PRO-KIT

SPORTLINE

ANTI-ROLL-KIT

PRO-SPACER

B12 PRO-KIT

B12 SPORTLINE

PRO-STREET-S

PRO-TRONIC

PRO-LIFT-KIT

ENGINEERED TO WIN.

PRODUKTKATALOG 2016
PRODUCT CATALOG 2016

eibach.com

BOSCH
Audi Sport
ROC
Rockenfeller
ORIS
SCHAEFFLER
DEKRA
99
ADAC
FAG
LUK
INA
AKRAPOVIC
SCHAEFFLER
Hankook
Castrol
cisco
Audi Sport
Official Supplier

Performance für Motorsport & Straße

Eibach - The Suspension Company oder auch:
Eibach gave springs a name!

Über viele erfolgreiche Jahrzehnte hat sich Eibach zur unbedingten Top-Marke im Motorsport weltweit entwickelt. Wir sind auf allen Erdteilen in praktisch allen Motorsportserien, in denen Fahrwerke genutzt werden, bekannt und präsent. Dabei betrachten wir den Motorsport als ideales Testfeld für alle weitergehenden Produktentwicklungen.

Performance for Motorsports and Street Performance

Eibach – The Suspension Company or:
Eibach gave springs a name!

Over many decades, Eibach has developed into the leading brand in motorsports all over the world. We are very well known and present in every corner of the world in practically ever motorsports series that uses suspension systems. Therefore we see motorsports as ideal proving ground for all product developments.

INHALT | *CONTENT*

THE LOOK THAT REALLY PERFORMS 6
PERFORMANCE GUIDE 7
PRO-KIT Performance Fahrwerksfedern | *Performance Springs* 8
SPORTLINE Performance Fahrwerksfedern Sport | *Sport Performance Springs* 8
PRO-LIFT-KIT Performance Höherlegung | *Performance Lift Springs* 9
PRO-SPACER Spurverbreiterungen | *Wheel Spacers* 9
ANTI-ROLL-KIT Performance Stabilisatoren | *Performance Stabilizer Bars* 10
B12 PRO-KIT Performance Komplettfahrwerke | *Performance Suspension System* 11
B12 SPORTLINE Performance Komplettfahrwerke Sport | *Sport Performance Suspension System* 12
PRO-STREET-S Gewindefahrwerke – höhenverstellbar | *Coil-Overs – Adjustable Ride Height* 13
PRO-TRONIC Elektronisches Fahrwerksmodul | *Electronic Suspension Module* 13
Fahrzeugschein-Zulassungsbescheinigung | *Registration Document-National Car License* 14
Eibach-Produktsuche Online | *Productfinder Online* 15-17
Typenliste | *Applications* 18-299

PRO-SPACER Systemerklärung | *System Description* 302-303
PRO-SPACER Kitbestückung | *Bill of Materials* 304-305
Anleitung zum Ausmessen eines Fahrzeuges zur Ermittlung der passenden PRO-SPACER | *Manual for Measurement of a Vehicle to Detect the Matching PRO-SPACER* 306-307
PRO-SPACER Checkliste | *Checklist* 308-309
Nummernschlüssel Radschrauben+Spurverbreiterungen | *Coding of Bolt Numbers+Wheel Spacers* 312-313
PRO-SPACER Schrauben | *Bolts* 314-317
PRO-SPACER-Liste | *Applications* 320-380
Hinweise | *Instructions* 382-387

THE LOOK THAT REALLY PERFORMS

Unsere Produkte beeinflussen nicht nur die Performance Ihres Fahrzeuges, sondern verschaffen ihm auch eine sportlichere Optik, Traktion & Attraktion. Nutzen Sie den vorher | nachher Vergleich und die Checkliste auf der gegenüberliegenden Seite, um das passende Eibach Produkt für Ihre individuellen Ansprüche zu finden.

A big part of suspension performance is the appearance that comes with it. The lower, more muscular, more athletic stance – makes any vehicle stand out from the rest of the pack – Traction & Attraction. Use the before and after guide below and the performance chart on the next page to determine which Eibach suspension kit fits your level of style and performance best.

vorher | Serienabstimmung

Hersteller entwickeln ihre Produkte, die auch dem weniger geübten Fahrer gerecht werden müssen. Dabei werden bewusst Sicherheitsreserven eingeplant, gerade im Hinblick auf Handling, Ansprechverhalten und Optik.

Before | Stock

The OEM's design their suspension to appeal to the average - less experienced drivers. They leave lots of room for improvements in handling, responsiveness and "get-rid-of-the-fender-gap" appearance that every enthusiast wants.

nachher | mit Pro-Kit Federn

Sie werden den Unterschied deutlich spüren. Handling, Bremsvermögen und Ansprechverhalten sind deutlich in Richtung Performance verbessert. Dazu eine sportlichere Optik im Vergleich zum Serienfahrwerk.

After | with Pro-Kit

You will instantly notice the significant performance-oriented improvement in handling, braking and responsiveness. The icing-on-the-cake is the "no-more-fender-gap" appearance and improved fuel economy. Who says you can't have your cake and eat it too? Hungry?

nachher | mit Sportline Federn

Für alle, die einen aggressiven Look bevorzugen und auch im Hinblick auf das Handling eine möglichst sportliche Abstimmung bevorzugen.

After | with Sportline

For those looking for a little bit more aggressiveness in handling and appearance, this is definitely the answer. All the impressive benefits of the legendary Pro-Kit with a little "hot sauce".

PERFORMANCE GUIDE

Produktlinie | ***Product Line***	**Produkt** | ***Product***	**Beschreibung** | ***Description***	**Fahreigenschaften** | ***Ride Quality***	**Straßenperformance** | ***Street Performance***	**Aggressive Performance** | ***Aggressive Performance***	**Straßen- und Rennsportperformance** | ***Street & Track***	**Tieferlegung** (fahrzeugabhängig) | ***Average Lowering*** ***(depending on application)***	**Höhenverstellbarkeit** | ***Adjustable Ride Height***
Federn | *Springs*	**PRO-KIT**	Der erste Schritt zur besseren Performance. Perfekt für den täglichen Gebrauch in Kombination mit guten Erstserien- oder Zubehördämpfern | *The first step in suspension performance. Perfect for the daily driver with good stock or aftermarket shocks.*	excellent, hoher Restkomfort | *Excellent*	✓			25-40 mm	
	SPORTLINE		sportlich, Motorsporthandling | *Sport | Performance*	✓	✓		30-50 mm	
Komplett-fahrwerke | *Springs + Shocks*	**B12 PRO-KIT**	Aufeinander abgestimmte Feder-Dämpfereinheit für eine optimale Performance und Fahrqualität | *Tuned performance spring and shock package for the performance you crave and the ride quality you need.*	excellent, hoher Restkomfort | *Excellent*	✓	✓	✓	25-40 mm	
	B12 SPORTLINE		sportlich, Motorsporthandling | *Sport | Performance*	✓	✓	✓	30-50 mm	
Spurver-breiterungen | *Wheel Spacers*	**PRO-SPACER**	Ideale Ergänzung zu unseren Federn oder Fahrwerken, um eine noch bessere Optik zu erzielen | *The Eibach Pro-Spacers give your vehicle the final line in styling*	optimiertes Fahrverhalten | *Optimized ride quality*	✓			5-30 mm (Breite | *Width*)	
Stabilisatoren | *Sway Bars*	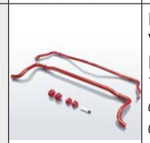 **ANTI-ROLL-KIT**	Der letzte Schliff zur Verbesserung der Fahreigenschaften | *The Eibach Anti-Roll-Kit allows critical fine-tuning of your car's handling characteristics*	Reduzierung der Seitenneigung | *Reduction of body roll*	✓	✓	✓		
Gewinde-fahrwerke | *Coil-Overs – Adjustable Ride Height*	**PRO-STREET-S**	Individuelle Anpassung der Tieferlegung durch Höhenverstellbarkeit | *Individual height adjustment*	Sportlich-komfortabel im Normalbereich; straff im Grenz-bereich | *Sporty and comfor-table in the normal range, appealingly taut in the threshold*	✓	✓	✓	20-70 mm	✓

More Video-Infos: eibach.com

PRO-KIT

Performance Fahrwerksfedern

- Weltweit das führende Federungssystem
- Entwickelt und getestet für die Kombination mit den Seriendämpfern
- Der erste Schritt in ein komplettes Sport-Fahrwerkssystem
- Absenkung des Fahrzeugschwerpunktes um bis zu 40 mm (CoG - Center of Gravity)
- Federauslegung für Traktion und Attraktion (Tieferlegung)
- Progressive Federungscharakteristik
- Performance Handling

Nächste Optimierungsstufen:

- Anti-Roll-Kit zur Kontrolle der Zentrifugalkräfte
- Bilstein Sportstoßdämpfer zum Upgrade auf B12 Pro-Kit

Performance Springs

- *World's leading Performance Suspension Spring System*
- *Engineered and tested to work perfectly with stock dampers*
- *First step towards a complete sport suspension system*
- *Lower center of gravity – lowers vehicle up to 40 mm*
- *Lowering = Traction + Attraction*
- *Progressive spring design*
- *Performance handling*

Next steps:

- *Anti-Roll-Kit to control body roll*
- *Bilstein sport dampers to upgrade to our B12 Pro-Kit*

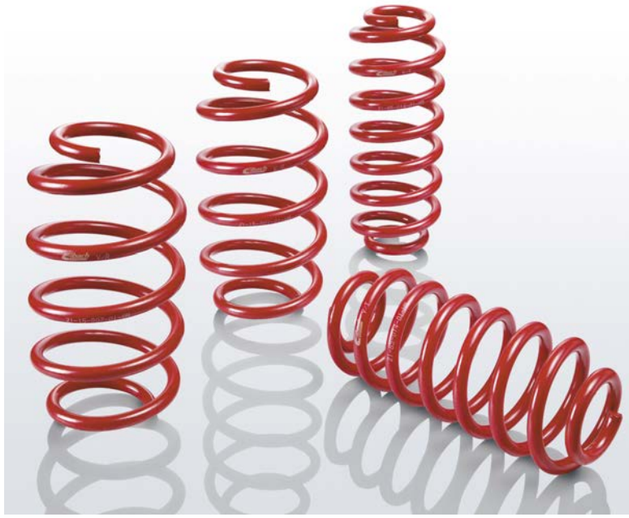

SPORTLINE

Performance Fahrwerksfedern Sport

- Sportfederung und Optik pur
- Absenkung des Fahrzeugs um bis zu 50 mm
- Optimale Attraktion durch Tieferlegung
- Motorsportähnliches Handling
- Progressive Federungscharakteristik
- Kombination mit Seriendämpfern zugelassen

Nächste Optimierungsstufen:

- Bilstein Sportstoßdämpfer zum Upgrade auf B12 Sportline
- Anti-Roll-Kit zur Kontrolle der Zentrifugalkräfte

Sport Performance Springs

- *Pure Sport Suspension Springs and Appearance*
- *Lower ride height - up to 50mm*
- *Optimal attraction through lowering*
- *Motorsport-like handling*
- *Progressive suspension characteristics*
- *Engineered and tested to work perfectly with stock dampers*

Next steps:

- *Anti-Roll-Kit to control body roll*
- *Bilstein sport dampers to upgrade to our B12 Pro-Kit*

PRO-LIFT-KIT

Performance Höherlegung

- Ein Federungssystem zwischen Street und Cross
- Mehr Bodenfreiheit bis zu 30 mm erlaubt moderate Ausflüge abseits geteerter Strassen
- Cross Feeling mit Serienkomfort

Performance Lift Springs

- A Spring-system between Street and Off-road
- More ground clearance allows for moderate off-roading - up to 30 mm
- Cross-country handling with excellent ride quality

PRO-SPACER

Spurverbreiterungen

- Verbreitern Sie Ihre Spur für besseres Handling und sportlichere Optik
- Gefertigt aus hochfestem Aluminium
- Formvollendete Passform durch geringste Fertigungstoleranzen, resultierend in ausgewogener Radbalance
- Dauerfestigkeit aller Typen nach modernsten Verfahren geprüft
- Hochwertiger Korrosionsschutz durch Spezial-beschichtung (Salzsprühtest nach DIN 50021)
- Hoher Gewichtsvorteil gegenüber Spurverbreiterungen aus Stahl

Wheel Spacers

- *Widen your stance – for better handling and appearance*
- *Made from high-tensile-strength aluminum alloy*
- *Exact fitment by using minimal production tolerances, resulting in exceptional wheel balance*
- *All applications tested in rigid durability- and fatigue tests*
- *High-grade corrosion protection through a special coating process (salt spray test according to DIN 50021)*
- *Significant weight advantage compared to wheel-spacers made from steel*

ANTI-ROLL-KIT

Performance Stabilisatoren

- Mittels der Stabilisatoren werden im Fahrwerkssystem die lateralen Kräfte, wie die Zentrifugalkräfte, kontrolliert
- Somit werden bei Kurvenfahrten und anderen schnellen Richtungswechseln die Wank- und Rollbewegungen – und somit die Seiten-neigungen – reduziert
- Das System setzt bei einseitiger Einfederung ein und addiert dann die Feder- und die Stabilisatoren-Raten
- Bei Kurvenfahrten und vergleichbaren Situationen wird durch die Einwirkung der Stabilisatoren der Schwerpunkt (CoG - Center of Gravity) des Fahrzeuges hin zum idealen Mittelpunkt zurückgeführt
- Ebenso werden die Lastunterschiede zwischen kurvenäußerem und kurveninnerem Rad verringert
- Dies alles resultiert dann im Idealfall zu einem Fahrgefühl – "ähnlich wie auf Schienen"
- Bei gleichzeitig beidseitiger Einfederung bleiben die Anti-Roll Bars neutral und die ursprüngliche Federungscharakteristik unverändert
- Mittels Stabilisatoren kann zudem das Eigen-lenkverhalten des Fahrzeugs – also Unter- bzw. Übersteuern – beeinflusst werden

Performance Stabilizer Bars

- *The suspension system anti-roll-bar helps control the lateral and centrifugal forces*
- *This reduces body roll while cornering or making fast directional changes*
- *The system uses the outside cornering spring rate along with the rate of the anti-roll-bar*
- *During cornering and performance driving, the CoG moves back to the ideal center of the vehicle as the anti-roll-bar transfer corner forces from the outer to the inner wheel*
- *This also reduces the load difference between the outer and inner cornering wheels*
- *The result: The ideal driving experience – „like driving on rails"*
- *During simultaneous suspension deflection, the anti-roll-bars remain neutral and the original suspension spring characteristics remain unchanged*
- *Anti-roll-bars can also influence the handling characteristics like oversteer or understeer*

B12 PRO-KIT

Performance Komplettfahrwerke

Jahrelang vom Markt erwartet, entwickeln Marktführer Federn und Dämpfer ein gemeinsames Sportfahrwerk

- Feder-/Dämpfer Technologie abgestimmt in Simultanem Engineering und umfangreichen Testversuchen
- Einzigartige Harmonie zwischen Feder und Dämpfer resultiert in einem weltweit herausragenden Fahrwerkssystem – mit progressiver Charakteristik
- Präzises Ansprechverhalten und exzellente Fahrdynamik
- Absenkung des Fahrzeugschwerpunktes (CoG – Center of Gravity) bis zu 40 mm (Tieferlegung – Traktion & Attraktion!)
- Eibach Pro-Kit Performance Fahrwerksfedern
- Bilstein Performance Dämpfer in Gasdruck-technologie, exakt abgestimmt
- Teilegutachten
- Made by Bilstein and Eibach

In Verbindung mit Eibach Pro-Tronic die perfekte Alternative beim Austausch von adaptiven Serien-fahrwerken.

Performance Suspension System

After a long-awaited anticipation - market leaders of springs and dampers develop a complete Performance Suspension System

- *Spring and Damper technology simultaneously engineered, tuned and extensivly tested*
- *Unparalled harmony between spring and damper – resulting in a world-class suspension system – with a progressive characteristic*
- *Precision responsive handling and excellent driving performance*
- *Lower center of gravity – up to 40 mm (Lowering = Traction + Attraction)*
- *Eibach Pro-Kit Performance Springs*
- *Bilstein Performance Dampers with gas pressure technology – perfectly matched*
- *Technical component report*
- *Made by Bilstein and Eibach*

For this purpose, we recommend using the Eibach Pro-Tronic – for deactivating the electronic damper control system.

B12 SPORTLINE

Performance Komplettfahrwerke Sport

Jahrelang vom Markt erwartet - die führenden Anbieter von Performance Federn und Performance Dämpfern entwickeln ein gemeinsames Sportfahrwerk

- Feder-/Dämpfer Technologie abgestimmt in Simultanem Engineering und umfangreichen Testversuchen
- Einzigartige Harmonie zwischen Feder und Dämpfer resultiert in einem weltweit herausragendem Fahrwerkssystem – mit progressiver Charakteristik
- Präzises Ansprechverhalten, exzellente Fahrdynamik und hohe Sicherheitsreserven
- Absenkung des Fahrzeugschwerpunktes (CoG – Center of Gravity) bis zu 50 mm (Tieferlegung – Traktion & Attraktion!)
- Eibach Sportline Fahrwerksfedern
- Bilstein Performance Dämpfer in Gasdrucktechnologie, exakt abgestimmt
- Teilegutachten
- Made by Bilstein and Eibach

Hierzu empfehlen wir den Einsatz von Eibach Pro-Tronic, zur Deaktivierung der elektronischen Dämpferregulierung.

Sport Performance Suspension System

After a long-awaited anticipation - market leaders of springs and dampers develop a complete Sport Performance Suspension System

- *Spring and Damper technology simultaneously engineered, tuned and extensivly tested*
- *Unparalled harmony between spring and damper – resulting in a world-class sport suspension system – with a progressive characteristic*
- *Precision responsive handling and excellent driving performance*
- *Lower center of gravity – up to 50 mm (Lowering = Traction + Attraction)*
- *Eibach Sportline Performance Springs*
- *Bilstein Performance Dampers with gas pressure technology – perfectly matched*
- *Technical component report*
- *Made by Bilstein and Eibach*

For this purpose, we recommend using the Eibach Pro-Tronic – for deactivating the electronic damper control system.

PRO-STREET-S

Gewindefahrwerke – höhenverstellbar

- Höhenverstellung von 20 bis 70 mm Fahrzeugabsenkung (je nach Fahrzeugtyp)
- Rostfreie Edelstahlausführung
- Sportlich-komfortabel im Normal-, ansprechend straff im Grenzbereich
- Federelemente angelehnt an unser ERS-Programm
- Verstellbereich gemäß Teilegutachten und komplette Dokumentation für einfache Handhabung
- In Verbindung mit Eibach Pro-Tronic die perfekte Alternative beim Austausch von adaptiven Serienfahrwerken

Coil-Overs – Adjustable Ride Height

- *Height adjustment from 20 to 70 mm vehicle lowering (depending upon vehicle type)*
- *Rust-free stainless steel design*
- *Sporty and comfortable in the normal range, appealingly taut in the threshold*
- *Spring elements drawing on our ERS program*
- *Certified adjustment area and complete documentation for an easy handling*

Combined with the Eibach Pro-Tronic it is the perfect alternative solution for replacing the adaptive OE suspension

PRO-TRONIC

Elektronisches Fahrwerksmodul

Beim technisch unbedenklichen Tausch von elektronisch regelbaren Dämpfern zu höherwertigen, individuellen Fahrwerkssystemen kann es zu Fehlermeldungen in der Anzeige kommen.

- Mit Pro-Tronic wird die serienmäßige Dämpferregulierung deaktiviert und somit eine Fehlermeldung verhindert
- Die Funktion anderer Steuer- und sonstiger Regelsysteme bleibt erhalten
- Pro-Tronic kann auch für Fahrwerke anderer Hersteller, inklusive OE Sportfahrwerke, verwendet werden

Electronic Suspension Module

Removing the standard electronic adjustable dampers in exchange for high-performance adjustable suspension systems is usually a simple process. However, during the installation, error message from the on-board computer may be experienced.

- *With Pro-Tronic, the standard damper regulation is deactivated and prevents an error message*
- *The functions of the controller and/or regulating systems are preserved and remain operational*
- *Pro-Tronic can also be used with suspension systems from other manufacturers, incl. OE Sport Suspension Systems*

FAHRZEUGSCHEIN - ZULASSUNGSBESCHEINIGUNG
REGISTRATION DOCUMENT - NATIONAL CAR LICENSE

Neu | *New* (Zulassungsbescheinigung | *National Car License*)

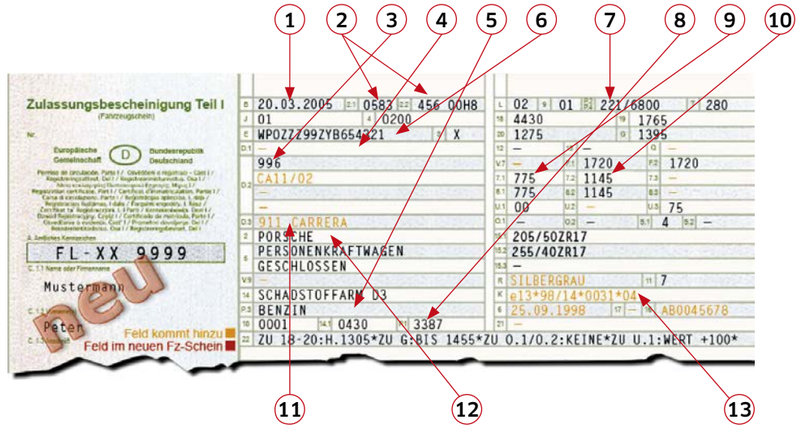

1. **Erstzulassung** | *Registration Date*
2. **Schlüsselnummer (KBA Nummer) 2.1 + 2.2**| *KBA Number 2.1 + 2.2*
3. **Typ | Version** | *Type | Version*
4. **Marke** | *Brand*
5. **Kraftstoffart** | *Fuel Type*
6. **Fahrgestell-Nr.** | *Chassis Number*
7. **Leistung in kW bei min $^{-1}$** | *kW min $^{-1}$*
8. **Hubraum** | *Cubic Capacity*
9. **Achslast Vorne** | *Front Axle Load*
10. **Achslast Hinten** | *Rear Axle Load*
11. **Handelsbezeichnung** | *Trade Name*
12. **Hersteller-Kurzbezeichnung** | *Manufacturer-Abbreviation*
13. **EG-Typgenehmigungsnummer** | *EG Type Approval Number*

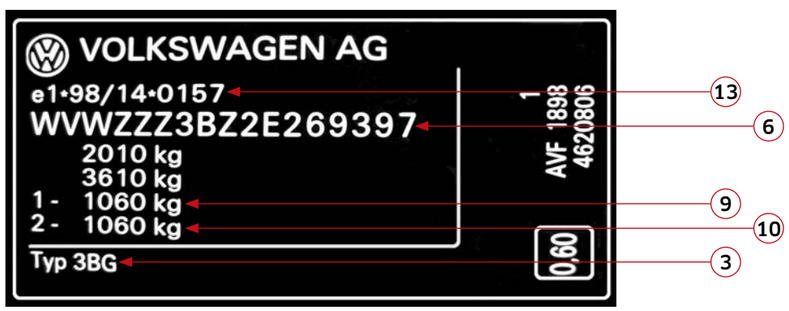

Eibach - PRODUKTSUCHE ONLINE
PRODUCTFINDER ONLINE

TecDoc CERTIFIED DATA SUPPLIER

Step 1

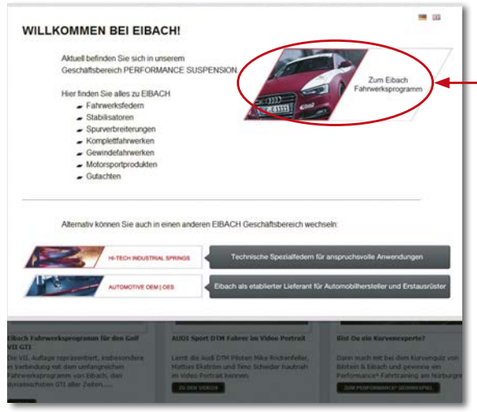

eibach.com
Zum Eibach Fahrwerksprogramm |
To Eibach Suspension Program

Step 2

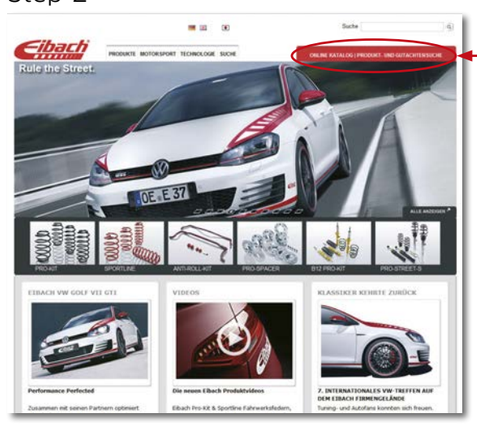

ONLINE KATALOG | PRODUKT- UND GUTACHTENSUCHE |
ONLINE CATALOG | PRODUCT & HOMOLOGATION SEARCH

Step 3

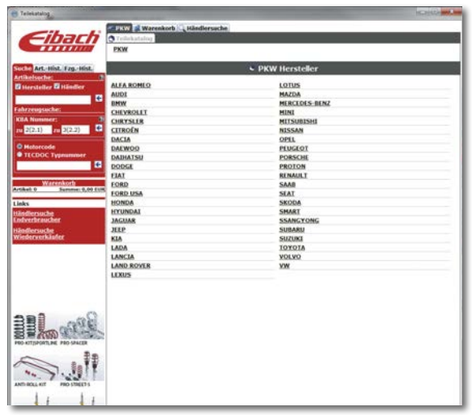

Online Katalog | *Catalog*:
eibach.com

- PRODUKTSUCHE ONLINE
PRODUCTFINDER ONLINE

A) FAHRZEUGSUCHE NACH SCHLÜSSELNUMMER | KBA-NUMMER |
VEHICLE SEARCH BY KEY NUMBER | KBA-NUMBER

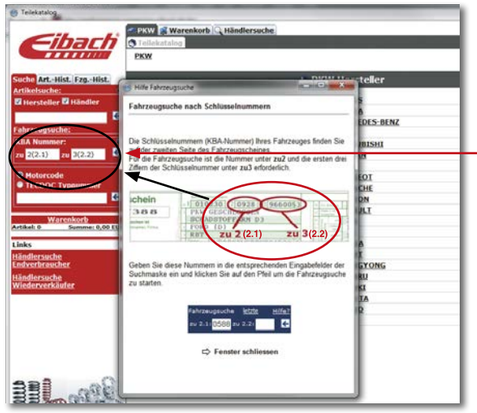

Eintragen der KBA-Nummer |
Registering the KBA-Number

B) FAHRZEUGSUCHE DIRKET IM TEILEKATALOG ÜBER DEN HERSTELLER |
VEHICLE SEARCH DIRECTLY IN PARTS CATALOG OF MANUFACTURER

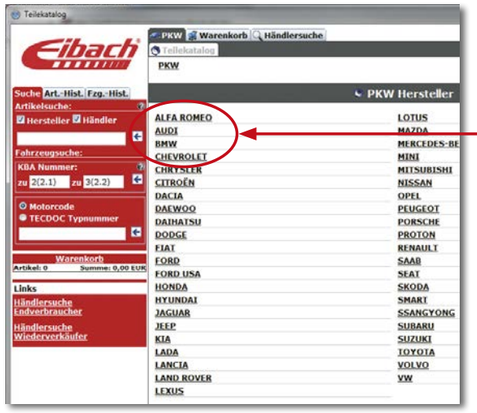

Auswahl: PKW Hersteller - am Beispiel Audi |
Selection: Passenger car Manufacturer - example of Audi

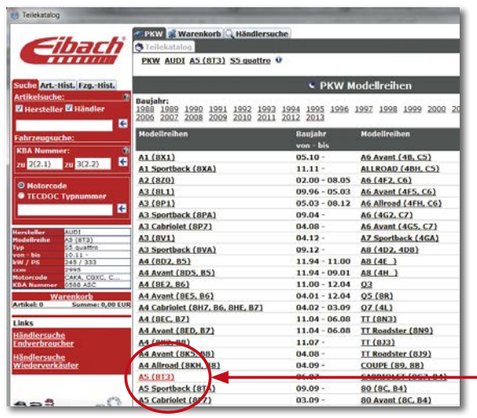

Auswahl: PKW Modellreihen |
Selection: Passenger car Model series

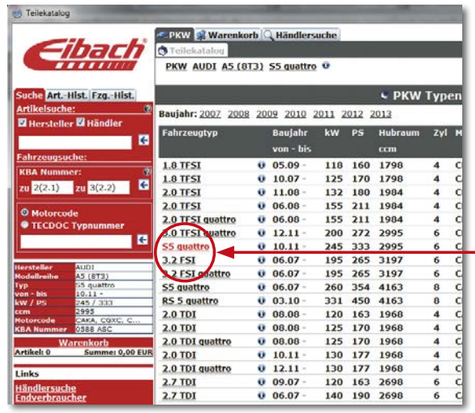

Auswahl: PKW Typen |
Selection: Passenger car Types

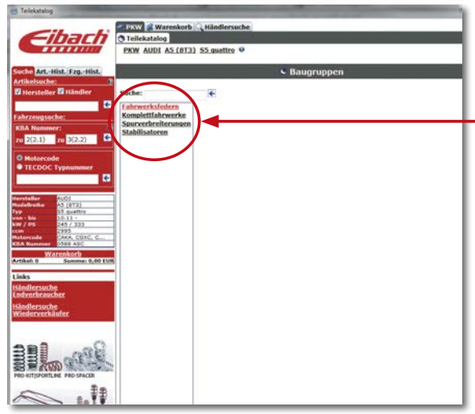

Auswahl: Baugruppe |
Selection: Product groups

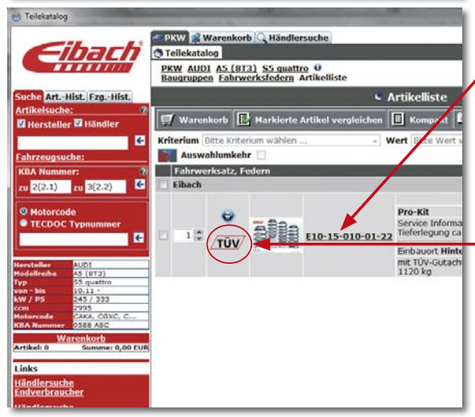

Auswahl: Artikelliste |
Selection: Parts list

Gutachten | ABE | *Homologation*

Detailansicht | *Details*

ALFA ROMEO

Modell *Model*	Baujahr *Year*	Achslast Vorne kg *Front Axle Load kg*	Achslast Hinten kg *Rear Axle Load kg*	Artikel-Nr. *Part-No.*	Hinweise *Notes*	ab Nachtrag ...xx BE *from suppl. ...xx of type approval*	bis Nachtrag ...xx BE *to suppl. ...xx of type approval*	ca. Tieferl. Vorne mm *ca. Lowering Front mm*	ca. Tieferl. Hinten mm *ca. Lowering Rear mm*	Ø Vorne mm *Ø Front mm*	Ø Hinten mm *Ø Rear mm*	Verstellbarkeit Vorne *Adjustable Front*	Verstellbarkeit Hinten *Adjustable Rear*	Ersatzteilbez. Vorne *Spare Part Marking Front*	Ersatzteilbez. Hinten *Spare Part Marking Rear*	Gutachten *Homologation*
75 (162B)																
Pro-Kit (Performance Fahrwerksfedern | *Performance Springs*)																
1.6, 1.6 KAT, 1.8, 1.8 Turbo, 1.8 Turbo i.e., 2.0, 2.0 T.S KAT, 2.0 T.S., 2.0 TD, 2.4 TD, 2.5 V6, 2.5 V6 KAT, 3.0 V6, 3.0 V6 KAT *1.6, 1.6 CAT, 1.8, 1.8 Turbo, 1.8 Turbo i.e., 2.0, 2.0 T.S CAT, 2.0 T.S., 2.0 TD, 2.4 TD, 2.5 V6, 2.5 V6 CAT, 3.0 V6, 3.0 V6 CAT*	05.85 - 12.92	850	930	E1004-120	A, 18, 20			30	30					Drehstabverstellung *torsion bar*	F1004002	
145 (930)																
Pro-Kit (Performance Fahrwerksfedern | *Performance Springs*)																
1.4 i.e., 1.4 i.e. 16V T.S., 1.6 i.e., 1.6 i.e. 16V T.S., 1.7 i.e. 16V, 1.8 i.e. 16V T.S., 1.9 TD	07.94 - 01.01	950	900	E1016-240	A, 18, 20			30	30					F1016001	F3008002	T
1.4 i.e. 16V T.S., 1.6 16V T.S., 1.6 i.e. 16V T.S., 1.8 i.e. 16V, 1.8 i.e. 16V T.S., 1.9 JTD, 1.9 TD, 2.0 16V Quadrifoglio, 2.0 16V T.S.	02.97 - 01.01	950	900	E1019-140	A, 18, 20			30	30					F1013101	F3008002	T
Anti-Roll-Kit (Performance Stabilisatoren | *Performance Sway Bars*)																
1.4 i.e., 1.4 i.e. 16V T.S., 1.6 16V T.S., 1.6 i.e., 1.6 i.e. 16V T.S., 1.7 i.e. 16V, 1.8 i.e. 16V, 1.8 i.e. 16V T.S., 1.9 JTD, 1.9 TD, 2.0 16V Quadrifoglio, 2.0 16V T.S.	07.94 - 01.01			E1013-320	A, 18, 20, 22, 45					26	22	nicht verstellbar *not adjustable*	nicht verstellbar *not adjustable*	AS1013320VA	AS1013320HA	T
146 (930)																
Pro-Kit (Performance Fahrwerksfedern | *Performance Springs*)																
1.4 i.e., 1.4 i.e. 16V T.S., 1.6 i.e., 1.6 i.e. 16V T.S., 1.7 i.e. 16V, 1.8 i.e. 16V T.S., 1.9 TD	12.94 - 01.01	950	900	E1016-240	A, 18, 20			30	30					F1016001	F3008002	T
1.4 i.e. 16V T.S., 1.6 16V T.S., 1.6 i.e. 16V T.S., 1.8 i.e. 16V T.S., 1.9 JTD, 1.9 TD, 2.0 16V Quadrifoglio, 2.0 16V T.S.	02.97 - 01.01	950	900	E1019-140	A, 18, 20			30	30					F1013101	F3008002	T
Anti-Roll-Kit (Performance Stabilisatoren | *Performance Sway Bars*)																
1.4 i.e., 1.4 i.e. 16V T.S., 1.6 16V T.S., 1.6 i.e., 1.6 i.e. 16V T.S., 1.7 i.e. 16V, 1.8 i.e. 16V T.S., 1.9 JTD, 1.9 TD, 2.0 16V Quadrifoglio, 2.0 16V T.S.	12.94 - 01.01			E1013-320	A, 18, 20, 22, 45					26	22	nicht verstellbar *not adjustable*	nicht verstellbar *not adjustable*	AS1013320VA	AS1013320HA	T
147 (937)																
Pro-Kit (Performance Fahrwerksfedern | *Performance Springs*)																
1.6 16V T.SPARK, 1.6 16V T.SPARK ECO, 2.0, 2.0 16V T.SPARK	01.01 - 03.10	980	980	E10-10-001-01-22	A, 18, 20			30	30					F11-10-001-01-VA	F11-10-001-01-HA	T
1.9 JTD, 1.9 JTD 16V, 1.9 JTDM, 1.9 JTDM 16V, 1.9 JTDM 8V, 3.2 GTA	11.00 - 03.10	1040	980	E10-10-001-02-22	A, 18, 20			30	30					F1020001	F11-10-001-01-HA	T
Sportline (Performance Fahrwerksfedern Sport | *Sport Performance Springs*)																
1.6 16V T.SPARK, 1.6 16V T.SPARK ECO, 1.9 JTD, 1.9 JTD 16V, 1.9 JTDM, 1.9 JTDM 16V, 1.9 JTDM 8V, 2.0 16V T.SPARK	01.01 - 03.10	1040	980	E20-10-001-02-22	A, 18, 20			45-50	40					F21-10-001-01-VA	F21-10-001-01-HA	T
Anti-Roll-Kit (Performance Stabilisatoren | *Performance Sway Bars*)																
1.6 16V T.SPARK, 1.6 16V T.SPARK ECO, 1.9 JTD, 1.9 JTD 16V, 1.9 JTDM, 1.9 JTDM 16V, 1.9 JTDM 8V, 2.0, 2.0 16V T.SPARK, 3.2 GTA	11.00 - 03.10			E40-10-001-01-11	A, 18, 20, 22, 45					26	18	nicht verstellbar *not adjustable*	2-fach verstellbar *2-way adjustable*	AS1020320VA	AS41-10-001-01-HA	T
B12 Pro-Kit (Performance Komplettfahrwerke | *Performance Springs+Shocks*)																
1.6 16V T.SPARK, 1.6 16V T.SPARK ECO, 2.0, 2.0 16V T.SPARK	01.01 - 03.10	980	980	E90-10-001-01-22	A, 18, 20, 78, 161			30	30					F11-10-001-01-VA	F11-10-001-01-HA	T
1.9 JTD, 1.9 JTD 16V, 1.9 JTDM, 1.9 JTDM 16V, 1.9 JTDM 8V, 3.2 GTA	11.00 - 03.10	1040	980	E90-10-001-02-22	A, 18, 20, 78, 161			30	30					F1020001	F11-10-001-01-HA	T
B12 Sportline (Performance Komplettfahrwerke Sport | *Sport Performance Springs+Shocks*)																
1.6 16V T.SPARK, 1.6 16V T.SPARK ECO, 1.9 JTD, 1.9 JTD 16V, 1.9 JTDM, 1.9 JTDM 16V, 1.9 JTDM 8V, 2.0 16V T.SPARK	11.00 - 03.10	1040	980	E95-10-001-02-22	A, 18, 20, 78, 161			45-50	40					F21-10-001-01-VA	F21-10-001-01-HA	T
Pro-Street-S (Gewindefahrwerke - höhenverstellbar | *Coil-Overs-Adjustable Ride Hight*)																
1.6 16V T.SPARK, 1.6 16V T.SPARK ECO, 1.9 JTD, 1.9 JTD 16V, 1.9 JTDM, 1.9 JTDM 16V, 1.9 JTDM 8V, 2.0, 2.0 16V T.SPARK	11.00 - 03.10	990	980	PSS65-10-001-01-22	A, 23, 45, 160			35-60	35-60							T
3.2 GTA	02.03 - 03.10	1040	980	PSS65-10-001-02-22	A, 23, 45, 160			20-55	20-55							T
155 (167)																
Pro-Kit (Performance Fahrwerksfedern | *Performance Springs*)																
1.6 16V T.S., 1.7 T.S., 1.7 T.S. 16V, 1.8 T.S., 1.8 T.S. Sport, 2.0 T.S., 2.0 T.S. 16V	01.92 - 12.97	965	965	E1013-240	A, 18, 20			35	30					F1013101	F1013002	T
Anti-Roll-Kit (Performance Stabilisatoren | *Performance Sway Bars*)																
1.6 16V T.S., 1.7 T.S., 1.7 T.S. 16V, 1.8 T.S., 1.8 T.S. Sport, 1.9 TD, 2.0 T.S., 2.0 T.S. 16V, 2.5 TD, 2.5 V6	01.92 - 12.97			E1013-320	A, 18, 20, 22, 45					26	22	nicht verstellbar *not adjustable*	nicht verstellbar *not adjustable*	AS1013320VA	AS1013320HA	T
156 (932)																
Pro-Kit (Performance Fahrwerksfedern | *Performance Springs*)																
1.6 16V T.SPARK, 1.8 16V T.SPARK, 2.0 16V T.SPARK, 2.0 JTS, 2.0 Twin Spark	09.97 - 09.05	1060	1000	E1020-140	A, 18, 20			30	30					F1020001	F1020002	T
1.9 JTD, 1.9 JTD 16V, 2.4 JTD, 2.5 V6 24V, 3.2 GTA	09.97 - 09.05	1060	1000	E1021-140	A, 18, 20			30	30					F1021001	F1020002	T
Sportline (Performance Fahrwerksfedern Sport | *Sport Performance Springs*)																
1.9 JTD, 1.9 JTD 16V, 2.4 JTD, 2.5 V6 24V, 3.2 GTA	09.97 - 09.05	1060	980	E20-10-002-02-22	A, 18, 20			45-50	45-50					F21-10-002-02-VA	F21-10-002-01-HA	T
Anti-Roll-Kit (Performance Stabilisatoren | *Performance Sway Bars*)																
1.6 16V T.SPARK, 1.8 16V T.SPARK, 1.9 JTD, 1.9 JTD 16V, 2.0 16V T.SPARK, 2.0 JTS, 2.0 Twin Spark, 2.4 JTD, 2.5 V6 24V, 3.2 GTA	09.97 - 09.05			E1020-320	A, 18, 20, 22, 45					26	18	nicht verstellbar *not adjustable*	2-fach verstellbar *2-way adjustable*	AS1020320VA	AS1020320HA	T
B12 Pro-Kit (Performance Komplettfahrwerke | *Performance Springs+Shocks*)																
1.6 16V T.SPARK, 1.8 16V T.SPARK, 2.0 16V T.SPARK, 2.0 JTS, 2.0 Twin Spark	09.97 - 09.05	1060	1000	E90-10-002-01-22	A, 18, 20, 78, 161			30	30					F1020001	F1020002	T
1.9 JTD, 1.9 JTD 16V, 2.4 JTD, 2.5 V6 24V, 3.2 GTA	09.97 - 09.05	1060	1000	E90-10-002-02-22	A, 18, 20, 78, 161			30	30					F1021001	F1020002	T
B12 Sportline (Performance Komplettfahrwerke Sport | *Sport Performance Springs+Shocks*)																
1.9 JTD, 1.9 JTD 16V, 2.4 JTD, 2.5 V6 24V, 3.2 GTA	09.97 - 09.05	1060	980	E95-10-002-02-22	A, 18, 20, 78, 161			45-50	45-50					F21-10-002-02-VA	F21-10-002-01-HA	T
Pro-Street-S (Gewindefahrwerke - höhenverstellbar | *Coil-Overs-Adjustable Ride Hight*)																
1.6 16V T.SPARK, 1.8 16V T.SPARK, 1.9 JTD, 1.9 JTD 16V, 2.0 16V T.SPARK, 2.0 JTS, 2.0 Twin Spark, 2.4 JTD, 2.5 V6 24V	09.97 - 09.05	965	980	PSS65-10-002-01-22	A, 23, 45, 160			35-65	35-65							T
1.6 16V T.SPARK, 1.8 16V T.SPARK, 1.9 JTD, 1.9 JTD 16V, 2.0 16V T.SPARK, 2.0 JTS, 2.0 Twin Spark, 2.4 JTD, 2.5 V6 24V, 3.2 GTA	09.97 - 09.05	1060	980	PSS65-10-002-02-22	A, 23, 45, 160			35-65	35-65							T

ALFA ROMEO

Modell	Baujahr	Achslast Vorne kg	Achslast Hinten kg	Artikel-Nr.	Hinweise	ab Nachtrag ...xx BE	bis Nachtrag ...xx BE	ca. Tieferl. Vorne mm	ca. Tieferl. Hinten mm	Ø Vorne mm	Ø Hinten mm	Verstellbarkeit Vorne	Verstellbarkeit Hinten	Ersatzteilbez. Vorne	Ersatzteilbez. Hinten	Gutachten
Model	*Year*	*Front Axle Load kg*	*Rear Axle Load kg*	*Part-No.*	*Notes*	*from suppl. ...xx of type approval*	*to suppl. ...xx of type approval*	*ca. Lowering Front mm*	*ca. Lowering Rear mm*	*Ø Front mm*	*Ø Rear mm*	*Adjustable Front*	*Adjustable Rear*	*Spare Part Marking Front*	*Spare Part Marking Rear*	*Homologation*
156 Sportwagon (932)																
Pro-Kit (Performance Fahrwerksfedern | *Performance Springs*)																
1.6 16V T.SPARK, 1.6 16V T.SPARK., 1.8 16V T.SPARK, 2.0, 2.0 16V T.SPARK, 2.0 JTS	09.97 - 05.06	1060		E1020-120	A, 20			30						F1020001		T
1.9 JTD, 1.9 JTD 16V, 2.4 JTD, 2.5 V6 24V, 3.2 GTA	05.00 - 05.06	1060		E1021-120	A, 20			30						F1021001		T
1.6 16V T.SPARK, 1.6 16V T.SPARK., 1.8 16V T.SPARK, 2.0, 2.0 16V T.SPARK, 2.0 JTS	09.97 - 05.06	1060	1000	E1020-140	A, 18, 20			30	30					F1020001	F1020002	T
1.9 JTD, 1.9 JTD 16V, 2.4 JTD, 2.5 V6 24V, 3.2 GTA	05.00 - 05.06	1060	1000	E1021-140	A, 18, 20			30	30					F1021001	F1020002	T
Sportline (Performance Fahrwerksfedern Sport | *Sport Performance Springs*)																
1.9 JTD, 1.9 JTD 16V, 2.4 JTD, 2.5 V6 24V, 3.2 GTA	05.00 - 05.06	1060	980	E20-10-002-02-22	A, 18, 20			45-50	45-50					F21-10-002-02-VA	F21-10-002-01-HA	T
Anti-Roll-Kit (Performance Stabilisatoren | *Performance Sway Bars*)																
1.6 16V T.SPARK, 1.6 16V T.SPARK., 1.8 16V T.SPARK, 1.9 JTD, 1.9 JTD 16V, 2.0, 2.0 16V T.SPARK, 2.0 JTS, 2.4 JTD, 2.5 V6 24V, 3.2 GTA	09.97 - 05.06			E1020-320	A, 18, 20, 22, 45					26	18	nicht verstellbar *not adjustable*	2-fach verstellbar *2-way adjustable*	AS1020320VA	AS1020320HA	T
B12 Pro-Kit (Performance Komplettfahrwerke | *Performance Springs+Shocks*)																
1.6 16V T.SPARK., 1.8 16V T.SPARK, 2.0 16V T.SPARK, 2.0 JTS	05.00 - 05.06	1060	1000	E90-10-002-01-22	A, 18, 20, 78, 161			30	30					F1020001	F1020002	T
1.9 JTD, 1.9 JTD 16V, 2.4 JTD, 2.5 V6 24V, 3.2 GTA	05.00 - 05.06	1060	1000	E90-10-002-02-22	A, 18, 20, 78, 161			30	30					F1021001	F1020002	T
B12 Sportline (Performance Komplettfahrwerke Sport | *Sport Performance Springs+Shocks*)																
1.9 JTD, 1.9 JTD 16V, 2.4 JTD, 2.5 V6 24V, 3.2 GTA	05.00 - 05.06	1060	980	E95-10-002-02-22	A, 18, 20, 78, 161			45-50	45-50					F21-10-002-02-VA	F21-10-002-01-HA	T
Pro-Street-S (Gewindefahrwerke - höhenverstellbar | *Coil-Overs-Adjustable Ride Hight*)																
1.6 16V T.SPARK, 1.6 16V T.SPARK., 1.8 16V T.SPARK, 1.9 JTD, 1.9 JTD 16V, 1.9 JTD 16V Q4, 2.0, 2.0 16V T.SPARK, 2.0 JTS, 2.4 JTD, 2.5 V6 24V	09.97 - 05.06	965	980	PSS65-10-002-01-22	A, 23, 45, 160			35-65	35-65							T
1.6 16V T.SPARK, 1.6 16V T.SPARK., 1.8 16V T.SPARK, 1.9 JTD, 1.9 JTD 16V, 1.9 JTD 16V Q4, 2.0, 2.0 16V T.SPARK, 2.0 JTS, 2.4 JTD, 2.5 V6 24V, 3.2 GTA	09.97 - 05.06	1060	980	PSS65-10-002-02-22	A, 23, 45, 160			35-65	35-65							T
159 (939)																
Pro-Kit (Performance Fahrwerksfedern | *Performance Springs*)																
1.8 MPI, 1.8 TBi, 1.9 JTDM 16V, 1.9 JTDM 8V, 1.9 JTS, 2.0 JTDM, 2.2 JTS	09.05 - 11.11	1200	1100	E10-10-005-01-22	A, 18, 20			30-35	30-35					F11-10-005-01-VA	F11-10-005-01-HA	T
2.4 JTDM, 3.2 JTS	09.05 - 11.11	1300	1100	E10-10-005-02-22	A, 18, 20			30-35	30-35					F11-10-005-02-VA	F11-10-005-01-HA	T
2.4 JTDM Q4, 3.2 JTS Q4	12.05 - 11.11	1300	1100	E10-10-005-05-22	A, 18			30-35	30					F11-10-005-02-VA	F11-10-005-05-HA	T
Anti-Roll-Kit (Performance Stabilisatoren | *Performance Sway Bars*)																
1.8 MPI, 1.8 TBi, 1.9 JTDM 16V, 1.9 JTDM 8V, 1.9 JTS, 2.0 JTDM, 2.2 JTS, 2.4 JTDM, 3.2 JTS	09.05 - 11.11			E40-10-005-01-11	A, 18, 20, 22, 45					25	24	2-fach verstellbar *2-way adjustable*	2-fach verstellbar *2-way adjustable*	AS41-10-005-01-VA	AS41-10-005-01-HA	T
B12 Pro-Kit (Performance Komplettfahrwerke | *Performance Springs+Shocks*)																
1.8 MPI, 1.8 TBi, 1.9 JTDM 16V, 1.9 JTDM 8V, 1.9 JTS, 2.0 JTDM, 2.2 JTS	09.05 - 11.11	1200	1100	E90-10-005-01-22	A, 18, 20, 21, 78, 161			30-35	30-35					F11-10-005-01-VA	F11-10-005-01-HA	T
2.4 JTDM, 3.2 JTS	09.05 - 11.11	1300	1100	E90-10-005-02-22	A, 18, 20, 21, 78, 161			30-35	30-35					F11-10-005-02-VA	F11-10-005-01-HA	T
2.4 JTDM Q4, 3.2 JTS Q4	12.05 - 11.11	1300	1100	E90-10-005-05-22	A, 18, 78, 161			30-35	30					F11-10-005-02-VA	F11-10-005-05-HA	T
Pro-Street-S (Gewindefahrwerke - höhenverstellbar | *Coil-Overs-Adjustable Ride Hight*)																
1.9 JTDM 16V, 1.9 JTDM 8V, 1.9 JTS, 2.2 JTS	09.05 - 11.11	1250	1100	PSS65-10-005-01-22	A, 18, 24, 45, 160			25-55	25-55							T
2.4 JTDM, 2.4 JTDM Q4, 3.2 JTS, 3.2 JTS Q4	09.05 - 11.11	1300	1100	PSS65-10-005-02-22	A, 18, 24, 45, 160			25-55	25-55							T
159 Sportwagon (939)																
Pro-Kit (Performance Fahrwerksfedern | *Performance Springs*)																
1.8 MPI, 1.8 TBi, 1.9 JTDM 16V, 1.9 JTDM 8V, 1.9 JTS, 2.0 JTDM, 2.2 JTS	03.06 - 11.11	1200	1100	E10-10-005-03-22	A, 18, 20			30-35	25-30					F11-10-005-01-VA	F11-10-005-05-HA	T
2.4 JTDM, 3.2 JTS	03.06 - 11.11	1300	1100	E10-10-005-04-22	A, 18, 20			30-35	25-30					F11-10-005-02-VA	F11-10-005-05-HA	T
2.4 JTDM Q4, 3.2 JTS Q4	03.06 - 11.11	1300	1100	E10-10-005-06-22	A, 18			30-35	30					F11-10-005-02-VA	F11-10-005-05-HA	T
Anti-Roll-Kit (Performance Stabilisatoren | *Performance Sway Bars*)																
1.8 MPI, 1.8 TBi, 1.9 JTDM 16V, 1.9 JTDM 8V, 1.9 JTS, 2.0 JTDM, 2.2 JTS, 2.4 JTDM, 3.2 JTS	03.06 - 11.11			E40-10-005-01-11	A, 18, 20, 22, 45					25	24	2-fach verstellbar *2-way adjustable*	2-fach verstellbar *2-way adjustable*	AS41-10-005-01-VA	AS41-10-005-01-HA	T
B12 Pro-Kit (Performance Komplettfahrwerke | *Performance Springs+Shocks*)																
1.8 MPI, 1.8 TBi, 1.9 JTDM 16V, 1.9 JTDM 8V, 1.9 JTS, 2.0 JTDM, 2.2 JTS	03.06 - 11.11	1200	1100	E90-10-005-03-22	A, 18, 20, 21, 78, 161			30-35	25-30					F11-10-005-01-VA	F11-10-005-05-HA	T
2.4 JTDM, 3.2 JTS	03.06 - 11.11	1300	1100	E90-10-005-04-22	A, 18, 20, 21, 78, 161			30-35	25-30					F11-10-005-02-VA	F11-10-005-05-HA	T
2.4 JTDM Q4, 3.2 JTS Q4	03.06 - 11.11	1300	1100	E90-10-005-06-22	A, 18, 78, 161			30-35	30					F11-10-005-02-VA	F11-10-005-05-HA	T
Pro-Street-S (Gewindefahrwerke - höhenverstellbar | *Coil-Overs-Adjustable Ride Hight*)																
1.9 JTDM 16V, 1.9 JTDM 8V, 1.9 JTS, 2.2 JTS	03.06 - 11.11	1250	1100	PSS65-10-005-03-22	A, 18, 24, 45, 160			35-65	35-65							T
2.4 JTDM, 2.4 JTDM Q4, 3.2 JTS, 3.2 JTS Q4	03.06 - 11.11	1300	1100	PSS65-10-005-04-22	A, 18, 24, 45, 160			35-65	35-65							T
166 (936)																
Pro-Kit (Performance Fahrwerksfedern | *Performance Springs*)																
2.0 T.Spark, 2.0 V6, 2.4 JTD, 2.5 V6 24V, 3.0 V6 24V, 3.2 V6 24V	09.98 - 06.07	1100	1100	E1023-140	A, 18, 20			30	30					F1022101	F1022002	T
4C (960)																
Pro-Kit (Performance Fahrwerksfedern | *Performance Springs*)																
1.8 TBi	03.13 -	490	755	E10-10-012-01-22	A, 18, 20			15	20					F11-10-012-01-FA	F11-10-012-01-RA	T
BRERA																
Pro-Kit (Performance Fahrwerksfedern | *Performance Springs*)																
2.4 JTDM 20V, 3.2 JTS	01.06 -	1300	1100	E10-10-006-03-22	A, 18, 20			25-30	18-25					F11-10-005-02-VA	F11-10-006-01-HA	T
2.4 JTDM 20V, 3.2 JTS Q4	01.06 -	1300	1100	E10-10-006-02-22	A, 18			25-30	18-25					F11-10-005-02-VA	F11-10-005-05-HA	T
B12 Pro-Kit (Performance Komplettfahrwerke | *Performance Springs+Shocks*)																
2.4 JTDM 20V, 3.2 JTS	01.06 -	1300	1100	E90-10-006-03-22	A, 18, 20, 21, 73, 78, 161			25-30	18-25					F11-10-005-02-VA	F11-10-006-01-HA	T
2.4 JTDM 20V, 3.2 JTS Q4	01.06 -	1300	1100	E90-10-006-02-22	A, 18, 78, 161			25-30	18-25					F11-10-005-02-VA	F11-10-005-05-HA	T

ALFA ROMEO

Modell *Model*	Baujahr *Year*	Achslast Vorne kg *Front Axle Load kg*	Achslast Hinten kg *Rear Axle Load kg*	Artikel-Nr. *Part-No.*	Hinweise *Notes*	ab Nachtrag ...xx BE *from suppl. ...xx of type approval*	bis Nachtrag ...xx BE *to suppl. ...xx of type approval*	ca. Tieferl. Vorne mm *ca. Lowering Front mm*	ca. Tieferl. Hinten mm *ca. Lowering Rear mm*	Ø Vorne mm *Ø Front mm*	Ø Hinten mm *Ø Rear mm*	Verstellbarkeit Vorne *Adjustable Front*	Verstellbarkeit Hinten *Adjustable Rear*	Ersatzteilbez. Vorne *Spare Part Marking Front*	Ersatzteilbez. Hinten *Spare Part Marking Rear*	Gutachten *Homologation*
BRERA																
Pro-Street-S (Gewindefahrwerke - höhenverstellbar | *Coil-Overs-Adjustable Ride Hight*)																
2.2 JTS	01.06 -	1250	1100	PSS65-10-005-01-22	A, 18, 24, 45, 160			25-55	25-55							T
2.4 JTDM 20V, 3.2 JTS, 3.2 JTS Q4	01.06 -	1300	1100	PSS65-10-005-02-22	A, 18, 24, 45, 160			25-55	25-55							T
GIULIETTA (940)																
Pro-Kit (Performance Fahrwerksfedern | *Performance Springs*)																
1.6 JTDM, 1.8 TBi, 2.0 JTDM	04.10 -	1100	850	E10-10-009-01-22	A, 18, 20			30-35	25					F11-10-009-01-VA	F11-10-009-01-HA	T
1.4 TB	04.10 -	1100	850	E10-10-009-03-22	A, 18, 20			30-35	25					F11-10-009-03-VA	F11-10-009-01-HA	T
B12 Pro-Kit (Performance Komplettfahrwerke | *Performance Springs+Shocks*)																
1.6 JTDM, 1.8 TBi, 2.0 JTDM	04.10 -	1100	850	E90-10-009-01-22	A, 18, 20, 78, 161			30-35	25					F11-10-009-01-VA	F11-10-009-01-HA	T
1.4 TB	04.10 -	1100	850	E90-10-009-03-22	A, 18, 20, 78, 161			30-35	25					F11-10-009-03-VA	F11-10-009-01-HA	T
Pro-Street-S (Gewindefahrwerke - höhenverstellbar | *Coil-Overs-Adjustable Ride Hight*)																
1.4 TB, 1.6 JTDM, 1.8 TBi, 2.0 JTDM	04.10 -	1100	850	PSS65-10-009-01-22	A, 18, 24, 45, 160			35-55	30-50							T
GT (937)																
Pro-Kit (Performance Fahrwerksfedern | *Performance Springs*)																
1.8 TS, 1.9 JTD, 2.0 JTS	11.03 - 09.10	990	980	E10-10-004-01-22	A, 18, 20			25	25					F1020001	F1020002	T
3.2 GTA	11.03 - 09.10	1040	980	E10-10-004-02-22	A, 18, 20			20	25					F1021001	F1020002	T
Anti-Roll-Kit (Performance Stabilisatoren | *Performance Sway Bars*)																
1.8 TS, 1.9 JTD, 2.0 JTS, 3.2 GTA	11.03 - 09.10			E1020-320	A, 18, 20, 22, 45					26	18	nicht verstellbar *not adjustable*	2-fach verstellbar *2-way adjustable*	AS1020320VA	AS1020320HA	T
B12 Pro-Kit (Performance Komplettfahrwerke | *Performance Springs+Shocks*)																
1.8 TS, 1.9 JTD, 2.0 JTS	11.03 - 09.10	990	980	E90-10-004-01-22	A, 18, 20, 78, 161			25	25					F1020001	F1020002	T
3.2 GTA	11.03 - 09.10	1040	980	E90-10-004-02-22	A, 18, 20, 78, 161			20	25					F1021001	F1020002	T
GTV (916C_)																
Pro-Kit (Performance Fahrwerksfedern | *Performance Springs*)																
2.0 V6 Turbo, 3.0 V6 24V	06.95 - 10.05	1060	1000	E1018-140	A, 18, 20			20	20					F1018001	F1018102	T
1.8 16V, 2.0 JTS, 2.0 T.SPARK 16V, 2.0 V6 Turbo, 3.2 V6 24V	06.95 - 10.05	1060	1000	E1024-140	A, 18, 20			20	20					F1024001	F1018102	T
MITO (955)																
Pro-Kit (Performance Fahrwerksfedern | *Performance Springs*)																
1.3 JTDM, 1.4, 1.4 TB, 1.4 Turbo	09.08 -	955	850	E10-10-008-01-22	A, 18, 20			30	30					F11-10-008-01-VA	F11-10-008-01-HA	T
1.6 JTDM	09.08 -	1000	850	E10-10-008-02-22	A, 18, 20			30	30					F11-10-008-02-VA	F11-10-008-01-HA	T
Pro-Tronic (Elektronische Performance Fahrwerksmodule | *Electronic Performance Suspension Moduls*)																
Alle Motorisierungen / *all motorisation*	09.08 -			AM65-10-008-01-22	A, 175											
B12 Pro-Kit (Performance Komplettfahrwerke | *Performance Springs+Shocks*)																
0.9, 1.3 JTDM, 1.4, 1.4 TB, 1.4 Turbo	09.08 -	955	850	E90-10-008-01-22	A, 18, 20, 21, 78, 161			30	30					F11-10-008-01-VA	F11-10-008-01-HA	T
1.6 JTDM	09.08 -	1000	850	E90-10-008-02-22	A, 18, 20, 21, 78, 161			30	30					F11-10-008-02-VA	F11-10-008-01-HA	T
Pro-Street-S (Gewindefahrwerke - höhenverstellbar | *Coil-Overs-Adjustable Ride Hight*)																
1.3 JTDM, 1.4, 1.4 TB, 1.4 Turbo, 1.6 JTDM	09.08 -	900	850	PSS65-10-008-01-22	A, 45, 160			20-50	30-55							T
1.3 JTDM, 1.4, 1.4 TB, 1.4 Turbo, 1.6 JTDM	09.08 -	1000	850	PSS65-10-008-02-22	A, 45, 160			20-50	30-55							T
SPIDER (916S_)																
Pro-Kit (Performance Fahrwerksfedern | *Performance Springs*)																
2.0 T.SPARK 16V, 3.0 V6, 3.0 V6 24V	06.95 - 10.00	1060	1000	E1018-140	A, 18, 20			20	20					F1018001	F1018102	T
1.8 16V, 2.0 JTS, 2.0 T.SPARK 16V, 2.0 V6 Turbo, 3.0 V6, 3.2 V6 24V	06.95 - 04.05	1060	1000	E1024-140	A, 18, 20			20	20					F1024001	F1018102	T
SPIDER (939)																
Pro-Kit (Performance Fahrwerksfedern | *Performance Springs*)																
2.4 JTDM, 3.2 JTS	04.07 -	1300	1100	E10-10-007-03-22	A, 18, 20			20	20					F11-10-005-02-VA	F11-10-006-01-HA	T
3.2 JTS Q4	09.06 -	1300	1100	E10-10-007-02-22	A, 18			20	20					F11-10-005-02-VA	F11-10-005-05-HA	T
B12 Pro-Kit (Performance Komplettfahrwerke | *Performance Springs+Shocks*)																
2.4 JTDM, 3.2 JTS	04.07 -	1300	1100	E90-10-007-03-22	A, 18, 20, 73, 78, 161			20	20					F11-10-005-02-VA	F11-10-006-01-HA	T
3.2 JTS Q4	09.06 -	1300	1100	E90-10-007-02-22	A, 18, 20, 49, 78, 161			20	20					F11-10-005-02-VA	F11-10-005-05-HA	T

AUDI

80 (8C, B4)																
Pro-Kit (Performance Fahrwerksfedern | *Performance Springs*)																
1.6, 1.6 E, 1.9 TD, 1.9 TDI, 2.0, 2.0 E, 2.0 E 16V, 2.3 E	09.91 - 12.94	1000	900	E1519-240	A, 12, 18, 20			30-35	30					F1518001	F1519002	T
2.6, 2.8	09.91 - 12.94	1050	900	E1519-140	A, 12, 18, 20			30-35	30					F1508001	F1519002	T
100 (4A, C4)																
Pro-Kit (Performance Fahrwerksfedern | *Performance Springs*)																
2.3 E, 2.4 D, 2.5 TDI, 2.6, 2.8 E	12.90 - 06.94	1160	1080	E1515-140	A, 15, 18, 20			35	30					F1515001	F1515002	T
2.3 E Automatik, 2.4 D Automatik, 2.5 TDI Automatik, 2.6 Automatik, 2.8 E Automatik *2.3 E automatic transmission, 2.4 D automatic transmission, 2.5 TDI automatic transmission, 2.6 automatic transmission, 2.8 E automatic transmission*	12.90 - 06.94	1160	1080	E1527-140	A, 18, 20			35	30					F1527001	F1515002	T
2.3 E quattro, 2.6 quattro, 2.8 E quattro, S4 Turbo quattro, S4 V8 quattro	12.90 - 06.94	1240	1200	E1516-140	A, 15, 18			35	30					F1515001	F1516002	T
2.3 E quattro Automatik, 2.6 quattro Automatik, 2.8 E quattro Automatik, S4 Turbo quattro Automatik, S4 V8 quattro Automatik *2.3 E quattro automatic transmission, 2.6 quattro automatic transmission, 2.8 E quattro automatic transmission, S4 Turbo quattro automatic transmission, S4 V8 quattro automatic transmission*	12.90 - 06.94	1240	1200	E1528-140	A, 18			35	30					F1527001	F1516002	T
2.3 E, 2.4 D, 2.5 TDI, 2.6, 2.8 E	12.90 - 06.94	1160	1080	E1517-140	A, 15, 18, 20			35	30					F1515001	F1517002	T

AUDI

AUDI

Modell *Model*	Baujahr *Year*	Achslast Vorne kg *Front Axle Load kg*	Achslast Hinten kg *Rear Axle Load kg*	Artikel-Nr. *Part-No.*	Hinweise *Notes*	ab Nachtrag ...xx BE *from suppl. ...xx of type approval*	bis Nachtrag ...xx BE *to suppl. ...xx of type approval*	ca. Tieferl. Vorne mm *ca. Lowering Front mm*	ca. Tieferl. Hinten mm *ca. Lowering Rear mm*	Ø Vorne mm *Ø Front mm*	Ø Hinten mm *Ø Rear mm*	Verstellbarkeit Vorne *Adjustable Front*	Verstellbarkeit Hinten *Adjustable Rear*	Ersatzteilbez. Vorne *Spare Part Marking Front*	Ersatzteilbez. Hinten *Spare Part Marking Rear*	Gutachten *Homologation*
100 Avant (4A, C4)																
Pro-Kit (Performance Fahrwerksfedern | *Performance Springs*)																
2.3 E Automatik, 2.4 D Automatik, 2.5 TDI Automatik, 2.6 Automatik, 2.8 E Automatik *2.3 E automatic transmission, 2.4 D automatic transmission, 2.5 TDI automatic transmission, 2.6 automatic transmission, 2.8 E automatic transmission*	12.90 - 06.94	1160	1080	E1529-140	A, 18, 20			35	30					F1527001	F1517002	T
2.3 E quattro, 2.6 E quattro, 2.6 quattro, 2.8 E quattro, S4 Turbo quattro, S4 V8 quattro	09.91 - 07.94	1240	1200	E1521-140	A, 15, 18			35	30					F1515001	F1521002	T
2.3 E quattro Automatik, 2.6 E quattro Automatik, 2.6 quattro Automatik, 2.8 E quattro Automatik, S4 Turbo quattro Automatik, S4 V8 quattro Automatik *2.3 E quattro automatic transmission, 2.6 E quattro automatic transmission, 2.6 quattro automatic transmission, 2.8 E quattro automatic transmission, S4 Turbo quattro automatic transmission, S4 V8 quattro automatic transmission*	09.91 - 07.94	1240	1200	E1530-140	A, 18			35	30					F1527001	F1521002	T
A1 (8X1)																
Pro-Kit (Performance Fahrwerksfedern | *Performance Springs*)																
1.0 TFSI, 1.2 TFSI, 1.4 TFSI	05.10 -	880	800	E10-15-014-01-22	A, 18, 20			20	20					F11-15-014-01-VA	F11-85-008-01-HA	T
1.4 TFSI, 1.4 TDI, 1.6 TDI	05.10 -	930	800	E10-15-014-02-22	A, 18, 20			20	20					F11-15-014-02-VA	F11-85-008-01-HA	T
1.4 TFSI, 1.8 TFSI, 1.4 TDI, 1.6 TDI, 2.0 TDI	01.11 -	960	800	E10-15-014-03-22	A, 18, 20			20	20					F11-81-010-05-VA	F11-85-008-01-HA	T
S1 quattro	03.14 -	960	870	E10-15-014-04-22	A, 18			20	15-20					F11-15-014-04-FA	F11-15-007-01-HA	T
Anti-Roll-Kit (Performance Stabilisatoren | *Performance Sway Bars*)																
1.0 TFSI, 1.2 TFSI, 1.4 TFSI, 1.8 TFSI, 1.4 TDI, 1.6 TDI, 2.0 TDI	05.10 -			E40-85-008-01-10	A, 18, 20, 22, 45					22		nicht verstellbar *not adjustable*		AS41-85-008-01-VA	AM40-85-008-01-10	T
B12 Pro-Kit (Performance Komplettfahrwerke | *Performance Springs+Shocks*)																
1.0 TFSI, 1.2 TFSI, 1.4 TFSI	05.10 -	880	800	E90-15-014-01-22	A, 18, 20, 78, 161			20	15					F11-15-014-01-VA	F11-85-008-01-HA	T
1.4 TFSI, 1.4 TDI, 1.6 TDI	05.10 -	930	800	E90-15-014-02-22	A, 18, 20, 78, 161			20	15					F11-15-014-02-VA	F11-85-008-01-HA	T
1.4 TFSI, 1.8 TFSI, 1.4 TDI, 1.6 TDI, 2.0 TDI	01.11 -	960	800	E90-15-014-03-22	A, 18, 20, 78, 161			20	15					F11-81-010-05-VA	F11-85-008-01-HA	T
Pro-Street-S (Gewindefahrwerke - höhenverstellbar | *Coil-Overs-Adjustable Ride Hight*)																
1.0 TFSI, 1.2 TFSI, 1.4 TFSI, 1.4 TDI, 1.6 TDI	05.10 -	900	790	PSS65-81-010-01-22	A, 24, 25, 45, 160			15-50	15-50							T
1.0 TFSI, 1.2 TFSI, 1.4 TFSI, 1.8 TFSI, 1.4 TDI, 1.6 TDI, 2.0 TDI	05.10 -	960	790	PSS65-81-010-02-22	A, 24, 25, 45, 160			15-50	15-50							T
A1 Sportback (8XA)																
Pro-Kit (Performance Fahrwerksfedern | *Performance Springs*)																
1.0 TFSI, 1.2 TFSI, 1.4 TFSI	11.11 -	880	800	E10-15-014-01-22	A, 18, 20			20	20					F11-15-014-01-VA	F11-85-008-01-HA	T
1.4 TFSI, 1.4 TDI, 1.6 TDI	11.11 -	930	800	E10-15-014-02-22	A, 18, 20			20	20					F11-15-014-02-VA	F11-85-008-01-HA	T
1.4 TFSI, 1.8 TFSI, 1.4 TDI, 1.6 TDI, 2.0 TDI	11.11 -	960	800	E10-15-014-03-22	A, 18, 20			20	20					F11-81-010-05-VA	F11-85-008-01-HA	T
S1 quattro	03.14 -	960	870	E10-15-014-04-22	A, 18			20	15-20					F11-15-014-04-FA	F11-15-007-01-HA	T
Anti-Roll-Kit (Performance Stabilisatoren | *Performance Sway Bars*)																
1.0 TFSI, 1.2 TFSI, 1.4 TFSI, 1.8 TFSI, 1.4 TDI, 1.6 TDI, 2.0 TDI	11.11 -			E40-85-008-01-10	A, 18, 20, 22, 45					22		nicht verstellbar *not adjustable*		AS41-85-008-01-VA	AM40-85-008-01-10	T
B12 Pro-Kit (Performance Komplettfahrwerke | *Performance Springs+Shocks*)																
1.0 TFSI, 1.2 TFSI, 1.4 TFSI	11.11 -	880	800	E90-15-014-01-22	A, 18, 20, 78, 161			20	15					F11-15-014-01-VA	F11-85-008-01-HA	T
1.4 TFSI, 1.4 TDI, 1.6 TDI	11.11 -	930	800	E90-15-014-02-22	A, 18, 20, 78, 161			20	20					F11-15-014-02-VA	F11-85-008-01-HA	T
1.4 TFSI, 1.8 TFSI, 1.4 TDI, 1.6 TDI, 2.0 TDI	11.11 -	960	800	E90-15-014-03-22	A, 18, 20, 78, 161			20	20					F11-81-010-05-VA	F11-85-008-01-HA	T
Pro-Street-S (Gewindefahrwerke - höhenverstellbar | *Coil-Overs-Adjustable Ride Hight*)																
1.0 TFSI, 1.2 TFSI, 1.4 TFSI, 1.4 TDI, 1.6 TDI	11.11 -	900	790	PSS65-81-010-01-22	A, 24, 25, 45, 160			15-50	15-50							T
1.0 TFSI, 1.2 TFSI, 1.4 TFSI, 1.8 TFSI, 1.4 TDI, 1.6 TDI, 2.0 TDI	11.11 -	960	790	PSS65-81-010-02-22	A, 24, 25, 45, 160			15-50	15-50							T
A3 (8L1)																
Pro-Kit (Performance Fahrwerksfedern | *Performance Springs*)																
1.6, 1.8, 1.8 T	09.96 - 05.03	990	930	E1540-140	A, 18, 20, 26			30	25					F1540001	F1540002	T
1.9 TDI	09.96 - 05.03	990	930	E1545-140	A, 18, 20, 26			30	25					F1545001	F1540002	T
1.8 T, 1.9 TDI	09.96 - 05.03	1020	930	E10-15-004-01-22	A, 18, 20, 26			30	25					F8592001	F1540002	T
1.8 T quattro, 1.9 TDI quattro	12.96 - 05.03	1050	1120	E10-15-004-02-22	A, 18			30	25					F8592001	F11-15-001-02-HA	T
S3 quattro	03.99 - 05.03	1050	1120	E10-15-004-03-22	A, 18			25	20					F8547001	F11-15-001-02-HA	T
Sportline (Performance Fahrwerksfedern Sport | *Sport Performance Springs*)																
1.6, 1.8, 1.8 T, 1.9 TDI	09.96 - 05.03	950	1000	E20-15-004-01-22	A, 18, 20, 26			45-50	35-40					F21-85-001-01-VA	F21-85-001-01-HA	T
1.8, 1.8 T, 1.9 TDI	09.96 - 05.03	1000	1000	E20-15-004-02-22	A, 18, 20, 26			45-50	35-40					F21-85-003-01-VA	F21-85-001-01-HA	T
Anti-Roll-Kit (Performance Stabilisatoren | *Performance Sway Bars*)																
1.6, 1.8, 1.8 T	09.96 - 05.03			E1540-321	A, 18, 20, 22, 45					22		nicht verstellbar *not adjustable*		AS1540310VA		T
1.6, 1.8, 1.8 T	09.96 - 05.03			E1540-320	A, 18, 20, 22, 45					22	25	nicht verstellbar *not adjustable*	nicht verstellbar *not adjustable*	AS1540310VA	AS1540320HA	T
1.9 TDI	09.96 - 05.03			E40-85-005-01-10	A, 18, 20, 22, 45					25		nicht verstellbar *not adjustable*		AS41-85-005-01-VA		T
1.9 TDI	09.96 - 05.03			E40-85-005-01-11	A, 18, 20, 22, 45					25	25	nicht verstellbar *not adjustable*	nicht verstellbar *not adjustable*	AS41-85-005-01-VA	AS1540320HA	T
B12 Pro-Kit (Performance Komplettfahrwerke | *Performance Springs+Shocks*)																
1.6 Schaltgetriebe, 1.8 Schaltgetriebe, 1.8 T Schaltgetriebe *1.6 manual transmission, 1.8 T manual transmission, 1.8 manual transmission*	09.96 - 05.03	990	930	E90-15-004-01-22	A, 18, 20, 26, 78, 161			30	25					F1540001	F1540002	T
1.9 TDI Schaltgetriebe *1.9 TDI manual transmission*	09.96 - 05.03	990	930	E90-15-004-02-22	A, 18, 20, 26, 78, 161			30	25					F1545001	F1540002	T
1.8 T, 1.9 TDI	09.96 - 05.03	1020	930	E90-15-004-03-22	A, 18, 20, 26, 78, 161			30	30					F8592001	F1540002	T

Modell	Baujahr	Achslast Vorne kg	Achslast Hinten kg	Artikel-Nr.	Hinweise	ab Nachtrag ...xx BE	bis Nachtrag ...xx BE	ca. Tieferl. Vorne mm	ca. Tieferl. Hinten mm	Ø Vorne mm	Ø Hinten mm	Verstellbarkeit Vorne	Verstellbarkeit Hinten	Ersatzteilbez. Vorne	Ersatzteilbez. Hinten	Gutachten
Model	*Year*	*Front Axle Load kg*	*Rear Axle Load kg*	*Part-No.*	*Notes*	*from suppl. ...xx of type approval*	*to suppl. ...xx of type approval*	*ca. Lowering Front mm*	*ca. Lowering Rear mm*	*Ø Front mm*	*Ø Rear mm*	*Adjustable Front*	*Adjustable Rear*	*Spare Part Marking Front*	*Spare Part Marking Rear*	*Homologation*
A3 (8L1)																
B12 Pro-Kit (Performance Komplettfahrwerke | *Performance Springs+Shocks*)																
1.8 T quattro, 1.9 TDI quattro	12.96 - 05.03	1050	1120	E90-15-004-04-22	A, 18, 26, 78, 161			30	25					F8592001	F11-15-001-02-HA	T
S3 quattro	03.99 - 05.03	1050	1120	E90-15-004-05-22	A, 18, 26, 78, 161			25	20					F8547001	F11-15-001-02-HA	T
B12 Sportline (Performance Komplettfahrwerke Sport | *Sport Performance Springs+Shocks*)																
1.6, 1.8, 1.8 T, 1.9 TDI	09.96 - 05.03	950	1000	E95-15-004-01-22	A, 18, 20, 26, 78, 161			45-50	35-40					F21-85-001-01-VA	F21-85-001-01-HA	T
1.8, 1.8 T, 1.9 TDI	09.96 - 05.03	1000	1000	E95-15-004-02-22	A, 18, 20, 26, 78, 161			45-50	35-40					F21-85-003-01-VA	F21-85-001-01-HA	T
Pro-Street-S (Gewindefahrwerke - höhenverstellbar | *Coil-Overs-Adjustable Ride Hight*)																
1.6, 1.8, 1.8 T, 1.9 TDI	09.96 - 05.03	1030	1025	PSS65-85-001-01-22	A, 20, 24, 25, 26, 45, 160			30-70	30-70							T
1.8 T quattro, 1.9 TDI quattro	10.98 - 05.03	1040	1030	PSS65-85-001-02-22	A, 24, 25, 45, 160			25-50	25-50							T
S3 quattro	03.99 - 05.03	1040	1050	PSS65-85-001-02-22	A, 24, 25, 45, 160			25-50	25-50							T
A3 (8P1)																
Pro-Kit (Performance Fahrwerksfedern | *Performance Springs*)																
1.2 TSI, 1.4 TFSI, 1.6, 1.6 FSI, 1.9 TDI, 2.0, 2.0 FSI	05.03 - 08.12	980	1005	E10-15-007-01-22	A, 18, 20			30	30					F11-15-007-01-VA	F11-15-007-01-HA	ABE
1.2 TSI, 1.4 TFSI, 1.6, 1.6 FSI, 1.6 TDI, 1.8 T, 1.8 TFSI, 1.9 TDI, 2.0, 2.0 FSI, 2.0 TFSI	05.03 - 08.12	1065	1005	E10-15-007-02-22	A, 18, 20			30	30					F11-15-007-02-VA	F11-15-007-01-HA	ABE
S3 quattro	11.06 - 08.12	1155		E10-15-007-14-20	A, 18			20						F11-15-007-14-VA		T
1.6 TDI, 1.8 T, 1.8 TFSI, 2.0 TDI, 2.0 TDI 16V, 2.0 TFSI	05.03 - 08.12	1155	1005	E10-15-007-03-22	A, 18, 20			30	30					F11-15-007-03-VA	F11-15-007-01-HA	ABE
1.8 TFSI quattro, 2.0 TDI 16V quattro, 2.0 TDI quattro, 2.0 TFSI quattro	05.03 - 08.12	1155	1125	E10-15-007-09-22	A, 18			30	30					F11-15-007-03-VA	F11-15-007-04-HA	ABE
3.2 V6 quattro	07.03 - 05.09	1155	1125	E10-15-007-04-22	A, 18			30	30					F11-15-007-04-VA	F11-15-007-04-HA	ABE
Sportline (Performance Fahrwerksfedern Sport | *Sport Performance Springs*)																
1.2 TSI, 1.4 TFSI, 1.6, 1.6 FSI, 1.6 TDI, 1.8 T, 1.8 TFSI, 1.9 TDI, 2.0, 2.0 FSI	05.03 - 08.12	1040	1010	E20-15-007-01-22	A, 18, 20			45-50	35-40					F21-15-007-01-VA	F21-15-007-01-HA	ABE
1.6 TDI, 1.8 T, 1.8 TFSI, 2.0 TDI, 2.0 TDI 16V, 2.0 TFSI	05.03 - 08.12	1130	1010	E20-15-007-02-22	A, 18, 20			45-50	35-40					F21-15-007-02-VA	F21-15-007-01-HA	ABE
Anti-Roll-Kit (Performance Stabilisatoren | *Performance Sway Bars*)																
1.2 TSI, 1.4 TFSI, 1.6, 1.6 FSI, 1.6 TDI, 1.8 T, 1.8 TFSI, 1.9 TDI, 2.0, 2.0 FSI, 2.0 TDI, 2.0 TDI 16V, 2.0 TFSI	05.03 - 08.12			E40-15-007-01-11	A, 18, 20, 22, 45					26	23	2-fach verstellbar *2-way adjustable*	2-fach verstellbar *2-way adjustable*	AS41-85-014-01-VA	AS41-85-014-01-HA	T
Pro-Tronic (Elektronische Performance Fahrwerksmodule | *Electronic Performance Suspension Moduls*)																
Alle Motorisierungen / *all motorisation*	05.03 -			AM65-15-007-01-22	A, 175											
B12 Pro-Kit (Performance Komplettfahrwerke | *Performance Springs+Shocks*)																
1.6 FSI Schaltgetriebe, 1.6 Schaltgetriebe *1.6 FSI manual transmission, 1.6 manual transmission*	05.03 - 08.12	980	1005	E90-15-007-02-22	A, 18, 20, 21, 34, 78, 101, 124, 161			30	30					F11-15-007-01-VA	F11-15-007-01-HA	ABE
1.6 FSI Schaltgetriebe, 1.6 Schaltgetriebe *1.6 FSI manual transmission, 1.6 manual transmission*	05.03 - 08.12	980	1005	E90-15-007-01-22	A, 18, 20, 21, 35, 78, 101, 122, 161			30	30					F11-15-007-01-VA	F11-15-007-01-HA	ABE
1.2 TSI, 1.4 TFSI, 1.6, 1.6 FSI, 1.6 TDI, 1.8 T, 1.8 TFSI, 1.9 TDI, 2.0, 2.0 FSI, 2.0 TFSI	05.03 - 08.12	1065	1005	E90-15-007-04-22	A, 18, 20, 21, 34, 78, 101, 124, 161			30	30					F11-15-007-02-VA	F11-15-007-01-HA	ABE
1.2 TSI, 1.4 TFSI, 1.6, 1.6 FSI, 1.6 TDI, 1.8 T, 1.8 TFSI, 1.9 TDI, 2.0, 2.0 FSI, 2.0 TFSI	05.03 - 08.12	1065	1005	E90-15-007-03-22	A, 18, 20, 21, 35, 78, 101, 122, 161			30	30					F11-15-007-02-VA	F11-15-007-01-HA	ABE
1.6 TDI, 1.8 T, 1.8 TFSI, 1.9 TDI, 2.0, 2.0 FSI, 2.0 TDI, 2.0 TFSI	05.03 - 08.12	1155	1005	E90-15-007-06-22	A, 18, 20, 21, 34, 78, 101, 124, 161			30	30					F11-15-007-03-VA	F11-15-007-01-HA	ABE
1.6 TDI, 1.8 T, 1.8 TFSI, 1.9 TDI, 2.0, 2.0 FSI, 2.0 TDI, 2.0 TFSI	05.03 - 08.12	1155	1005	E90-15-007-05-22	A, 18, 20, 21, 35, 78, 101, 122, 161			30	30					F11-15-007-03-VA	F11-15-007-01-HA	ABE
1.8 TFSI quattro, 2.0 TDI 16V quattro, 2.0 TDI quattro, 2.0 TFSI quattro	05.03 - 08.12	1155	1125	E90-15-007-09-22	A, 18, 21, 34, 78, 101, 124, 161			30	30					F11-15-007-03-VA	F11-15-007-04-HA	ABE
1.8 TFSI quattro, 2.0 TDI 16V quattro, 2.0 TDI quattro, 2.0 TFSI quattro	05.03 - 08.12	1155	1125	E90-15-007-08-22	A, 18, 21, 35, 78, 101, 122, 161			30	30					F11-15-007-03-VA	F11-15-007-04-HA	ABE
3.2 V6 quattro	07.03 - 05.09	1155	1125	E90-15-007-07-22	A, 18, 21, 34, 78, 101, 124, 161			30	30					F11-15-007-04-VA	F11-15-007-04-HA	ABE
B12 Sportline (Performance Komplettfahrwerke Sport | *Sport Performance Springs+Shocks*)																
1.2 TSI, 1.4 TFSI, 1.6, 1.6 FSI, 1.9 TDI, 2.0, 2.0 FSI	05.03 - 08.12	1040	1010	E95-15-007-02-22	A, 18, 20, 21, 34, 78, 101, 124, 161			45-50	35-40					F21-15-007-01-VA	F21-15-007-01-HA	ABE
1.2 TSI, 1.4 TFSI, 1.6, 1.6 FSI, 1.6 TDI, 1.9 TDI, 2.0, 2.0 FSI	05.03 - 08.12	1040	1010	E95-15-007-01-22	A, 18, 20, 21, 35, 78, 101, 122, 161			45-50	35-40					F21-15-007-01-VA	F21-15-007-01-HA	ABE
1.8 T, 1.8 TFSI, 1.9 TDI, 2.0, 2.0 FSI, 2.0 TDI, 2.0 TDI 16V, 2.0 TFSI	05.03 - 08.12	1130	1010	E95-15-007-04-22	A, 18, 20, 21, 34, 78, 101, 124, 161			45-50	35-40					F21-15-007-02-VA	F21-15-007-01-HA	ABE
1.6 TDI, 1.8 T, 1.8 TFSI, 1.9 TDI, 2.0, 2.0 FSI, 2.0 TDI, 2.0 TDI 16V, 2.0 TFSI	05.03 - 08.12	1130	1010	E95-15-007-03-22	A, 18, 20, 21, 35, 78, 101, 122, 161			45-50	35-40					F21-15-007-02-VA	F21-15-007-01-HA	ABE
Pro-Street-S (Gewindefahrwerke - höhenverstellbar | *Coil-Overs-Adjustable Ride Hight*)																
1.2 TSI, 1.4 TFSI, 1.6, 1.6 FSI, 1.6 TDI, 1.8 T, 1.8 TFSI, 1.9 TDI, 2.0, 2.0 FSI, 2.0 TDI, 2.0 TDI 16V, 2.0 TFSI	05.03 - 08.12	1035	1150	PSS65-85-014-01-22	A, 20, 24, 34, 45, 101, 160			35-65	35-65							T
1.2 TSI, 1.4 TFSI, 1.6, 1.6 FSI, 1.6 TDI, 1.8 T, 1.8 TFSI, 1.9 TDI, 2.0, 2.0 FSI, 2.0 TDI, 2.0 TDI 16V, 2.0 TFSI	05.03 - 08.12	1035	1150	PSS65-85-014-02-22	A, 20, 24, 35, 45, 101, 160			35-65	35-65							T
1.2 TSI, 1.4 TFSI, 1.6, 1.6 FSI, 1.6 TDI, 1.8 T, 1.8 TFSI, 1.9 TDI, 2.0, 2.0 FSI, 2.0 TDI, 2.0 TDI 16V, 2.0 TFSI	05.03 - 08.12	1105	1150	PSS65-85-014-03-22	A, 20, 24, 34, 45, 101, 160			35-65	35-65							T
1.2 TSI, 1.4 TFSI, 1.6, 1.6 FSI, 1.6 TDI, 1.8 T, 1.8 TFSI, 1.9 TDI, 2.0, 2.0 FSI, 2.0 TDI, 2.0 TDI 16V, 2.0 TFSI	05.03 - 08.12	1105	1150	PSS65-85-014-04-22	A, 20, 24, 35, 45, 101, 160			35-65	35-65							T

AUDI

AUDI

Modell *Model*	Baujahr *Year*	Achslast Vorne kg *Front Axle Load kg*	Achslast Hinten kg *Rear Axle Load kg*	Artikel-Nr. *Part-No.*	Hinweise *Notes*	ab Nachtrag ...xx BE *from suppl. ...xx of type approval*	bis Nachtrag ...xx BE *to suppl. ...xx of type approval*	ca. Tieferl. Vorne mm *ca. Lowering Front mm*	ca. Tieferl. Hinten mm *ca. Lowering Rear mm*	Ø Vorne mm *Ø Front mm*	Ø Hinten mm *Ø Rear mm*	Verstellbarkeit Vorne *Adjustable Front*	Verstellbarkeit Hinten *Adjustable Rear*	Ersatzteilbez. Vorne *Spare Part Marking Front*	Ersatzteilbez. Hinten *Spare Part Marking Rear*	Gutachten *Homologation*
A3 (8P1)																
Pro-Street-S (Gewindefahrwerke - höhenverstellbar | *Coil-Overs-Adjustable Ride Hight*)																
1.8 TFSI quattro, 2.0 TFSI quattro	09.04 - 08.12	1105	1160	PSS65-15-007-01-22	A, 24, 34, 45, 101, 160			35-65	35-65							T
1.2 TSI, 1.4 TFSI, 1.6, 1.6 FSI, 1.6 TDI, 1.8 T, 1.8 TFSI, 1.9 TDI, 2.0, 2.0 FSI, 2.0 TDI, 2.0 TDI 16V, 2.0 TFSI	05.03 - 08.12	1170	1150	PSS65-85-014-05-22	A, 20, 24, 34, 45, 101, 160			35-65	35-65							T
1.2 TSI, 1.4 TFSI, 1.6, 1.6 FSI, 1.6 TDI, 1.8 T, 1.8 TFSI, 1.9 TDI, 2.0, 2.0 FSI, 2.0 TDI, 2.0 TDI 16V, 2.0 TFSI	05.03 - 08.12	1170	1150	PSS65-85-014-06-22	A, 20, 24, 35, 45, 101, 160			35-65	35-65							T
2.0 TDI quattro, 2.0 TDI 16V quattro, 3.2 V6 quattro, S3 quattro	05.03 - 08.12	1170	1160	PSS65-15-007-02-22	A, 24, 34, 45, 101, 160			35-65	35-65							T
A3 (8V1)																
Pro-Kit (Performance Fahrwerksfedern | *Performance Springs*)																
1.2 TFSI, 1.4 TFSI, 1.6 TDI, 1.8 TFSI	04.12 -	985	1000	E10-15-021-01-22	A, 18, 20, 170			30	30					F11-15-021-01-VA	F11-15-021-01-HA	ABE
1.6 TDI, 1.8 TFSI, 2.0 TDI	04.12 -	1070	1000	E10-15-021-02-22	A, 18, 20, 170			30	30					F11-15-021-02-VA	F11-15-021-01-HA	ABE
1.2 TFSI, 1.4 TFSI, 1.6 TDI, 1.8 TFSI	04.12 -	985	990	E10-15-021-03-22	A, 18, 20, 171			30	30					F11-15-021-01-VA	F1540002	ABE
1.6 TDI, 1.8 TFSI, 2.0 TDI	04.12 -	1070	990	E10-15-021-04-22	A, 18, 20, 171			30	30					F11-15-021-02-VA	F1540002	ABE
1.8 TFSI quattro, 2.0 TDI quattro	04.12 -	1070	1075	E10-15-021-10-22	A, 18, 170			30	30					F11-15-021-02-VA	F11-15-007-15-HA	ABE
2.0 TDI quattro	10.12 -	1090	1035	E10-15-021-12-22	A, 18			20	10					F11-15-021-12-VA	F11-15-021-12-HA	ABE
S3 quattro	10.12 -	1090	1035	E10-15-021-12-22	A, 18			10	10					F11-15-021-12-VA	F11-15-021-12-HA	ABE
Sportline (Performance Fahrwerksfedern Sport | *Sport Performance Springs*)																
1.2 TFSI, 1.4 TFSI, 1.8 TFSI, 1.6 TDI	04.12 -	970	1070	E20-15-021-01-22	A, 18, 20, 170			45	35-40					F21-15-021-01-VA	F21-15-021-01-HA	ABE
1.8 TFSI, 1.6 TDI, 2.0 TDI	04.12 -	1070	1070	E20-15-021-02-22	A, 18, 20, 170			45	35-40					F21-15-021-02-VA	F21-15-021-01-HA	ABE
1.2 TFSI, 1.4 TFSI, 1.8 TFSI, 1.6 TDI	04.12 -	970	1010	E20-15-021-03-22	A, 18, 20, 171			45	35-40					F21-15-021-01-VA	F21-15-021-03-HA	ABE
1.8 TFSI, 1.6 TDI, 2.0 TDI	04.12 -	1070	1010	E20-15-021-04-22	A, 18, 20, 171			45	35-40					F21-15-021-02-VA	F21-15-021-03-HA	ABE
1.8 TFSI quattro, 2.0 TDI quattro	04.12 -	1070	1075	E20-15-021-05-22	A, 18, 170			45	35-40					F21-15-021-02-VA	F21-15-021-05-HA	ABE
2.0 TDI quattro, S3 quattro	10.12 -	1100	1080	E20-15-021-06-22	A, 18			20-25	15-20					F21-15-021-06-VA	F21-15-021-06-HA	ABE
Anti-Roll-Kit (Performance Stabilisatoren | *Performance Sway Bars*)																
1.2 TFSI, 1.4 TFSI, 1.6 TDI, 1.8 TFSI, 2.0 TDI	04.12 -			E40-15-021-01-11	A, 18, 20, 22, 45, 170					28 Rohr 28 *tube*	25 Rohr 25 *tube*	2-fach verstellbar *2-way adjustable*	nicht verstellbar *not adjustable*	AS41-15-021-01-VA	AS41-15-021-01-HA	T
1.8 TFSI quattro, 2.0 TDI quattro, S3 quattro	04.12 -			E40-15-021-02-11	A, 18, 22, 45, 170					28 Rohr 28 *tube*	25 Rohr 25 *tube*	2-fach verstellbar *2-way adjustable*	2-fach verstellbar *2-way adjustable*	AS41-15-021-02-VA	AS41-15-021-02-HA	T
1.2 TFSI, 1.4 TFSI, 1.6 TDI, 1.8 TFSI, 2.0 TDI	04.12 -			E40-15-021-03-11	A, 18, 20, 22, 45, 171					28 Rohr 28 *tube*	25	2-fach verstellbar *2-way adjustable*	nicht verstellbar *not adjustable*	AS41-15-021-01-VA	AS41-15-021-03-HA	T
Pro-Tronic (Elektronische Performance Fahrwerksmodule | *Electronic Performance Suspension Moduls*)																
Alle Motorisierungen / *all motorisation*	04.12 -			AM65-15-021-02-22	A, 175											
B12 Pro-Kit (Performance Komplettfahrwerke | *Performance Springs+Shocks*)																
1.2 TFSI, 1.4 TFSI, 1.6 TDI, 1.8 TFSI	04.12 -	985	1000	E90-15-021-01-22	A, 18, 20, 35, 78, 161, 170, 188			30	30					F11-15-021-01-VA	F11-15-021-01-HA	ABE
1.6 TDI, 1.8 TFSI, 2.0 TDI	04.12 -	1070	1000	E90-15-021-02-22	A, 18, 20, 35, 78, 161, 170, 188			30	30					F11-15-021-02-VA	F11-15-021-01-HA	ABE
1.2 TFSI, 1.4 TFSI, 1.6 TDI, 1.8 TFSI	04.12 -	985	990	E90-15-021-03-22	A, 18, 20, 35, 78, 161, 171, 189			30	30					F11-15-021-01-VA	F1540002	ABE
1.6 TDI, 1.8 TFSI, 2.0 TDI	04.12 -	1070	990	E90-15-021-04-22	A, 18, 20, 35, 78, 161, 171, 189			30	30					F11-15-021-02-VA	F1540002	ABE
1.8 TFSI quattro, 2.0 TDI quattro	08.12 -	1070	1075	E90-15-021-10-22	A, 18, 35, 78, 161, 170, 188			30	30					F11-15-021-02-VA	F11-15-007-15-HA	ABE
2.0 TDI quattro	10.12 -	1090	1035	E90-15-021-12-22	A, 18, 34, 78, 161, 170, 190			20	10					F11-15-021-12-VA	F11-15-021-12-HA	ABE
S3 quattro	10.12 -	1090	1035	E90-15-021-12-22	A, 18, 34, 78, 161, 170, 190			10	10					F11-15-021-12-VA	F11-15-021-12-HA	ABE
1.2 TFSI, 1.4 TFSI, 1.6 TDI, 1.8 TFSI	04.12 -	985	1000	E90-15-021-15-22	A, 18, 20, 34, 78, 161, 170, 190			30	30					F11-15-021-01-VA	F11-15-021-01-HA	ABE
1.6 TDI, 1.8 TFSI, 2.0 TDI	04.12 -	1070	1000	E90-15-021-16-22	A, 18, 20, 34, 78, 161, 170, 190			30	30					F11-15-021-02-VA	F11-15-021-01-HA	ABE
1.2 TFSI, 1.4 TFSI, 1.6 TDI, 1.8 TFSI	04.12 -	985	990	E90-15-021-17-22	A, 18, 20, 34, 78, 161, 171, 191			30	30					F11-15-021-01-VA	F1540002	ABE
1.6 TDI, 1.8 TFSI, 2.0 TDI	04.12 -	1070	990	E90-15-021-18-22	A, 18, 20, 34, 78, 161, 171, 191			30	30					F11-15-021-02-VA	F1540002	ABE
1.8 TFSI quattro, 2.0 TDI quattro	08.12 -	1070	1075	E90-15-021-19-22	A, 18, 34, 78, 161, 170, 190			30	30					F11-15-021-02-VA	F11-15-007-15-HA	ABE
B12 Sportline (Performance Komplettfahrwerke Sport | *Sport Performance Springs+Shocks*)																
1.2 TFSI, 1.4 TFSI, 1.6 TDI, 1.8 TFSI	04.12 -	970	1070	E95-15-021-01-22	A, 18, 20, 35, 78, 161, 170, 188			45	35-40					F21-15-021-01-VA	F21-15-021-01-HA	ABE
1.6 TDI, 1.8 TFSI, 2.0 TDI	04.12 -	1070	1010	E95-15-021-02-22	A, 18, 20, 35, 78, 161, 170, 188			45	35-40					F11-15-021-02-VA	F11-15-021-01-HA	ABE
1.2 TFSI, 1.4 TFSI, 1.6 TDI, 1.8 TFSI	04.12 -	970	1010	E95-15-021-03-22	A, 18, 20, 35, 78, 161, 171, 189			45	35-40					F21-15-021-01-VA	F21-15-021-03-HA	ABE
1.6 TDI, 1.8 TFSI, 2.0 TDI	04.12 -	1070	1010	E95-15-021-04-22	A, 18, 20, 35, 78, 161, 171, 189			45	35-40					F21-15-021-02-VA	F21-15-021-03-HA	ABE

AUDI

Modell *Model*	Baujahr *Year*	Achslast Vorne kg *Front Axle Load kg*	Achslast Hinten kg *Rear Axle Load kg*	Artikel-Nr. *Part-No.*	Hinweise *Notes*	ab Nachtrag ...xx BE *from suppl. ...xx of type approval*	bis Nachtrag ...xx BE *to suppl. ...xx of type approval*	ca. Tieferl. Vorne mm *ca. Lowering Front mm*	ca. Tieferl. Hinten mm *ca. Lowering Rear mm*	Ø Vorne mm *Ø Front mm*	Ø Hinten mm *Ø Rear mm*	Verstellbarkeit Vorne *Adjustable Front*	Verstellbarkeit Hinten *Adjustable Rear*	Ersatzteilbez. Vorne *Spare Part Marking Front*	Ersatzteilbez. Hinten *Spare Part Marking Rear*	Gutachten *Homologation*
A3 (8V1)																
B12 Sportline (Performance Komplettfahrwerke Sport | *Sport Performance Springs+Shocks*)																
1.8 TFSI quattro, 2.0 TDI quattro	08.12 -	1070	1075	E95-15-021-10-22	A, 18, 35, 78, 161, 170, 188			45	35-40					F21-15-021-02-VA	F21-15-021-05-HA	ABE
2.0 TDI quattro	10.12 -	1100	1080	E95-15-021-12-22	A, 18, 34, 78, 161, 170, 190			20-25	15-20					F21-15-021-06-VA	F21-15-021-06-HA	ABE
1.2 TFSI, 1.4 TFSI, 1.6 TDI, 1.8 TFSI	04.12 -	970	1070	E95-15-021-15-22	A, 18, 20, 34, 78, 161, 170, 190			45	35-40					F21-15-021-01-VA	F21-15-021-01-HA	ABE
1.6 TDI, 1.8 TFSI, 2.0 TDI	04.12 -	1070	1070	E95-15-021-16-22	A, 18, 20, 34, 78, 161, 170, 190			45	35-40					F21-15-021-02-VA	F21-15-021-01-HA	ABE
1.2 TFSI, 1.4 TFSI, 1.6 TDI, 1.8 TFSI	04.12 -	970	1010	E95-15-021-17-22	A, 18, 20, 34, 78, 161, 171, 191			45	35-40					F21-15-021-01-VA	F21-15-021-03-HA	ABE
1.6 TDI, 1.8 TFSI, 2.0 TDI	04.12 -	1070	1010	E95-15-021-18-22	A, 18, 20, 34, 78, 161, 171, 191			45	35-40					F21-15-021-02-VA	F21-15-021-03-HA	ABE
1.8 TFSI quattro, 2.0 TDI quattro	04.12 -	1070	1075	E95-15-021-19-22	A, 18, 34, 78, 161, 170, 190			45	35-40					F21-15-021-02-VA	F21-15-021-05-HA	ABE
Pro-Street-S (Gewindefahrwerke - höhenverstellbar | *Coil-Overs-Adjustable Ride Hight*)																
1.2 TFSI, 1.4 TFSI, 1.6 TDI, 1.8 TFSI, 2.0 TDI	04.12 -	980	975	PSS65-15-021-01-22	A, 20, 24, 25, 35, 45, 160, 170			30-60	30-55							T
1.2 TFSI, 1.4 TFSI, 1.6 TDI, 1.8 TFSI, 2.0 TDI	04.12 -	1055	975	PSS65-15-021-02-22	A, 20, 24, 25, 35, 45, 160, 170			30-60	30-55							T
1.2 TFSI, 1.4 TFSI, 1.6 TDI, 1.8 TFSI, 2.0 TDI	04.12 -	980	975	PSS65-15-021-03-22	A, 20, 24, 25, 34, 45, 160, 171			30-60	30-55							T
1.2 TFSI, 1.4 TFSI, 1.6 TDI, 1.8 TFSI, 2.0 TDI	04.12 -	1055	975	PSS65-15-021-04-22	A, 20, 24, 25, 34, 45, 160, 171			30-60	30-55							T
1.8 TFSI quattro, 2.0 TFSI quattro	04.12 -	1090	1025	PSS65-15-021-05-22	A, 24, 25, 34, 45, 160, 170			30-60	30-55							T
S3 quattro	04.12 -	1090	1025	PSS65-15-021-05-22	A, 24, 25, 34, 45, 160, 170			0-30	5-30							T
1.2 TFSI, 1.4 TFSI, 1.8 TFSI, 1.6 TDI, 2.0 TDI	04.12 -	980	980	PSS65-15-021-07-22	A, 24, 25, 35, 45, 160, 170			35-65	35-65							T
1.2 TFSI, 1.4 TFSI, 1.8 TFSI, 1.6 TDI, 2.0 TDI	04.12 -	1060	980	PSS65-15-021-08-22	A, 24, 25, 35, 45, 160, 170			35-65	35-65							T
A3 Cabriolet (8P7) ***A3 Convertible (8P7)***																
Pro-Kit (Performance Fahrwerksfedern | *Performance Springs*)																
1.6 TDI, 1.8 TFSI, 1.9 TDI, 2.0 TDI, 2.0 TFSI	04.08 -	1155	985	E10-15-007-15-22	A, 18, 20			25	25					F11-15-007-03-VA	F11-15-007-15-HA	ABE
Pro-Tronic (Elektronische Performance Fahrwerksmodule | *Electronic Performance Suspension Moduls*)																
Alle Motorisierungen / *all motorisation*	04.08 -			AM65-15-007-01-22	A, 175											
B12 Pro-Kit (Performance Komplettfahrwerke | *Performance Springs+Shocks*)																
1.6 TDI, 1.8 TFSI, 1.9 TDI, 2.0 TDI, 2.0 TFSI	04.08 -	1155	985	E90-15-007-15-22	A, 18, 20, 34, 78, 124, 161			25	25					F11-15-007-03-VA	F11-15-007-15-HA	ABE
Pro-Street-S (Gewindefahrwerke - höhenverstellbar | *Coil-Overs-Adjustable Ride Hight*)																
1.8 TFSI, 1.9 TDI, 2.0 TFSI	04.08 -	1105	1160	PSS65-15-007-01-22	A, 24, 45, 160			35-65	35-65							T
2.0 TDI	04.08 -	1170	1160	PSS65-15-007-02-22	A, 24, 45, 160			35-65	35-65							T
A3 Cabriolet (8V7) ***A3 Convertible (8V7)***																
Pro-Kit (Performance Fahrwerksfedern | *Performance Springs*)																
1.4 TFSI, 1.6 TDI	10.13 -	985	1075	E10-15-021-14-22	A, 18, 170			25	20					F11-15-021-01-VA	F11-15-007-15-HA	ABE
1.8 TFSI, 1.6 TDI, 2.0 TDI	10.13 -	1070	1075	E10-15-021-10-22	A, 18, 170			25	20					F11-15-021-02-VA	F11-15-007-15-HA	ABE
S3 quattro	10.13 -	1090	1060	E10-15-021-13-22	A, 18, 170			15	10					F11-15-021-12-VA	F11-15-021-13-HA	ABE
Anti-Roll-Kit (Performance Stabilisatoren | *Performance Sway Bars*)																
1.4 TFSI, 1.8 TFSI, 1.6 TDI, 2.0 TDI	10.13 -			E40-15-021-01-11	A, 18, 20, 22, 45, 170					28 Rohr 28 *tube*	25 Rohr 25 *tube*	2-fach verstellbar *2-way adjustable*	nicht verstellbar *not adjustable*	AS41-15-021-01-VA	AS41-15-021-01-HA	T
1.8 TFSI quattro, 2.0 TDI quattro, S3 quattro	10.13 -			E40-15-021-02-11	A, 18, 22, 45, 170					28 Rohr 28 *tube*	25 Rohr 25 *tube*	2-fach verstellbar *2-way adjustable*	2-fach verstellbar *2-way adjustable*	AS41-15-021-02-VA	AS41-15-021-02-HA	T
1.4 TFSI, 1.8 TFSI, 1.6 TDI, 2.0 TDI	10.13 -			E40-15-021-03-11	A, 18, 20, 22, 45, 171					28 Rohr 28 *tube*	25	2-fach verstellbar *2-way adjustable*	nicht verstellbar *not adjustable*	AS41-15-021-01-VA	AS41-15-021-03-HA	T
Pro-Tronic (Elektronische Performance Fahrwerksmodule | *Electronic Performance Suspension Moduls*)																
Alle Motorisierungen / *all motorisation*	10.13 -			AM65-15-021-02-22	A, 175											
B12 Pro-Kit (Performance Komplettfahrwerke | *Performance Springs+Shocks*)																
1.4 TFSI, 1.6 TDI	10.13 -	985	1075	E90-15-021-14-22	A, 18, 35, 78, 161, 170, 188			30	30					F11-15-021-01-VA	F11-15-007-15-HA	ABE
1.8 TFSI, 1.6 TDI, 2.0 TDI	10.13 -	1070	1075	E90-15-021-10-22	A, 18, 35, 78, 161, 170, 188			30	30					F11-15-021-02-VA	F11-15-007-15-HA	ABE
S3 quattro	10.13 -	1090	1060	E90-15-021-13-22	A, 18, 34, 78, 161, 170, 190			20	10					F11-15-021-12-VA	F11-15-021-13-HA	ABE
1.8 TFSI, 1.6 TDI, 2.0 TDI	10.13 -	1070	1075	E90-15-021-19-22	A, 18, 34, 78, 161, 170, 190			30	30					F11-15-021-02-VA	F11-15-007-15-HA	ABE
Pro-Street-S (Gewindefahrwerke - höhenverstellbar | *Coil-Overs-Adjustable Ride Hight*)																
1.4 TFSI, 1.6 TDI	10.13 -	980	1050	PSS65-15-021-12-22	A, 24, 25, 34, 45, 160, 170			30-60	30-55							T
1.8 TFSI, 1.6 TDI, 2.0 TDI	10.13 -	1090	1050	PSS65-15-021-13-22	A, 24, 25, 34, 45, 160, 170			30-60	30-55							T
1.4 TFSI, 1.6 TDI	10.13 -	980	1050	PSS65-15-021-14-22	A, 24, 25, 35, 45, 160, 170			30-60	30-55							T
1.8 TFSI, 1.6 TDI, 2.0 TDI	10.13 -	1090	1050	PSS65-15-021-15-22	A, 24, 25, 35, 45, 160, 170			30-60	30-55							T

AUDI

AUDI

Modell *Model*	Baujahr *Year*	Achslast Vorne kg *Front Axle Load kg*	Achslast Hinten kg *Rear Axle Load kg*	Artikel-Nr. *Part-No.*	Hinweise *Notes*	ab Nachtrag ...xx BE *from suppl. ...xx of type approval*	bis Nachtrag ...xx BE *to suppl. ...xx of type approval*	ca. Tieferl. Vorne mm *ca. Lowering Front mm*	ca. Tieferl. Hinten mm *ca. Lowering Rear mm*	Ø Vorne mm *Ø Front mm*	Ø Hinten mm *Ø Rear mm*	Verstellbarkeit Vorne *Adjustable Front*	Verstellbarkeit Hinten *Adjustable Rear*	Ersatzteilbez. Vorne *Spare Part Marking Front*	Ersatzteilbez. Hinten *Spare Part Marking Rear*	Gutachten *Homologation*
A3 Limousine (8VS) ***A3 Sedan (8VS)***																
Pro-Kit (Performance Fahrwerksfedern | *Performance Springs*)																
1.2 TFSI, 1.4 TFSI, 1.8 TFSI, 1.6 TDI	05.13 -	985	990	E10-15-021-03-22	A, 18, 20, 171			30	30					F11-15-021-01-VA	F1540002	ABE
1.2 TFSI, 1.4 TFSI, 1.8 TFSI, 1.6 TDI	05.13 -	985	1065	E10-15-021-05-22	A, 18, 20, 170			20	15					F11-15-021-01-VA	F11-15-021-05-HA	ABE
1.8 TFSI, 1.6 TDI, 2.0 TDI	05.13 -	1070	990	E10-15-021-04-22	A, 18, 20, 171			30	30					F11-15-021-02-VA	F1540002	ABE
1.6 TDI, 1.8 TFSI, 2.0 TDI	05.13 -	1070	1065	E10-15-021-06-22	A, 18, 20, 170			20	15					F11-15-021-02-VA	F11-15-021-05-HA	ABE
1.8 TFSI quattro, 1.6 TDI quattro, 2.0 TDI quattro	11.13 -	1070	1075	E10-15-021-10-22	A, 18, 170			30	30					F11-15-021-02-VA	F11-15-007-15-HA	ABE
2.0 TDI quattro	11.13 -	1090	1060	E10-15-021-13-22	A, 18			20	10					F11-15-021-12-VA	F11-15-021-13-HA	ABE
S3 quattro	10.13 -	1090	1060	E10-15-021-13-22	A, 18			10	10					F11-15-021-12-VA	F11-15-021-13-HA	ABE
Sportline (Performance Fahrwerksfedern Sport | *Sport Performance Springs*)																
1.2 TFSI, 1.4 TFSI, 1.8 TFSI, 1.6 TDI	09.12 -	970	1070	E20-15-021-01-22	A, 18, 20, 170			45	35-40					F21-15-021-01-VA	F21-15-021-01-HA	ABE
1.6 TDI, 1.8 TFSI, 2.0 TDI	09.12 -	1070	1070	E20-15-021-02-22	A, 18, 20, 170			45	35-40					F21-15-021-02-VA	F21-15-021-01-HA	ABE
1.4 TFSI, 1.8 TFSI	09.12 -	970	1010	E20-15-021-03-22	A, 18, 20, 171			45	35-40					F21-15-021-01-VA	F21-15-021-03-HA	ABE
1.8 TFSI, 2.0 TDI	09.12 -	1070	1010	E20-15-021-04-22	A, 18, 20, 171			45	35-40					F21-15-021-02-VA	F21-15-021-03-HA	ABE
1.8 TFSI quattro, 1.6 TDI quattro, 2.0 TDI quattro	04.12 -	1070	1075	E20-15-021-05-22	A, 18, 170			45	35-40					F21-15-021-02-VA	F21-15-021-05-HA	ABE
S3 quattro	09.12 -	1100	1080	E20-15-021-06-22	A, 18			20	15-20					F21-15-021-06-VA	F21-15-021-06-HA	ABE
2.0 TDI quattro, 2.0 TFSI quattro	10.13 -	1100	1080	E20-15-021-06-22	A, 18			20-25	15-20					F21-15-021-06-VA	F21-15-021-06-HA	ABE
Anti-Roll-Kit (Performance Stabilisatoren | *Performance Sway Bars*)																
1.2 TFSI, 1.4 TFSI, 1.8 TFSI, 1.6 TDI	05.13 -			E40-15-021-01-11	A, 18, 20, 22, 45, 170					28 Rohr 28 *tube*	25 Rohr 25 *tube*	2-fach verstellbar *2-way adjustable*	nicht verstellbar *not adjustable*	AS41-15-021-01-VA	AS41-15-021-01-HA	T
1.8 TFSI quattro, 1.6 TDI quattro, 2.0 TDI quattro, S3 quattro	05.13 -			E40-15-021-02-11	A, 18, 22, 45, 170					28 Rohr 28 *tube*	25 Rohr 25 *tube*	2-fach verstellbar *2-way adjustable*	2-fach verstellbar *2-way adjustable*	AS41-15-021-02-VA	AS41-15-021-02-HA	T
1.2 TFSI, 1.4 TFSI, 1.8 TFSI, 1.6 TDI	05.13 -			E40-15-021-03-11	A, 18, 20, 22, 45, 171					28 Rohr 28 *tube*	25	2-fach verstellbar *2-way adjustable*	nicht verstellbar *not adjustable*	AS41-15-021-01-VA	AS41-15-021-03-HA	T
Pro-Tronic (Elektronische Performance Fahrwerksmodule | *Electronic Performance Suspension Moduls*)																
Alle Motorisierungen / *all motorisation*	05.13 -			AM65-15-021-02-22	A, 175											
B12 Pro-Kit (Performance Komplettfahrwerke | *Performance Springs+Shocks*)																
1.2 TFSI, 1.4 TFSI, 1.8 TFSI, 1.6 TDI	05.13 -	985	1065	E90-15-021-05-22	A, 18, 20, 35, 78, 161, 170, 188			30	30					F11-15-021-01-VA	F11-15-021-05-HA	ABE
1.8 TFSI, 1.6 TDI, 2.0 TDI	05.13 -	1070	1065	E90-15-021-06-22	A, 18, 20, 35, 78, 161, 170, 188			30	30					F11-15-021-02-VA	F11-15-021-05-HA	ABE
1.4 TFSI, 1.8 TFSI	05.13 -	985	990	E90-15-021-03-22	A, 18, 20, 35, 78, 161, 171, 189			30	30					F11-15-021-01-VA	F1540002	ABE
1.8 TFSI, 2.0 TDI	05.13 -	1070	990	E90-15-021-04-22	A, 18, 20, 35, 78, 161, 171, 189			30	30					F11-15-021-02-VA	F1540002	ABE
1.8 TFSI quattro, 1.6 TDI quattro, 2.0 TDI quattro	11.13 -	1070	1075	E90-15-021-10-22	A, 18, 35, 78, 161, 170, 188			30	30					F11-15-021-02-VA	F11-15-021-15-HA	ABE
2.0 TDI quattro	11.13 -	1090	1060	E90-15-021-13-22	A, 18, 34, 78, 161, 170, 190			20	10					F11-15-021-12-VA	F11-15-021-13-HA	ABE
S3 quattro	10.13 -	1090	1060	E90-15-021-13-22	A, 18, 34, 78, 161, 170, 190			10	10					F11-15-021-12-VA	F11-15-021-13-HA	ABE
1.2 TFSI, 1.4 TFSI, 1.8 TFSI, 1.6 TDI	05.13 -	985	1065	E90-15-021-20-22	A, 18, 20, 34, 78, 161, 170, 190			30	30					F11-15-021-01-VA	F11-15-021-05-HA	ABE
1.8 TFSI, 1.6 TDI, 2.0 TDI	05.13 -	1070	1065	E90-15-021-21-22	A, 18, 20, 34, 78, 161, 170, 190			30	30					F11-15-021-02-VA	F11-15-021-05-HA	ABE
1.4 TFSI, 1.8 TFSI	05.13 -	985	990	E90-15-021-17-22	A, 18, 20, 34, 78, 161, 171, 191			30	30					F11-15-021-01-VA	F1540002	ABE
1.8 TFSI, 2.0 TDI	05.13 -	1070	990	E90-15-021-18-22	A, 18, 20, 34, 78, 161, 171, 191			30	30					F11-15-021-02-VA	F1540002	ABE
1.8 TFSI quattro, 1.6 TDI quattro, 2.0 TDI quattro	11.13 -	1070	1075	E90-15-021-19-22	A, 18, 34, 78, 161, 170, 190			30	30					F11-15-021-02-VA	F11-15-021-15-HA	ABE
B12 Sportline (Performance Komplettfahrwerke Sport | *Sport Performance Springs+Shocks*)																
1.2 TFSI, 1.4 TFSI, 1.8 TFSI, 1.6 TDI	05.13 -	970	1070	E95-15-021-01-22	A, 18, 20, 35, 78, 161, 170, 188			45	35-40					F21-15-021-01-VA	F21-15-021-01-HA	ABE
1.8 TFSI, 1.6 TDI, 2.0 TDI	09.12 -	1070	1010	E95-15-021-02-22	A, 18, 20, 35, 78, 161, 170, 188			45	35-40					F11-15-021-02-VA	F11-15-021-01-HA	ABE
1.4 TFSI, 1.8 TFSI	05.13 -	970	1010	E95-15-021-03-22	A, 18, 20, 35, 78, 161, 171, 189			45	35-40					F21-15-021-01-VA	F21-15-021-03-HA	ABE
1.8 TFSI, 2.0 TDI	05.13 -	1070	1010	E95-15-021-04-22	A, 18, 20, 35, 78, 161, 171, 189			45	35-40					F21-15-021-02-VA	F21-15-021-03-HA	ABE
1.2 TFSI, 1.4 TFSI, 1.8 TFSI, 1.6 TDI	05.13 -	970	1070	E95-15-021-15-22	A, 18, 20, 34, 78, 161, 170, 190			45	35-40					F21-15-021-01-VA	F21-15-021-01-HA	ABE
1.8 TFSI, 1.6 TDI, 2.0 TDI	05.13 -	1070	1070	E95-15-021-16-22	A, 18, 20, 34, 78, 161, 170, 190			45	35-40					F21-15-021-02-VA	F21-15-021-01-HA	ABE
1.4 TFSI, 1.8 TFSI	05.13 -	970	1010	E95-15-021-17-22	A, 18, 20, 34, 78, 161, 171, 191			45	35-40					F21-15-021-01-VA	F21-15-021-03-HA	ABE
1.8 TFSI, 2.0 TDI	05.13 -	1070	1010	E95-15-021-18-22	A, 18, 20, 34, 78, 161, 171, 191			45	35-40					F21-15-021-02-VA	F21-15-021-03-HA	ABE

AUDI

Modell *Model*	Baujahr *Year*	Achslast Vorne kg *Front Axle Load kg*	Achslast Hinten kg *Rear Axle Load kg*	Artikel-Nr. *Part-No.*	Hinweise *Notes*	ab Nachtrag ...xx BE *from suppl. ...xx of type approval*	bis Nachtrag ...xx BE *to suppl. ...xx of type approval*	ca. Tieferl. Vorne mm *ca. Lowering Front mm*	ca. Tieferl. Hinten mm *ca. Lowering Rear mm*	Ø Vorne mm *Ø Front mm*	Ø Hinten mm *Ø Rear mm*	Verstellbarkeit Vorne *Adjustable Front*	Verstellbarkeit Hinten *Adjustable Rear*	Ersatzteilbez. Vorne *Spare Part Marking Front*	Ersatzteilbez. Hinten *Spare Part Marking Rear*	Gutachten *Homologation*
A3 Limousine (8VS) ***A3 Sedan (8VS)***																
Pro-Street-S (Gewindefahrwerke - höhenverstellbar | *Coil-Overs-Adjustable Ride Hight*)																
1.2 TFSI, 1.4 TFSI, 1.6 TDI, 1.8 TFSI	05.13 -	980	975	PSS65-15-021-01-22	A, 20, 24, 25, 35, 45, 160, 170			30-60	30-55							T
1.6 TDI, 1.8 TFSI, 2.0 TDI	05.13 -	1055	975	PSS65-15-021-02-22	A, 20, 24, 25, 35, 45, 160, 170			30-60	30-55							T
1.2 TFSI, 1.4 TFSI, 1.6 TDI, 1.8 TFSI	05.13 -	980	975	PSS65-15-021-03-22	A, 20, 24, 25, 34, 45, 160, 171			30-60	30-55							T
1.6 TDI, 1.8 TFSI, 2.0 TDI	05.13 -	1055	975	PSS65-15-021-04-22	A, 20, 24, 25, 34, 45, 160, 171			30-60	30-55							T
1.8 TFSI quattro, 1.6 TDI quattro, 2.0 TDI quattro	05.13 -	1090	1025	PSS65-15-021-05-22	A, 24, 25, 34, 45, 160, 170			30-60	30-55							T
S3 quattro	05.13 -	1090	1025	PSS65-15-021-05-22	A, 24, 25, 34, 45, 160, 170			0-30	5-30							T
A3 Sportback (8PA)																
Pro-Kit (Performance Fahrwerksfedern | *Performance Springs*)																
1.2 TSI, 1.6, 1.6 FSI	09.04 -	980	1005	E10-15-007-05-22	A, 18, 20			30	30					F11-15-007-01-VA	F11-15-007-01-HA	ABE
1.2 TSI, 1.4 TFSI, 1.6, 1.6 FSI, 1.6 TDI, 1.8 TFSI, 1.9 TDI, 2.0, 2.0 FSI, 2.0 TFSI	09.04 -	1065	1005	E10-15-007-06-22	A, 18, 20			30	30					F11-15-007-02-VA	F11-15-007-01-HA	ABE
S3 quattro, RS3 quattro	09.04 -	1155		E10-15-007-14-20	A, 18			20						F11-15-007-14-VA		T
1.6 TDI, 1.8 TFSI, 2.0 TDI, 2.0 TDI 16V, 2.0 TFSI	09.04 -	1155	1005	E10-15-007-07-22	A, 18, 20			30	30					F11-15-007-03-VA	F11-15-007-01-HA	ABE
1.8 TFSI quattro, 2.0 TDI 16V quattro, 2.0 TDI quattro, 2.0 TFSI quattro	09.04 -	1155	1125	E10-15-007-10-22	A, 18			30	30					F11-15-007-03-VA	F11-15-007-04-HA	ABE
3.2 V6 quattro	09.04 - 05.09	1155	1125	E10-15-007-08-22	A, 18			30	30					F11-15-007-04-VA	F11-15-007-04-HA	ABE
Sportline (Performance Fahrwerksfedern Sport | *Sport Performance Springs*)																
1.2 TSI, 1.4 TFSI, 1.6, 1.6 FSI, 1.9 TDI, 2.0, 2.0 FSI	09.04 -	1040	1005	E20-15-007-03-22	A, 18, 20			45-50	35-40					F21-15-007-01-VA	F21-15-007-03-HA	ABE
1.4 TFSI, 1.6 TDI, 1.8 TFSI, 1.9 TDI, 2.0, 2.0 FSI, 2.0 TDI, 2.0 TDI 16V, 2.0 TFSI	09.04 -	1130	1005	E20-15-007-04-22	A, 18, 20			45-50	35-40					F21-15-007-02-VA	F21-15-007-03-HA	ABE
Anti-Roll-Kit (Performance Stabilisatoren | *Performance Sway Bars*)																
1.2 TSI, 1.4 TFSI, 1.6, 1.6 FSI, 1.6 TDI, 1.8 TFSI, 1.9 TDI, 2.0, 2.0 FSI, 2.0 TDI, 2.0 TDI 16V, 2.0 TFSI	09.04 -			E40-15-007-01-11	A, 18, 20, 22, 45					26	23	2-fach verstellbar *2-way adjustable*	2-fach verstellbar *2-way adjustable*	AS41-85-014-01-VA	AS41-85-014-01-HA	T
Pro-Tronic (Elektronische Performance Fahrwerksmodule | *Electronic Performance Suspension Moduls*)																
Alle Motorisierungen / *all motorisation*	09.04 -			AM65-15-007-01-22	A, 175											
B12 Pro-Kit (Performance Komplettfahrwerke | *Performance Springs+Shocks*)																
1.6 FSI Schaltgetriebe, 1.6 Schaltgetriebe *1.6 FSI manual transmission, 1.6 manual transmission*	09.04 -	980	1005	E90-15-007-10-22	A, 18, 20, 34, 78, 101, 122, 161			30	30					F11-15-007-01-VA	F11-15-007-01-HA	ABE
1.6 FSI Schaltgetriebe, 1.6 Schaltgetriebe *1.6 FSI manual transmission, 1.6 manual transmission*	09.04 -	980	1005	E90-15-007-11-22	A, 18, 20, 35, 78, 101, 124, 161			30	30					F11-15-007-01-VA	F11-15-007-01-HA	ABE
1.4 TFSI, 1.6, 1.6 FSI, 1.6 TDI, 1.8 TFSI, 1.9 TDI, 2.0, 2.0 FSI, 2.0 TFSI	09.04 -	1065	1005	E90-15-007-12-22	A, 18, 20, 35, 78, 122, 161			30	30					F11-15-007-02-VA	F11-15-007-01-HA	ABE
1.4 TFSI, 1.6, 1.6 FSI, 1.6 TDI, 1.8 TFSI, 1.9 TDI, 2.0, 2.0 FSI, 2.0 TFSI	09.04 -	1065	1005	E90-15-007-13-22	A, 18, 20, 34, 78, 124, 161			30	30					F11-15-007-02-VA	F11-15-007-01-HA	ABE
1.6 TDI, 1.8 TFSI, 2.0 TDI, 2.0 TDI 16V, 2.0 TFSI	09.04 -	1155	1005	E90-15-007-14-22	A, 18, 20, 35, 78, 122, 161			30	30					F11-15-007-03-VA	F11-15-007-01-HA	ABE
3.2 V6 quattro	09.04 - 05.09	1155	1125	E90-15-007-16-22	A, 18, 34, 78, 124, 161			30	30					F11-15-007-04-VA	F11-15-007-04-HA	ABE
1.8 TFSI quattro, 2.0 TDI 16V quattro, 2.0 TDI quattro, 2.0 TFSI quattro	09.04 -	1155	1125	E90-15-007-17-22	A, 18, 35, 78, 122, 161			30	30					F11-15-007-03-VA	F11-15-007-04-HA	ABE
1.8 TFSI quattro, 2.0 TDI 16V quattro, 2.0 TDI quattro, 2.0 TFSI quattro	09.04 -	1155	1125	E90-15-007-18-22	A, 18, 34, 78, 124, 161			30	30					F11-15-007-03-VA	F11-15-007-04-HA	ABE
1.6 TDI, 1.8 TFSI, 2.0 TDI, 2.0 TDI 16V, 2.0 TFSI	09.04 -	1155	1005	E90-15-007-19-22	A, 18, 20, 34, 78, 124, 161			30	30					F11-15-007-03-VA	F11-15-007-01-HA	ABE
B12 Sportline (Performance Komplettfahrwerke Sport | *Sport Performance Springs+Shocks*)																
1.4 TFSI, 1.6, 1.6 FSI, 1.6 TDI, 1.9 TDI, 2.0, 2.0 FSI	09.04 -	1040	1005	E95-15-007-05-22	A, 18, 20, 35, 78, 122, 161			45-50	35-40					F21-15-007-01-VA	F21-15-007-03-HA	ABE
1.4 TFSI, 1.6, 1.6 FSI, 1.6 TDI, 1.9 TDI, 2.0, 2.0 FSI	09.04 -	1040	1010	E95-15-007-06-22	A, 18, 20, 34, 78, 124, 161			45-50	35-40					F21-15-007-01-VA	F21-15-007-03-HA	ABE
1.4 TFSI, 1.6 TDI, 1.8 TFSI, 1.9 TDI, 2.0, 2.0 FSI, 2.0 TDI, 2.0 TDI 16V, 2.0 TFSI	09.04 -	1130	1005	E95-15-007-07-22	A, 18, 20, 35, 78, 122, 161			45-50	35-40					F21-15-007-02-VA	F21-15-007-03-HA	ABE
1.4 TFSI, 1.6 TDI, 1.8 TFSI, 1.9 TDI, 2.0, 2.0 FSI, 2.0 TDI, 2.0 TDI 16V, 2.0 TFSI	09.04 -	1130	1010	E95-15-007-08-22	A, 18, 20, 34, 78, 124, 161			45-50	35-40					F21-15-007-02-VA	F21-15-007-03-HA	ABE
Pro-Street-S (Gewindefahrwerke - höhenverstellbar | *Coil-Overs-Adjustable Ride Hight*)																
1.2 TSI, 1.4 TFSI, 1.6, 1.6 FSI, 1.6 TDI, 1.8 TFSI, 1.9 TDI, 2.0, 2.0 FSI, 2.0 TDI, 2.0 TDI 16V	09.04 -	1035	1150	PSS65-85-014-01-22	A, 20, 24, 34, 45, 101, 160			35-65	35-65							T
1.2 TSI, 1.4 TFSI, 1.6, 1.6 FSI, 1.6 TDI, 1.8 TFSI, 1.9 TDI, 2.0, 2.0 FSI, 2.0 TDI, 2.0 TDI 16V	09.04 -	1035	1150	PSS65-85-014-02-22	A, 20, 24, 35, 45, 101, 160			35-65	35-65							T
1.2 TSI, 1.4 TFSI, 1.6, 1.6 FSI, 1.6 TDI, 1.8 TFSI, 1.9 TDI, 2.0, 2.0 FSI, 2.0 TDI, 2.0 TDI 16V	09.04 -	1105	1150	PSS65-85-014-03-22	A, 20, 24, 34, 45, 101, 160			35-65	35-65							T
1.2 TSI, 1.4 TFSI, 1.6, 1.6 FSI, 1.6 TDI, 1.8 TFSI, 1.9 TDI, 2.0, 2.0 FSI, 2.0 TDI, 2.0 TDI 16V	09.04 -	1105	1150	PSS65-85-014-04-22	A, 20, 24, 35, 45, 101, 160			35-65	35-65							T
1.8 TFSI quattro, 2.0 TFSI quattro	09.04 -	1105	1160	PSS65-15-007-01-22	A, 24, 34, 45, 160			35-65	35-65							T
1.2 TSI, 1.4 TFSI, 1.6, 1.6 FSI, 1.6 TDI, 1.8 TFSI, 1.9 TDI, 2.0, 2.0 FSI, 2.0 TDI, 2.0 TDI 16V	09.04 -	1170	1150	PSS65-85-014-05-22	A, 20, 24, 34, 45, 101, 160			35-65	35-65							T
1.2 TSI, 1.4 TFSI, 1.6, 1.6 FSI, 1.6 TDI, 1.8 TFSI, 1.9 TDI, 2.0, 2.0 FSI, 2.0 TDI, 2.0 TDI 16V	09.04 -	1170	1150	PSS65-85-014-06-22	A, 20, 24, 35, 45, 101, 160			35-65	35-65							T
2.0 TDI quattro, 2.0 TDI 16V quattro, 3.2 V6 quattro, S3 quattro	09.04 -	1170	1160	PSS65-15-007-02-22	A, 24, 34, 45, 160			35-65	35-65							T

Modell *Model*	Baujahr *Year*	Achslast Vorne kg *Front Axle Load kg*	Achslast Hinten kg *Rear Axle Load kg*	Artikel-Nr. *Part-No.*	Hinweise *Notes*	ab Nachtrag ...xx BE *from suppl. ...xx of type approval*	bis Nachtrag ...xx BE *to suppl. ...xx of type approval*	ca. Tieferl. Vorne mm *ca. Lowering Front mm*	ca. Tieferl. Hinten mm *ca. Lowering Rear mm*	Ø Vorne mm *Ø Front mm*	Ø Hinten mm *Ø Rear mm*	Verstellbarkeit Vorne *Adjustable Front*	Verstellbarkeit Hinten *Adjustable Rear*	Ersatzteilbez. Vorne *Spare Part Marking Front*	Ersatzteilbez. Hinten *Spare Part Marking Rear*	Gutachten *Homologation*
A3 Sportback (8VA)																
Pro-Kit (Performance Fahrwerksfedern | *Performance Springs*)																
1.2 TFSI, 1.4 TFSI, 1.6 TDI, 1.8 TFSI	09.12 -	985	1065	E10-15-021-05-22	A, 18, 20, 170			30	30					F11-15-021-01-VA	F11-15-021-05-HA	ABE
1.6 TDI, 1.8 TFSI, 2.0 TDI	09.12 -	1070	1065	E10-15-021-06-22	A, 18, 20, 170			30	30					F11-15-021-02-VA	F11-15-021-05-HA	ABE
1.2 TFSI, 1.4 TFSI, 1.6 TDI, 1.8 TFSI	09.12 -	985	1000	E10-15-021-08-22	A, 18, 20, 171			30	30					F11-15-021-01-VA	F7907002	ABE
1.6 TDI, 1.8 TFSI, 2.0 TDI	09.12 -	1070	1000	E10-15-021-09-22	A, 18, 20, 171			30	30					F11-15-021-02-VA	F7907002	ABE
1.8 TFSI quattro, 1.6 TDI quattro, 2.0 TDI quattro	09.12 -	1070	1075	E10-15-021-10-22	A, 18, 170			30	30					F11-15-021-02-VA	F11-15-007-15-HA	ABE
2.0 TDI quattro	10.12 -	1090	1060	E10-15-021-13-22	A, 18			20	10					F11-15-021-12-VA	F11-15-021-13-HA	ABE
S3 quattro, RS3 quattro	10.12 -	1090	1060	E10-15-021-13-22	A, 18			10	10					F11-15-021-12-VA	F11-15-021-13-HA	ABE
1.4 TFSI e-tron	05.14 -	1100	1220	E10-15-021-15-22	A, 18, 20			35	30					F11-85-041-01-VA	F11-15-007-04-HA	T
1.4 TFSI g-tron	11.13 -	985	990	E10-15-021-16-22	A, 18, 20, 171			30	30					F11-15-021-01-VA	F7908002	T
Sportline (Performance Fahrwerksfedern Sport | *Sport Performance Springs*)																
1.2 TFSI, 1.4 TFSI, 1.8 TFSI, 1.6 TDI, 2.0 TDI	09.12 -	970	1070	E20-15-021-01-22	A, 18, 20, 170			45	35-40					F21-15-021-01-VA	F21-15-021-01-HA	ABE
1.8 TFSI, 1.6 TDI, 2.0 TDI	09.12 -	1070	1070	E20-15-021-02-22	A, 18, 20, 170			45	35-40					F21-15-021-02-VA	F21-15-021-01-HA	ABE
1.2 TFSI, 1.4 TFSI, 1.8 TFSI, 1.6 TDI, 2.0 TDI	09.12 -	970	1010	E20-15-021-03-22	A, 18, 20, 171			45	35-40					F21-15-021-01-VA	F21-15-021-03-HA	ABE
1.6 TDI, 1.8 TFSI, 2.0 TDI	09.12 -	1070	1010	E20-15-021-04-22	A, 18, 20, 171			45	35-40					F21-15-021-02-VA	F21-15-021-03-HA	ABE
1.8 TFSI quattro, 1.6 TDI quattro, 2.0 TDI quattro	09.12 -	1070	1075	E20-15-021-05-22	A, 18, 170			45	35-40					F21-15-021-02-VA	F21-15-021-05-HA	ABE
2.0 TDI quattro	10.12 -	1100	1080	E20-15-021-06-22	A, 18			30	15-20					F21-15-021-06-VA	F21-15-021-06-HA	ABE
S3 quattro	10.12 -	1100	1080	E20-15-021-06-22	A, 18			20	15-20					F21-15-021-06-VA	F21-15-021-06-HA	ABE
RS3 quattro	10.12 -	1100	1080	E20-15-021-06-22	A, 18			25	15					F21-15-021-06-VA	F21-15-021-06-HA	ABE
Anti-Roll-Kit (Performance Stabilisatoren | *Performance Sway Bars*)																
1.2 TFSI, 1.4 TFSI, 1.8 TFSI, 1.6 TDI, 2.0 TDI	09.12 -			E40-15-021-01-11	A, 18, 20, 22, 45, 170					28 Rohr *28 tube*	25 Rohr *28 tube*	2-fach verstellbar *2-way adjustable*	nicht verstellbar *not adjustable*	AS41-15-021-01-VA	AS41-15-021-01-HA	T
1.8 TFSI quattro, 1.6 TDI quattro, 2.0 TDI quattro, S3 quattro	09.12 -			E40-15-021-02-11	A, 18, 22, 45, 170					28 Rohr *28 tube*	25 Rohr *28 tube*	2-fach verstellbar *2-way adjustable*	2-fach verstellbar *2-way adjustable*	AS41-15-021-02-VA	AS41-15-021-02-HA	T
1.2 TFSI, 1.4 TFSI, 1.8 TFSI, 1.6 TDI, 2.0 TDI	09.12 -			E40-15-021-03-11	A, 18, 20, 22, 45 171					28 Rohr *28 tube*	25	2-fach verstellbar *2-way adjustable*	nicht verstellbar *not adjustable*	AS41-15-021-01-VA	AS41-15-021-03-HA	T
Pro-Tronic (Elektronische Performance Fahrwerksmodule | *Electronic Performance Suspension Moduls*)																
Alle Motorisierungen / *all motorisation*	09.12 -			AM65-15-021-02-22	A, 175, 222											
RS3 quattro	09.12 -			AM65-15-022-01-22	A, 175											
B12 Pro-Kit (Performance Komplettfahrwerke | *Performance Springs+Shocks*)																
1.2 TFSI, 1.4 TFSI, 1.8 TFSI, 1.6 TDI	09.12 -	985	1065	E90-15-021-05-22	A, 18, 20, 35, 78, 161, 170, 188			30	30					F11-15-021-01-VA	F11-15-021-05-HA	ABE
1.8 TFSI, 1.6 TDI, 2.0 TDI	09.12 -	1070	1065	E90-15-021-06-22	A, 18, 20, 35, 78, 161, 170, 188			30	30					F11-15-021-02-VA	F11-15-021-05-HA	ABE
1.2 TFSI, 1.4 TFSI, 1.8 TFSI, 1.6 TDI	09.12 -	985	1000	E90-15-021-08-22	A, 18, 20, 35, 78, 161, 171, 189			30	30					F11-15-021-01-VA	F7907002	ABE
1.8 TFSI, 1.6 TDI, 2.0 TDI	09.12 -	1070	1000	E90-15-021-09-22	A, 18, 20, 35, 78, 161, 171, 189			30	30					F11-15-021-02-VA	F7907002	ABE
1.8 TFSI quattro, 1.6 TDI quattro, 2.0 TDI quattro	09.12 -	1070	1075	E90-15-021-10-22	A, 18, 35, 78, 161, 170, 188			30	30					F11-15-021-02-VA	F11-15-007-15-HA	ABE
2.0 TDI quattro	10.12 -	1090	1060	E90-15-021-13-22	A, 18, 34, 78, 161, 170, 190			20	10					F11-15-021-12-VA	F11-15-021-13-HA	ABE
S3 quattro	10.12 -	1090	1060	E90-15-021-13-22	A, 18, 34, 78, 161, 170, 190			10	10					F11-15-021-12-VA	F11-15-021-13-HA	ABE
1.2 TFSI, 1.4 TFSI, 1.8 TFSI, 1.6 TDI	09.12 -	985	1000	E90-15-021-20-22	A, 18, 20, 34, 78, 161, 170, 190			30	30					F11-15-021-01-VA	F11-15-021-05-HA	ABE
1.8 TFSI, 1.6 TDI, 2.0 TDI	09.12 -	1070	1065	E90-15-021-21-22	A, 18, 20, 34, 78, 161, 170, 190			30	30					F11-15-021-02-VA	F11-15-021-05-HA	ABE
1.2 TFSI, 1.4 TFSI, 1.8 TFSI, 1.6 TDI	09.12 -	985	990	E90-15-021-22-22	A, 18, 20, 34, 78, 161, 171, 191			30	30					F11-15-021-01-VA	F7907002	ABE
1.8 TFSI, 1.6 TDI, 2.0 TDI	09.12 -	1070	990	E90-15-021-23-22	A, 18, 20, 34, 78, 161, 171, 191			30	30					F11-15-021-02-VA	F7907002	ABE
1.8 TFSI quattro, 1.6 TDI quattro, 2.0 TDI quattro	09.12 -	1070	1075	E90-15-021-19-22	A, 18, 34, 78, 161, 170, 190			30	30					F11-15-021-02-VA	F11-15-007-15-HA	ABE
B12 Sportline (Performance Komplettfahrwerke Sport | *Sport Performance Springs+Shocks*)																
1.2 TFSI, 1.4 TFSI, 1.8 TFSI, 1.6 TDI	09.12 -	970	1070	E95-15-021-01-22	A, 18, 20, 35, 78, 161, 170, 188			45	35-40					F21-15-021-01-VA	F21-15-021-01-HA	ABE
1.8 TFSI, 1.6 TDI, 2.0 TDI	09.12 -	1070	1010	E95-15-021-02-22	A, 18, 20, 35, 78, 161, 170, 188			45	35-40					F11-15-021-02-VA	F11-15-021-01-HA	ABE
1.2 TFSI, 1.4 TFSI, 1.8 TFSI, 1.6 TDI	09.12 -	970	1010	E95-15-021-03-22	A, 18, 20, 35, 78, 161, 171, 189			45	35-40					F21-15-021-01-VA	F21-15-021-03-HA	ABE
1.8 TFSI, 1.6 TDI, 2.0 TDI	09.12 -	1070	1010	E95-15-021-04-22	A, 18, 20, 35, 78, 161, 171, 189			45	35-40					F21-15-021-02-VA	F21-15-021-03-HA	ABE
1.8 TFSI quattro, 1.6 TDI quattro, 2.0 TDI quattro	09.12 -	1070	1075	E95-15-021-10-22	A, 18, 35, 78, 161, 170, 188			45	35-40					F21-15-021-02-VA	F21-15-021-05-HA	ABE
2.0 TDI quattro	10.12 -	1100	1080	E95-15-021-12-22	A, 18, 34, 78, 161, 170, 190			20	15-20					F21-15-021-06-VA	F21-15-021-06-HA	ABE

AUDI

Modell *Model*	Baujahr *Year*	Achslast Vorne kg *Front Axle Load kg*	Achslast Hinten kg *Rear Axle Load kg*	Artikel-Nr. *Part-No.*	Hinweise *Notes*	ab Nachtrag ...xx BE *from suppl. ...xx of type approval*	bis Nachtrag ...xx BE *to suppl. ...xx of type approval*	ca. Tieferl. Vorne mm *ca. Lowering Front mm*	ca. Tieferl. Hinten mm *ca. Lowering Rear mm*	Ø Vorne mm *Ø Front mm*	Ø Hinten mm *Ø Rear mm*	Verstellbarkeit Vorne *Adjustable Front*	Verstellbarkeit Hinten *Adjustable Rear*	Ersatzteilbez. Vorne *Spare Part Marking Front*	Ersatzteilbez. Hinten *Spare Part Marking Rear*	Gutachten *Homologation*
A3 Sportback (8VA)																
B12 Sportline (Performance Komplettfahrwerke Sport | *Sport Performance Springs+Shocks*)																
S3 quattro	10.12 -	1100	1080	E95-15-021-12-22	A, 18, 34, 78, 161, 170, 190			20	15-20					F21-15-021-06-VA	F21-15-021-06-HA	ABE
1.2 TFSI, 1.4 TFSI, 1.8 TFSI, 1.6 TDI	09.12 -	970	1070	E95-15-021-15-22	A, 18, 20, 34, 78, 161, 170, 190			45	35-40					F21-15-021-01-VA	F21-15-021-01-HA	ABE
1.8 TFSI, 1.6 TDI, 2.0 TDI	09.12 -	1070	1070	E95-15-021-16-22	A, 18, 20, 34, 78, 161, 170, 190			45	35-40					F21-15-021-02-VA	F21-15-021-01-HA	ABE
1.2 TFSI, 1.4 TFSI, 1.8 TFSI, 1.6 TDI	09.12 -	970	1010	E95-15-021-17-22	A, 18, 20, 34, 78, 161, 171, 191			45	35-40					F21-15-021-01-VA	F21-15-021-03-HA	ABE
1.8 TFSI, 1.6 TDI, 2.0 TDI	09.12 -	1070	1010	E95-15-021-18-22	A, 18, 20, 34, 78, 161, 171, 191			45	35-40					F21-15-021-02-VA	F21-15-021-03-HA	ABE
1.8 TFSI quattro, 1.6 TDI quattro, 2.0 TDI quattro	09.12 -	1070	1075	E95-15-021-19-22	A, 18, 34, 78, 161, 170, 190			45	35-40					F21-15-021-02-VA	F21-15-021-05-HA	ABE
Pro-Street-S (Gewindefahrwerke - höhenverstellbar | *Coil-Overs-Adjustable Ride Hight*)																
1.2 TFSI, 1.4 TFSI, 1.8 TFSI, 1.6 TDI, 2.0 TDI	09.12 -	980	975	PSS65-15-021-01-22	A, 20, 24, 25, 35, 45, 160, 170			30-60	30-55							T
1.2 TFSI, 1.4 TFSI, 1.8 TFSI, 1.6 TDI, 2.0 TDI	09.12 -	1055	975	PSS65-15-021-02-22	A, 20, 24, 25, 35, 45, 160, 170			30-60	30-55							T
1.2 TFSI, 1.4 TFSI, 1.8 TFSI, 1.6 TDI, 2.0 TDI	09.12 -	980	975	PSS65-15-021-03-22	A, 20, 24, 25, 34, 45, 160, 171			30-60	30-55							T
1.2 TFSI, 1.4 TFSI, 1.8 TFSI, 1.6 TDI, 2.0 TDI	09.12 -	1055	975	PSS65-15-021-04-22	A, 20, 24, 25, 34, 45, 160, 171			30-60	30-55							T
1.8 TFSI quattro, 1.6 TDI quattro, 2.0 TDI quattro	09.12 -	1090	1025	PSS65-15-021-05-22	A, 24, 25, 34, 45, 160, 170			30-60	30-55							T
S3 quattro	09.12 -	1090	1025	PSS65-15-021-05-22	A, 24, 25, 34, 45, 160, 170			0-30	5-30							T
1.2 TFSI, 1.4 TFSI, 1.8 TFSI, 1.6 TDI, 2.0 TDI	09.12 -	980	980	PSS65-15-021-07-22	A, 24, 25, 35, 45, 160, 170			35-65	35-65							T
1.2 TFSI, 1.4 TFSI, 1.8 TFSI, 1.6 TDI, 2.0 TDI	09.12 -	1060	980	PSS65-15-021-08-22	A, 24, 25, 35, 45, 160, 170			35-65	35-65							T
A4 (8D2, B5)																
Pro-Kit (Performance Fahrwerksfedern | *Performance Springs*)																
1.6, 1.8, 1.8 T	11.94 - 11.00	995	970	E1531-140	A, 18, 20			30	30					F1531001	F1531002	T
1.8 T quattro, 1.8 quattro	01.95 - 11.00	995	1080	E1534-140	A, 18			30	30					F1531001	F1534002	T
1.8, 1.8 T, 1.9 TDI, 2.4, 2.6, 2.8, 2.8 24V	01.95 - 11.00	1055	970	E1532-140	A, 18, 20			30	30					F1532001	F1531002	T
1.8 T quattro, 1.8 quattro, 1.9 TDI quattro, 2.4 quattro, 2.6 quattro, 2.8 quattro	01.95 - 08.01	1055	1080	E1535-140	A, 18			30	30					F1532001	F1534002	T
2.4, 2.5 TDI, 2.6, 2.8, 2.8 24V	01.95 - 11.00	1150	970	E1541-140	A, 18, 20			30	30					F1541001	F1531002	T
2.4 quattro, 2.5 TDI quattro, 2.6 quattro, 2.8 quattro	01.95 - 08.01	1150	1080	E1542-140	A, 18			30	30					F1541001	F1534002	T
Sportline (Performance Fahrwerksfedern Sport | *Sport Performance Springs*)																
1.6, 1.8, 1.8 T, 1.9 TDI, 2.4, 2.6, 2.8, 2.8 24V	11.94 - 11.00	1070	1010	E20-15-003-01-22	A, 18, 20			45-50	35-40					F21-15-003-01-VA	F21-15-003-01-HA	T
Anti-Roll-Kit (Performance Stabilisatoren | *Performance Sway Bars*)																
1.6, 1.8, 1.8 T, 1.9 TDI, 2.4, 2.4 quattro, 2.5 TDI, 2.6, 2.6 quattro, 2.8, 2.8 24V, 2.8 quattro	11.94 - 08.01			E1531-310	A, 18, 20, 22, 45					32		2-fach verstellbar *2-way adjustable*		AS1531310VA		T
1.8 T quattro, 1.8 quattro, 1.9 TDI quattro, 2.5 TDI quattro, 2.7 Bi Turbo quattro, 2.7 Turbo quattro, S4 quattro	01.95 - 09.01			E1531-310	A, 18, 22, 45					32		2-fach verstellbar *2-way adjustable*		AS1531310VA		T
B12 Pro-Kit (Performance Komplettfahrwerke | *Performance Springs+Shocks*)																
1.6, 1.8	11.94 - 01.99	995	970	E90-15-003-01-22	A, 18, 20, 74, 78, 112, 161			30	30					F1531001	F1531002	T
1.6, 1.8	02.99 - CH-Nr.	995	970	E90-15-003-02-22	A, 18, 20, 74, 78, 144, 161			30	30					F1531001	F1531002	T
1.6, 1.8	07.00 - 11.00	995	970	E90-15-003-03-22	A, 18, 20, 78, 140, 161			30	30					F1531001	F1531002	T
1.8, 1.8 T, 1.9 TDI, 2.4, 2.6	11.94 - 01.99	1055	970	E90-15-003-04-22	A, 18, 20, 74, 78, 112, 161			30	30					F1532001	F1531002	T
1.8, 1.8 T, 1.9 TDI, 2.4, 2.6	02.99 - CH-Nr.	1055	970	E90-15-003-05-22	A, 18, 20, 73, 78, 144, 161			30	30					F1532001	F1531002	T
1.8, 1.8 T, 1.9 TDI, 2.4, 2.6	07.00 - 11.00	1055	970	E90-15-003-06-22	A, 18, 20, 78, 140, 161			30	30					F1532001	F1531002	T
1.8 quattro	11.94 - 06.00	995	970	E90-15-003-10-22	A, 18, 78, 110, 161			30	30					F1531001	F1534002	T
1.8 quattro	CH-Nr. - 07.00	995	970	E90-15-003-11-22	A, 18, 78, 140, 161			30	30					F1531001	F1534002	T
1.8 T quattro, 1.8 quattro, 1.9 TDI quattro, 2.4 quattro, 2.6 quattro	11.94 - 06.00	1055	1080	E90-15-003-12-22	A, 18, 78, 110, 161			30	30					F1532001	F1534002	T
1.8 T quattro, 1.8 quattro, 1.9 TDI quattro, 2.4 quattro, 2.6 quattro	07.00 - 11.00	1055	1080	E90-15-003-13-22	A, 18, 78, 140, 161			30	30					F1532001	F1534002	T
1.8 T	02.99 - CH-Nr.	995	970	E90-15-003-02-22	A, 18, 20, 74, 75, 78, 144, 161			30	30					F1531001	F1531002	T
1.8 T	07.00 - 11.00	995	970	E90-15-003-03-22	A, 18, 20, 75, 78, 140, 161			30	30					F1531001	F1531002	T
1.8 T quattro	11.94 - 06.00	995	970	E90-15-003-10-22	A, 18, 75, 78, 110, 161			30	30					F1531001	F1534002	T
1.8 T quattro	CH-Nr. - 07.00	995	970	E90-15-003-11-22	A, 18, 75, 78, 140, 161			30	30					F1531001	F1534002	T
2.4, 2.6, 2.8	01.94 - 01.99	1150	970	E90-15-003-07-22	A, 18, 20, 75, 112, 161			30	30					F1541001	F1531002	T
2.4, 2.6, 2.8	07.00 - 11.00	1150	970	E90-15-003-08-22	A, 18, 20, 78, 144, 161			30	30					F1541001	F1531002	T
2.4, 2.6, 2.8	10.96 - 06.00	1150	970	E90-15-003-09-22	A, 18, 20, 78, 140, 161			30	30					F1541001	F1531002	T

AUDI

Modell *Model*	Baujahr *Year*	Achslast Vorne kg *Front Axle Load kg*	Achslast Hinten kg *Rear Axle Load kg*	Artikel-Nr. *Part-No.*	Hinweise *Notes*	ab Nachtrag ...xx BE *from suppl. ...xx of type approval*	bis Nachtrag ...xx BE *to suppl. ...xx of type approval*	ca. Tieferl. Vorne mm *ca. Lowering Front mm*	ca. Tieferl. Hinten mm *ca. Lowering Rear mm*	Ø Vorne mm *Ø Front mm*	Ø Hinten mm *Ø Rear mm*	Verstellbarkeit Vorne *Adjustable Front*	Verstellbarkeit Hinten *Adjustable Rear*	Ersatzteilbez. Vorne *Spare Part Marking Front*	Ersatzteilbez. Hinten *Spare Part Marking Rear*	Gutachten *Homologation*
A4 (8D2, B5)																
B12 Pro-Kit (Performance Komplettfahrwerke | *Performance Springs+Shocks*)																
2.4 quattro, 2.6 quattro, 2.8 quattro	10.96 - 06.00	1150	1080	E90-15-003-14-22	A, 18, 74, 78, 110, 161			30	30					F1541001	F1534002	T
2.4 quattro, 2.6 quattro, 2.8 quattro	CH-Nr. - 11.00	1150	1080	E90-15-003-15-22	A, 18, 78, 141, 161			30	30					F1541001	F1534002	T
2.8	09.95 - 01.99	1055	970	E90-15-003-04-22	A, 18, 20, 74, 78, 112, 161			30	30					F1532001	F1531002	T
2.8	02.99 - CH-Nr.	1055	970	E90-15-003-05-22	A, 18, 20, 74, 78, 144, 161			30	30					F1532001	F1531002	T
2.8	07.00 - 11.00	1055	970	E90-15-003-06-22	A, 18, 20, 78, 140, 161			30	30					F1532001	F1531002	T
2.8 quattro	11.94 - 06.00	1055	1080	E90-15-003-12-22	A, 18, 78, 110, 161			30	30					F1532001	F1534002	T
2.8 quattro	07.00 - 11.00	1055	1080	E90-15-003-13-22	A, 18, 78, 140, 161			30	30					F1532001	F1534002	T
2.5 TDI	09.97 - 01.99	1150	970	E90-15-003-07-22	A, 18, 20, 78, 112, 161			30	30					F1541001	F1531002	T
2.5 TDI	02.99 - 06.00	1150	970	E90-15-003-08-22	A, 18, 20, 78, 144, 161			30	30					F1541001	F1531002	T
2.5 TDI	07.00 - 11.00	1150	970	E90-15-003-09-22	A, 18, 20, 78, 140, 161			30	30					F1541001	F1531002	T
2.5 TDI quattro	09.97 - 06.00	1150	1080	E90-15-003-14-22	A, 18, 74, 110, 161			30	30					F1541001	F1534002	T
2.5 TDI quattro	CH-Nr. - 11.00	1150	1080	E90-15-003-15-22	A, 18, 78, 141, 161			30	30					F1541001	F1534002	T
B12 Sportline (Performance Komplettfahrwerke Sport | *Sport Performance Springs+Shocks*)																
1.6, 1.8, 1.8 T, 1.9 TDI, 2.4, 2.8	11.94 - 01.99	1070	1010	E95-15-003-01-22	A, 18, 20, 74, 78, 112, 161			45-50	35-40					F21-15-003-01-VA	F21-15-003-01-HA	T
1.6, 1.8, 1.8 T, 1.9 TDI, 2.4, 2.6, 2.8	02.99 - CH-Nr.	1070	1010	E95-15-003-02-22	A, 18, 20, 74, 78, 144, 161			45-50	35-40					F21-15-003-01-VA	F21-15-003-01-HA	T
1.6, 1.8, 1.8 T, 1.9 TDI, 2.4, 2.6, 2.8	07.00 - 11.00	1070	1010	E95-15-003-03-22	A, 18, 20, 78, 140, 161			45-50	35-40					F21-15-003-01-VA	F21-15-003-01-HA	T
Pro-Street-S (Gewindefahrwerke - höhenverstellbar | *Coil-Overs-Adjustable Ride Hight*)																
1.6, 1.8, 1.8 T, 2.4, 2.6, 2.8, 1.9 TDI, 2.5 TDI	11.94 - 01.99	1150	1185	PSS65-15-003-01-22	A, 18, 20, 23, 25, 45, 160			40-75	40-75							T
1.6, 1.8, 1.8 T, 2.4, 2.6, 2.8, 1.9 TDI, 2.5 TDI	01.99 - 11.00	1150	1185	PSS65-15-003-02-22	A, 18, 20, 23, 25, 45, 160			40-75	40-75							T
1.6, 1.8, 1.8 T, 2.4, 2.6, 2.8, 1.9 TDI, 2.5 TDI	11.94 - 01.99	1080	1185	PSS65-15-003-04-22	A, 18, 20, 23, 25, 45, 160			40-75	40-75							T
1.6, 1.8, 1.8 T, 2.4, 2.6, 2.8, 1.9 TDI, 2.5 TDI	01.99 - 11.00	1080	1185	PSS65-15-003-05-22	A, 18, 20, 23, 25, 45, 160			40-75	40-75							T
1.8 quattro, 1.8 T quattro, 2.4 quattro, 2.6 quattro, 2.7 T quattro, 2.8 quattro, 1.9 TDI quattro, 2.5 TDI quattro, 2.7 quattro, S4	11.94 - 11.00	1080	1140	PSS65-15-003-06-22	A, 18, 23, 25, 45, 160			40-75	40-75							T
1.8 quattro, 1.8 T quattro, 2.4 quattro, 2.6 quattro, 2.7 T quattro, 2.8 quattro, 1.9 TDI quattro, 2.5 TDI quattro, 2.7 quattro, S4	11.94 - 11.00	1150	1140	PSS65-15-003-03-22	A, 18, 23, 25, 45, 160			40-75	40-75							T
A4 (8E2, B6)																
Pro-Kit (Performance Fahrwerksfedern | *Performance Springs*)																
1.6, 1.8 T, 2.0, 2.0 FSI	11.00 - 12.04	1090	1035	E10-15-003-01-22	A, 18, 20			30	30					F11-15-003-01-VA	F11-15-003-01-HA	T
1.8 T quattro	11.00 - 12.04	1090	1135	E10-15-003-04-22	A, 18			30	30					F11-15-003-01-VA	F11-15-003-03-HA	T
1.9 TDI, 2.4, 3.0	11.00 - 12.04	1165	1035	E10-15-003-02-22	A, 18, 20			30	30					F1568001	F11-15-003-01-HA	T
1.8 T quattro, 1.9 TDI quattro, 3.0 quattro	11.00 - 12.04	1165	1135	E10-15-003-05-22	A, 18			30	30					F1568001	F11-15-003-03-HA	T
2.5 TDI	08.01 - 12.04	1230	1035	E10-15-003-06-22	A, 18, 20			30	30					F11-15-003-03-VA	F11-15-003-01-HA	T
2.5 TDI quattro	11.00 - 12.04	1230	1135	E10-15-003-03-22	A, 18			30	30					F11-15-003-03-VA	F11-15-003-03-HA	T
Sportline (Performance Fahrwerksfedern Sport | *Sport Performance Springs*)																
1.6, 1.8 T, 1.9 TDI, 2.0, 2.0 FSI	11.00 - 12.04	1090	1035	E20-15-003-02-22	A, 18, 20			45-50	35-40					F21-15-003-02-VA	F21-15-003-02-HA	T
1.9 TDI, 2.4, 3.0	11.00 - 12.04	1140	1035	E20-15-003-03-22	A, 18, 20			45-50	35-40					F21-15-003-03-VA	F21-15-003-02-HA	T
Anti-Roll-Kit (Performance Stabilisatoren | *Performance Sway Bars*)																
1.6, 1.8 T, 1.8 T quattro, 1.9 TDI, 1.9 TDI quattro, 2.0, 2.0 FSI, 2.4, 2.5 TDI, 2.5 TDI quattro, 3.0, 3.0 quattro	11.00 - 12.04			E40-15-003-01-11	A, 18, 22, 45					32	24	nicht verstellbar *not adjustable*	2-fach verstellbar *2-way adjustable*	AS41-15-003-01-VA	AS41-15-003-01-HA	T
B12 Pro-Kit (Performance Komplettfahrwerke | *Performance Springs+Shocks*)																
1.6, 1.8 T, 2.0, 2.0 FSI	11.00 - 09.02	1090	1035	E90-15-006-01-22	A, 18, 20, 78, 113, 161			30	30					F11-15-003-01-VA	F11-15-003-01-HA	T
1.6, 1.8 T, 2.0, 2.0 FSI	10.02 - 12.04	1090	1035	E90-15-006-02-22	A, 18, 20, 78, 145, 161			30	30					F11-15-003-01-VA	F11-15-003-01-HA	T
1.8 T quattro	11.00 - 09.02	1090	1135	E90-15-006-07-22	A, 18, 78, 113, 161			30	30					F11-15-003-01-VA	F11-15-003-03-HA	T
1.8 T quattro	10.02 - 12.04	1090	1135	E90-15-006-08-22	A, 18, 78, 145, 161			30	30					F11-15-003-01-VA	F11-15-003-03-HA	T
1.9 TDI, 2.4, 3.0	11.00 - 09.02	1165	1035	E90-15-006-03-22	A, 18, 20, 78, 113, 161			30	30					F1568001	F11-15-003-01-HA	T
1.9 TDI, 2.4, 3.0	10.02 - 12.04	1165	1035	E90-15-006-04-22	A, 18, 20, 78, 145, 161			30	30					F1568001	F11-15-003-01-HA	T
1.8 T quattro, 2.0 FSI quattro, 3.0 quattro, 3.2 FSI quattro, 1.9 TDI quattro	11.00 - 09.02	1165	1135	E90-15-006-09-22	A, 18, 78, 113, 161			30	30					F1568001	F11-15-003-03-HA	T
1.8 T quattro, 2.0 FSI quattro, 3.0 quattro, 3.2 FSI quattro, 1.9 TDI quattro	10.02 - 12.04	1165	1135	E90-15-006-10-22	A, 18, 78, 145, 161			30	30					F1568001	F11-15-003-03-HA	T
2.5 TDI	08.01 - 09.02	1230	1035	E90-15-006-11-22	A, 18, 20, 78, 113, 161			30	30					F11-15-003-03-VA	F11-15-003-01-HA	T
2.5 TDI	10.02 - 12.04	1230	1035	E90-15-006-12-22	A, 18, 20, 78, 145, 161			30	30					F11-15-003-03-VA	F11-15-003-01-HA	T
2.5 TDI quattro	11.00 - 09.02	1230	1135	E90-15-006-05-22	A, 18, 78, 113, 161			30	30					F11-15-003-03-VA	F11-15-003-03-HA	T
2.5 TDI quattro	10.02 - 12.04	1230	1135	E90-15-006-06-22	A, 18, 78, 145, 161			30	30					F11-15-003-03-VA	F11-15-003-03-HA	T

AUDI

Modell	Baujahr	Achslast Vorne kg	Achslast Hinten kg	Artikel-Nr.	Hinweise	ab Nachtrag ...xx BE	bis Nachtrag ...xx BE	ca. Tieferl. Vorne mm	ca. Tieferl. Hinten mm	Ø Vorne mm	Ø Hinten mm	Verstellbarkeit Vorne	Verstellbarkeit Hinten	Ersatzteilbez. Vorne	Ersatzteilbez. Hinten	Gutachten
Model	*Year*	*Front Axle Load kg*	*Rear Axle Load kg*	*Part-No.*	*Notes*	*from suppl. ...xx of type approval*	*to suppl. ...xx of type approval*	*ca. Lowering Front mm*	*ca. Lowering Rear mm*	*Ø Front mm*	*Ø Rear mm*	*Adjustable Front*	*Adjustable Rear*	*Spare Part Marking Front*	*Spare Part Marking Rear*	*Homologation*
A4 (8E2, B6)																
B12 Sportline (Performance Komplettfahrwerke Sport | *Sport Performance Springs+Shocks*)																
1.6, 1.8 T, 2.0, 2.0 FSI	11.00 - 09.02	1090	1035	E95-15-006-01-22	A, 18, 20, 78, 113, 161			45-50	35-40					F21-15-003-02-VA	F21-15-003-02-HA	T
1.6, 1.8 T, 2.0, 2.0 FSI	10.02 - 12.04	1090	1035	E95-15-006-02-22	A, 18, 20, 78, 145, 161			45-50	35-40					F21-15-003-02-VA	F21-15-003-02-HA	T
1.9 TDI, 2.4, 3.0	11.00 - 09.02	1140	1035	E95-15-006-03-22	A, 18, 20, 78, 113, 161			45-50	35-40					F21-15-003-03-VA	F21-15-003-02-HA	T
1.9 TDI, 2.4, 3.0	10.02 - 12.04	1140	1035	E95-15-006-04-22	A, 18, 20, 78, 145, 161			45-50	35-40					F21-15-003-03-VA	F21-15-003-02-HA	T
Pro-Street-S (Gewindefahrwerke - höhenverstellbar | *Coil-Overs-Adjustable Ride Hight*)																
1.6, 1.8 T, 1.9 TDI, 2.0, 2.0 FSI, 2.4, 2.5 TDI, 3.0	11.00 - 12.04	1080	1150	PSS65-15-006-01-22	A, 18, 20, 23, 25, 45, 160			35-65	35-65							T
1.8 T quattro, 1.9 TDI quattro, 2.5 TDI quattro, 3.0 quattro	11.00 - 12.04	1080	1165	PSS65-15-006-05-22	A, 18, 23, 25, 45, 160			35-65	35-65							T
1.6, 1.8 T, 1.9 TDI, 2.0, 2.0 FSI, 2.4, 2.5 TDI, 3.0	11.00 - 12.04	1220	1150	PSS65-15-006-02-22	A, 18, 20, 23, 25, 45, 160			35-65	35-65							T
1.8 T quattro, 1.9 TDI quattro, 2.5 TDI quattro, 3.0 quattro	11.00 - 12.04	1230	1165	PSS65-15-006-06-22	A, 18, 23, 25, 45, 160			35-65	35-65							T
A4 (8EC, B7)																
Pro-Kit (Performance Fahrwerksfedern | *Performance Springs*)																
1.6, 1.8 T, 2.0, 2.0 TFSI	11.04 - 06.08	1090	1035	E10-15-003-01-22	A, 18, 20			30	30					F11-15-003-01-VA	F11-15-003-01-HA	T
1.8 T quattro, 2.0 TFSI quattro	11.04 - 06.08	1090	1135	E10-15-003-04-22	A, 18			30	30					F11-15-003-01-VA	F11-15-003-03-HA	T
1.9 TDI, 2.0 TDI, 2.0 TDI 16V, 2.0 TFSI, 3.0, 3.2 FSI	11.04 - 06.08	1165	1035	E10-15-003-02-22	A, 18, 20			30	30					F1568001	F11-15-003-01-HA	T
1.8 T quattro, 2.0 TDI quattro, 2.0 TFSI quattro, 3.0 quattro, 3.2 FSI quattro	11.04 - 06.08	1165	1135	E10-15-003-05-22	A, 18			30	30					F1568001	F11-15-003-03-HA	T
2.5 TDI, 2.7 TDI	11.04 - 06.08	1230	1035	E10-15-003-06-22	A, 18, 20			30	30					F11-15-003-03-VA	F11-15-003-01-HA	T
3.0 TDI quattro	11.04 - 06.08	1230	1135	E10-15-003-03-22	A, 18			30	30					F11-15-003-03-VA	F11-15-003-03-HA	T
Sportline (Performance Fahrwerksfedern Sport | *Sport Performance Springs*)																
1.6, 1.8 T, 2.0, 2.0 TFSI	11.04 - 06.08	1090	1035	E20-15-003-02-22	A, 20			45-50	35-40					F21-15-003-02-VA	F21-15-003-02-HA	T
1.9 TDI, 2.0 TDI, 2.0 TDI 16V, 2.0 TFSI, 3.0, 3.2 FSI	11.04 - 06.08	1140	1035	E20-15-003-03-22	A, 20			45-50	35-40					F21-15-003-03-VA	F21-15-003-02-HA	T
Anti-Roll-Kit (Performance Stabilisatoren | *Performance Sway Bars*)																
1.6, 1.8 T, 1.8 T quattro, 1.9 TDI, 2.0, 2.0 TDI, 2.0 TDI 16V, 2.0 TDI quattro, 2.0 TFSI, 2.0 TFSI quattro, 2.5 TDI, 2.7 TDI, 3.0, 3.0 TDI quattro, 3.0 quattro, 3.2 FSI, 3.2 FSI quattro	11.04 - 06.08			E40-15-003-01-11	A, 18, 22, 45					32	24	nicht verstellbar *not adjustable*	2-fach verstellbar *2-way adjustable*	AS41-15-003-01-VA	AS41-15-003-01-HA	T
B12 Pro-Kit (Performance Komplettfahrwerke | *Performance Springs+Shocks*)																
1.6, 1.8 T, 2.0, 2.0 TFSI	11.04 - 06.08	1090	1035	E90-15-006-02-22	A, 18, 20, 78, 161			30	30					F11-15-003-01-VA	F11-15-003-01-HA	T
1.8 T quattro, 2.0 TFSI quattro	11.04 - 06.08	1090	1135	E90-15-006-08-22	A, 18, 78, 161			30	30					F11-15-003-01-VA	F11-15-003-03-HA	T
1.9 TDI, 2.0 TDI, 2.0 TDI 16V, 2.0 TFSI, 3.0, 3.2 FSI	11.04 - 06.08	1165	1035	E90-15-006-04-22	A, 18, 20, 78, 161			30	30					F1568001	F11-15-003-01-HA	T
1.8 T quattro, 2.0 TDI quattro, 2.0 TFSI quattro, 3.0 quattro, 3.2 FSI quattro	11.04 - 06.08	1165	1135	E90-15-006-10-22	A, 18, 78, 161			30	30					F1568001	F11-15-003-03-HA	T
2.5 TDI, 2.7 TDI	11.04 - 06.08	1230	1035	E90-15-006-12-22	A, 18, 20, 78, 161			30	30					F11-15-003-03-VA	F11-15-003-01-HA	T
3.0 TDI quattro	11.04 - 06.08	1230	1135	E90-15-006-06-22	A, 18, 78, 161			30	30					F11-15-003-03-VA	F11-15-003-03-HA	T
B12 Sportline (Performance Komplettfahrwerke Sport | *Sport Performance Springs+Shocks*)																
1.6, 1.8 T, 2.0, 2.0 TFSI	11.04 - 06.08	1090	1035	E95-15-006-02-22	A, 18, 20, 78, 161			45-50	35-40					F21-15-003-02-VA	F21-15-003-02-HA	T
1.9 TDI, 2.0 TDI, 2.0 TFSI, 3.0, 3.2 FSI	11.04 - 06.08	1140	1035	E95-15-006-04-22	A, 18, 20, 78, 161			45-50	35-40					F21-15-003-03-VA	F21-15-003-02-HA	T
Pro-Street-S (Gewindefahrwerke - höhenverstellbar | *Coil-Overs-Adjustable Ride Hight*)																
1.6, 1.8 T, 1.9 TDI, 2.0, 2.0 TDI, 2.0 TDI 16V, 2.0 TFSI, 2.5 TDI, 3.0	11.04 - 06.08	1080	1150	PSS65-15-006-01-22	A, 18, 20, 23, 25, 45, 160			35-65	35-65							T
1.8 T quattro, 2.0 TFSI quattro, 3.0 quattro, 2.0 TDI quattro, 2.5 TDI quattro, 3.0 TDI quattro	11.04 - 06.08	1080	1165	PSS65-15-006-05-22	A, 18, 23, 25, 45, 160			35-65	35-65							T
1.6, 1.8 T, 2.0, 2.0 FSI, 2.0 TFSI, 2.4, 3.0, 3.2 FSI, 1.9 TDI, 2.0 TDI, 2.5 TDI, 2.7 TDI	11.04 - 06.08	1220	1150	PSS65-15-006-02-22	A, 18, 20, 23, 25, 45, 160			35-65	35-65							T
1.8 T quattro, 2.0 TFSI quattro, 3.0 quattro, 2.0 TDI quattro, 2.5 TDI quattro, 3.0 TDI quattro	11.04 - 06.08	1230	1165	PSS65-15-006-06-22	A, 18, 23, 25, 45, 160			35-65	35-65							T
A4 (8K2, B8)																
Pro-Kit (Performance Fahrwerksfedern | *Performance Springs*)																
1.8 TFSI, 2.0 TFSI, 2.0 TFSI flexible fuel, 2.0 TDI, 3.2 FSI	11.07 -	1105	1160	E10-15-011-01-22	A, 12, 18, 20			35	30					F11-15-011-01-VA	F11-15-011-01-HA	ABE
1.8 TFSI quattro, 2.0 TDI quattro, 2.0 TDi quattro, 2.0 TFSI flexible fuel quattro, 2.0 TFSI quattro, 3.2 FSI quattro	11.07 -	1105	1160	E10-15-011-01-22	A, 12, 18			35	35					F11-15-011-01-VA	F11-15-011-01-HA	ABE
2.7 TDI, 3.0 TDI, 3.2 FSI Automatik *2.7 TDI, 3.0 TDI, 3.2 FSI automatic transmission*	11.07 -	1215	1160	E10-15-011-02-22	A, 12, 18, 20			35	30					F11-15-011-02-VA	F11-15-011-01-HA	ABE
3.0 TDI quattro, 3.0 TFSI quattro, 3.2 FSI quattro Automatik *3.0 TDI quattro, 3.0 TFSI quattro, 3.2 FSI quattro automatic transmission*	11.07 -	1215	1160	E10-15-011-02-22	A, 12, 18			35	35					F11-15-011-02-VA	F11-15-011-01-HA	ABE
S4 quattro	11.08 -	1215	1160	E10-15-011-02-22	A, 12, 18			20	15					F11-15-011-02-VA	F11-15-011-01-HA	ABE
Sportline (Performance Fahrwerksfedern Sport | *Sport Performance Springs*)																
1.8 TFSI, 2.0 TDI, 2.0 TFSI, 2.0 TFSI flexible fuel, 3.2 FSI	11.07 -	1105	1155	E20-15-011-01-22	A, 18, 20			45	35					F21-15-011-01-VA	F21-15-011-01-HA	T
1.8 TFSI quattro, 2.0 TDI quattro, 2.0 TDi quattro, 2.0 TFSI flexible fuel quattro, 2.0 TFSI quattro, 3.2 FSI quattro	11.07 -	1105	1155	E20-15-011-01-22	A, 18			45	35					F21-15-011-01-VA	F21-15-011-01-HA	T
Anti-Roll-Kit (Performance Stabilisatoren | *Performance Sway Bars*)																
1.8 TFSI, 1.8 TFSI quattro, 2.0 TDI, 2.0 TDI quattro, 2.0 TDi quattro, 2.0 TFSI, 2.0 TFSI flexible fuel, 2.0 TFSI flexible fuel quattro, 2.0 TFSI quattro, 2.7 TDI, 3.0 TDI, 3.0 TDI quattro, 3.0 TFSI quattro, 3.2 FSI, 3.2 FSI quattro, S4 quattro	11.07 -			E40-15-011-01-11	A, 18, 22, 45					28	23	nicht verstellbar *not adjustable*	nicht verstellbar *not adjustable*	AS41-15-011-01-VA	AS41-15-011-01-HA	T
Pro-Tronic (Elektronische Performance Fahrwerksmodule | *Electronic Performance Suspension Moduls*)																
Alle Motorisierungen / *all motorisation*	11.07 -			AM65-15-011-01-22	A, 175											

Modell	Baujahr	Achslast Vorne kg	Achslast Hinten kg	Artikel-Nr.	Hinweise	ab Nachtrag ...xx BE	bis Nachtrag ...xx BE	ca. Tieferl. Vorne mm	ca. Tieferl. Hinten mm	Ø Vorne mm	Ø Hinten mm	Verstellbarkeit Vorne	Verstellbarkeit Hinten	Ersatzteilbez. Vorne	Ersatzteilbez. Hinten	Gutachten
Model	*Year*	*Front Axle Load kg*	*Rear Axle Load kg*	*Part-No.*	*Notes*	*from suppl. ...xx of type approval*	*to suppl. ...xx of type approval*	*ca. Lowering Front mm*	*ca. Lowering Rear mm*	*Ø Front mm*	*Ø Rear mm*	*Adjustable Front*	*Adjustable Rear*	*Spare Part Marking Front*	*Spare Part Marking Rear*	*Homologation*
A4 (8K2, B8)																
B12 Pro-Kit (Performance Komplettfahrwerke | *Performance Springs+Shocks*)																
1.8 TFSI, 1.8 TFSI quattro, 2.0 TDI, 2.0 TDI quattro, 2.0 TFSI, 2.0 TFSI flexible fuel, 2.0 TFSI fexible fuel quattro, 3.2 FSI, 3.2 FSI quattro	11.07 -	1105	1160	E90-15-011-01-22	A, 12, 18, 21, 78, 88, 161			35	30					F11-15-011-01-VA	F11-15-011-01-HA	ABE
2.7 TDI, 3.0 TDI quattro, 3.0 TFSI quattro, 3.2 FSI, 3.2 FSI quattro	11.07 -	1215	1160	E90-15-011-02-22	A, 12, 18, 21, 78, 88, 161			35	30					F11-15-011-02-VA	F11-15-011-01-HA	ABE
S4 quattro	11.07 -	1215	1160	E90-15-011-02-22	A, 12, 18, 21, 78, 88, 161			20	15					F11-15-011-02-VA	F11-15-011-01-HA	ABE
B12 Sportline (Performance Komplettfahrwerke Sport | *Sport Performance Springs+Shocks*)																
1.8 TFSI, 1.8 TFSI quattro, 2.0 TDI, 2.0 TDI quattro, 2.0 TFSI, 2.0 TFSI flexible fuel, 2.0 TFSI fexible fuel quattro, 3.2 FSI, 3.2 FSI quattro	11.07 -	1105	1155	E95-15-011-01-22	A, 12, 18, 21, 78, 88, 161			45	35					F21-15-011-01-VA	F21-15-011-01-HA	T
Pro-Street-S (Gewindefahrwerke - höhenverstellbar | *Coil-Overs-Adjustable Ride Hight*)																
1.8 TFSI, 2.0 TFSI, 2.0 TFSI flexible fuel, 3.2 FSI, 2.0 TDI, 2.7 TDI, 3.0 TDI	11.07 -	1080	1215	PSS65-15-011-01-22	A, 18, 24, 25, 45, 101, 160			20-40	10-40							T
1.8 TFSI quattro, 2.0 TFSI quattro, 2.0 TFSI quattro flexible fuel, 3.0 TFSI quattro, 3.2 FSI quattro, 2.0 TDI quattro, 3.0 TDI quattro	11.07 -	1080	1215	PSS65-15-011-01-22	A, 18, 24, 25, 45, 101, 160			20-40	10-40							T
1.8 TFSI, 2.0 TFSI, 2.0 TFSI flexible fuel, 3.2 FSI, 2.0 TDI, 2.7 TDI, 3.0 TDI	11.07 -	1180	1215	PSS65-15-011-02-22	A, 18, 24, 25, 45, 101, 160			20-40	10-40							T
1.8 TFSI quattro, 2.0 TFSI quattro, 2.0 TFSI quattro flexible fuel, 3.0 TFSI quattro, 3.2 FSI quattro, 2.0 TDI quattro, 3.0 TDI quattro, S4 quattro	11.07 -	1225	1215	PSS65-15-011-02-22	A, 18, 24, 25, 45, 101, 160			20-40	10-40							T
A4 Avant (8D5, B5)																
Pro-Kit (Performance Fahrwerksfedern | *Performance Springs*)																
1.6, 1.8, 1.8 T	11.94 - 09.01	995	1045	E1536-140	A, 18, 20			30	30					F1531001	F1536002	T
1.8 T quattro, 1.8 quattro	07.95 - 09.01	995	1115	E1538-140	A, 18			30	30					F1531001	F1538002	T
1.8, 1.8 T, 1.9 TDI, 2.4, 2.6, 2.8	07.95 - 09.01	1055	1045	E1537-140	A, 18, 20			30	30					F1532001	F1536002	T
1.8 T quattro, 1.8 quattro, 1.9 TDI quattro, 2.4 quattro, 2.6 quattro, 2.8 quattro	07.95 - 09.01	1055	1115	E1539-140	A, 18			30	30					F1532001	F1538002	T
2.4, 2.5 TDI, 2.6, 2.8	07.95 - 09.01	1150	1045	E1543-140	A, 18, 20			30	30					F1541001	F1536002	T
2.4 quattro, 2.5 TDI quattro, 2.6 quattro, 2.8 quattro	01.96 - 09.01	1150	1115	E1544-140	A, 18			30	30					F1541001	F1538002	T
S4 quattro	09.97 - 09.01	1150	1130	E1569-140	A, 18			20	20					F1568001	F1538002	T
Sportline (Performance Fahrwerksfedern Sport | *Sport Performance Springs*)																
1.6, 1.8, 1.8 T, 1.9 TDI, 2.4, 2.6, 2.8	11.94 - 09.01	1070	1010	E20-15-003-01-22	A, 18, 20			45-50	35-40					F21-15-003-01-VA	F21-15-003-01-HA	T
Anti-Roll-Kit (Performance Stabilisatoren | *Performance Sway Bars*)																
1.6, 1.8, 1.8 T, 1.9 TDI, 2.4, 2.5 TDI, 2.6, 2.8	11.94 - 09.01			E1531-310	A, 18, 20, 22, 45					32		2-fach verstellbar *2-way adjustable*		AS1531310VA		T
1.8 T quattro, 1.8 quattro, 1.9 TDI quattro, 2.4 quattro, 2.5 TDI quattro, 2.6 quattro, 2.8 quattro, S4 quattro	07.95 - 09.01			E1531-310	A, 18, 22, 45					32		2-fach verstellbar *2-way adjustable*		AS1531310VA		T
B12 Pro-Kit (Performance Komplettfahrwerke | *Performance Springs+Shocks*)																
1.6, 1.8	01.96 - 01.99	995	1045	E90-15-003-16-22	A, 18, 20, 74, 78, 112, 161			30	30					F1531001	F1536002	T
1.6, 1.8	02.99 - 06.00	995	1045	E90-15-003-17-22	A, 18, 20, 74, 78, 144, 161			30	30					F1531001	F1536002	T
1.6, 1.8	07.00 - 09.01	995	1045	E90-15-003-18-22	A, 18, 20, 78, 140, 161			30	30					F1531001	F1536002	T
1.8, 1.8 T, 1.9 TDI, 2.4, 2.6	01.96 - 01.99	1055	1045	E90-15-003-19-22	A, 18, 20, 74, 78, 143, 161			30	30					F1532001	F1536002	T
1.8, 1.8 T, 1.9 TDI, 2.4, 2.6	02.99 - 06.00	1055	1045	E90-15-003-20-22	A, 18, 20, 74, 78, 144, 161			30	30					F1532001	F1536002	T
1.8, 1.8 T, 1.9 TDI, 2.4, 2.6	11.94 - 09.01	1150	1045	E90-15-003-21-22	A, 18, 20, 78, 140, 161			30	30					F1532001	F1536002	T
1.8 quattro	03.98 - CH-Nr.	995	1115	E90-15-003-25-22	A, 18, 74, 78, 142, 161			30	30					F1531001	F1538002	T
1.8 quattro	07.00 - 09.01	995	1115	E90-15-003-26-22	A, 18, 78, 140, 161			30	30					F1531001	F1538002	T
1.8 T quattro, 1.8 quattro, 1.9 TDI quattro, 2.4 quattro, 2.6 quattro	03.98 - CH-Nr.	1055	1115	E90-15-003-27-22	A, 18, 74, 78, 142, 161			20	20					F1532001	F1538002	T
1.8 T quattro, 1.8 quattro, 1.9 TDI quattro, 2.4 quattro, 2.6 quattro	02.99 - 06.00	1055	1045	E90-15-003-28-22	A, 18, 78, 140, 161			30	30					F1532001	F1538002	T
1.8 T	02.99 - 06.00	995	1045	E90-15-003-17-22	A, 18, 20, 74, 75, 78, 144, 161			30	30					F1531001	F1536002	T
1.8 T	07.00 - 09.01	995	1045	E90-15-003-18-22	A, 18, 20, 75, 78, 140, 161			30	30					F1531001	F1536002	T
1.8 T quattro	03.98 - CH-Nr.	995	1115	E90-15-003-25-22	A, 18, 74, 75, 78, 142, 161			30	30					F1531001	F1538002	T
1.8 T quattro	07.00 - 09.01	995	1115	E90-15-003-26-22	A, 18, 75, 78, 140, 161			30	30					F1531001	F1538002	T
2.4 quattro, 2.6 quattro, 2.8 quattro	03.98 - CH-Nr.	1150	1115	E90-15-003-29-22	A, 18, 74, 78, 142, 161			30	30					F1541001	F1538002	T
2.4 quattro, 2.6 quattro, 2.8 quattro	07.00 - 09.01	1150	1115	E90-15-003-30-22	A, 18, 78, 140, 161			30	30					F1541001	F1538002	T
S4 quattro	09.97 - 09.01	1150	1130	E90-15-003-31-22	A, 18, 74, 78, 161			20	20					F1568001	F1538002	T
2.8	01.96 - 01.99	1150	1045	E90-15-003-19-22	A, 18, 20, 74, 78, 143, 161			30	30					F1532001	F1536002	T
2.8	02.99 - 06.00	1055	1045	E90-15-003-20-22	A, 18, 20, 74, 78, 144, 161			30	30					F1532001	F1536002	T
2.8	07.00 - 09.01	1150	1045	E90-15-003-21-22	A, 18, 20, 78, 140, 161			30	30					F1532001	F1536002	T
2.4, 2.6, 2.8	01.96 - 01.99	1150	1045	E90-15-003-22-22	A, 18, 20, 74, 78, 143, 161			30	30					F1541001	F1536002	T
2.4, 2.6, 2.8	02.99 - 06.00	1150	1045	E90-15-003-23-22	A, 18, 20, 74, 78, 144, 161			30	30					F1541001	F1536002	T
2.8 quattro	03.98 - CH-Nr.	1055	1115	E90-15-003-27-22	A, 18, 74, 78, 139, 161			30	30					F1532001	F1538002	T
2.8 quattro	07.00 - 09.01	1150	1115	E90-15-003-28-22	A, 18, 74, 78, 140, 161			30	30					F1532001	F1538002	T

AUDI

AUDI

Modell	Baujahr	Achslast Vorne kg	Achslast Hinten kg	Artikel-Nr.	Hinweise	ab Nachtrag ...xx BE	bis Nachtrag ...xx BE	ca. Tieferl. Vorne mm	ca. Tieferl. Hinten mm	Ø Vorne mm	Ø Hinten mm	Verstellbarkeit Vorne	Verstellbarkeit Hinten	Ersatzteilbez. Vorne	Ersatzteilbez. Hinten	Gutachten
Model	*Year*	*Front Axle Load kg*	*Rear Axle Load kg*	*Part-No.*	*Notes*	*from suppl. ...xx of type approval*	*to suppl. ...xx of type approval*	*ca. Lowering Front mm*	*ca. Lowering Rear mm*	*Ø Front mm*	*Ø Rear mm*	*Adjustable Front*	*Adjustable Rear*	*Spare Part Marking Front*	*Spare Part Marking Rear*	*Homologation*
A4 Avant (8D5, B5)																
B12 Pro-Kit (Performance Komplettfahrwerke | *Performance Springs+Shocks*)																
2.5 TDI	01.96 - 01.99	1150	1045	E90-15-003-22-22	A, 18, 20, 74, 78, 143, 161			30	30					F1541001	F1536002	T
2.5 TDI	02.99 - 06.00	1150	1045	E90-15-003-23-22	A, 18, 20, 74, 78, 144, 161			30	30					F1541001	F1536002	T
2.5 TDI	07.00 - 09.01	1150	1045	E90-15-003-24-22	A, 18, 20, 78, 140, 161			30	30					F1541001	F1536002	T
2.5 TDI quattro	03.98 - CH-Nr.	1150	1115	E90-15-003-29-22	A, 18, 74, 78, 142, 161			30	30					F1541001	F1538002	T
2.5 TDI quattro	07.00 - 09.01	1150	1115	E90-15-003-30-22	A, 18, 78, 140, 161			30	30					F1541001	F1538002	T
B12 Sportline (Performance Komplettfahrwerke Sport | *Sport Performance Springs+Shocks*)																
1.6, 1.8, 1.8 T, 1.9 TDI, 2.4, 2.6, 2.8	01.96 - 01.99	1070	1010	E95-15-003-01-22	A, 18, 20, 74, 78, 112, 161			45-50	35-40					F21-15-003-01-VA	F21-15-003-01-HA	T
1.6, 1.8, 1.8 T, 1.9 TDI, 2.4, 2.6, 2.8	02.99 - 06.00	1070	1010	E95-15-003-02-22	A, 18, 20, 74, 78, 144, 161			45-50	35-40					F21-15-003-01-VA	F21-15-003-01-HA	T
1.6, 1.8, 1.8 T, 1.9 TDI, 2.4, 2.6, 2.8	07.00 - 09.01	1070	1010	E95-15-003-03-22	A, 18, 20, 74, 78, 111, 161			45-50	35-40					F21-15-003-01-VA	F21-15-003-01-HA	T
Pro-Street-S (Gewindefahrwerke - höhenverstellbar | *Coil-Overs-Adjustable Ride Hight*)																
1.6, 1.8, 1.8 T, 1.9 TDI, 2.4, 2.5 TDI, 2.6, 2.8	11.94 - 01.99	1150	1185	PSS65-15-003-01-22	A, 18, 20, 23, 25, 45, 160			40-75	40-75							T
1.6, 1.8, 1.8 T, 1.9 TDI, 2.4, 2.5 TDI, 2.6, 2.8	01.99 - 09.01	1150	1185	PSS65-15-003-02-22	A, 18, 20, 23, 25, 45, 160			40-75	40-75							T
1.6, 1.8, 1.8 T, 1.9 TDI, 2.4, 2.5 TDI, 2.6, 2.8	11.94 - 01.99	1080	1185	PSS65-15-003-04-22	A, 18, 20, 23, 25, 45, 160			40-75	40-75							T
1.6, 1.8, 1.8 T, 1.9 TDI, 2.4, 2.5 TDI, 2.6, 2.8	01.99 - 09.01	1080	1185	PSS65-15-003-05-22	A, 18, 20, 23, 25, 45, 160			40-75	40-75							T
1.8 quattro, 1.8 T quattro, 2.4 quattro, 2.6 quattro, 2.7 T quattro, 2.8 quattro, 1.9 TDI quattro, 2.5 TDI quattro, 2.7 quattro, S4	07.95 - 09.01	1080	1140	PSS65-15-003-06-22	A, 18, 23, 25, 45, 160			40-75	40-75							T
1.8 quattro, 1.8 T quattro, 2.4 quattro, 2.6 quattro, 2.7 T quattro, 2.8 quattro, 1.9 TDI quattro, 2.5 TDI quattro, 2.7 quattro, S4	07.95 - 09.01	1150	1140	PSS65-15-003-03-22	A, 18, 23, 25, 45, 160			40-75	40-75							T
A4 Avant (8E5, B6)																
Pro-Kit (Performance Fahrwerksfedern | *Performance Springs*)																
1.6, 1.8 T, 2.0, 2.0 FSI	09.01 - 12.04	1090	1135	E10-15-003-07-22	A, 18, 20			30	30					F11-15-003-01-VA	F11-15-003-03-HA	T
1.8 T quattro	09.01 - 12.04	1090	1150	E10-15-003-11-22	A, 18			30	30					F11-15-003-01-VA	F11-15-003-10-HA	T
1.8 T, 2.0 TFSI, 2.4, 3.0, 3.2 FSI, 1.9 TDI	04.01 - 12.04	1165	1135	E10-15-003-08-22	A, 18, 20			30	30					F1568001	F11-15-003-03-HA	T
1.8 T quattro, 1.9 TDI quattro, 3.0 quattro	04.01 - 12.04	1165	1150	E10-15-003-12-22	A, 18			30	30					F1568001	F11-15-003-10-HA	T
2.5 TDI, 2.5 TDi	10.00 - 12.04	1230	1135	E10-15-003-09-22	A, 18, 20			30	30					F11-15-003-03-VA	F11-15-003-03-HA	T
2.5 TDI quattro	09.01 - 12.04	1230	1150	E10-15-003-10-22	A, 18			30	30					F11-15-003-03-VA	F11-15-003-10-HA	T
Sportline (Performance Fahrwerksfedern Sport | *Sport Performance Springs*)																
1.6, 1.8 T, 2.0, 2.0 FSI	09.01 - 12.04	1090	1135	E20-15-003-04-22	A, 18, 20			45-50	35-40					F21-15-003-02-VA	F21-15-003-04-HA	T
1.8 T, 2.0 TFSI, 2.4, 3.0, 3.2 FSI, 1.9 TDI	04.01 - 12.04	1140	1135	E20-15-003-05-22	A, 18, 20			45-50	35-40					F21-15-003-03-VA	F21-15-003-04-HA	T
Anti-Roll-Kit (Performance Stabilisatoren | *Performance Sway Bars*)																
1.6, 1.8 T, 1.8 T quattro, 1.9 TDI, 1.9 TDI quattro, 2.0, 2.0 FSI, 2.4, 2.5 TDI, 2.5 TDI quattro, 2.5 TDi, 3.0, 3.0 quattro	10.00 - 12.04			E40-15-003-01-11	A, 18, 22, 45					32	24	nicht verstellbar *not adjustable*	2-fach verstellbar *2-way adjustable*	AS41-15-003-01-VA	AS41-15-003-01-HA	T
B12 Pro-Kit (Performance Komplettfahrwerke | *Performance Springs+Shocks*)																
1.6, 1.8 T, 2.0, 2.0 FSI	09.01 - 12.05	1090	1130	E90-15-006-13-22	A, 18, 20, 78, 114, 161			30	30					F11-15-003-01-VA	F11-15-003-03-HA	T
1.8 T, 2.0, 2.0 FSI	09.01 - 12.04	1090	1130	E90-15-006-14-22	A, 18, 20, 78, 146, 161			30	30					F11-15-003-01-VA	F11-15-003-03-HA	T
1.8 T quattro	09.01 - 12.05	1090	1150	E90-15-006-21-22	A, 18, 78, 114, 161			30	30					F11-15-003-01-VA	F11-15-003-10-HA	T
1.8 T quattro	09.01 - 12.04	1090	1150	E90-15-006-22-22	A, 18, 78, 146, 161			30	30					F11-15-003-01-VA	F11-15-003-10-HA	T
1.8 T, 1.9 TDI, 2.4, 3.0	04.01 - 12.05	1165	1130	E90-15-006-15-22	A, 18, 20, 78, 114, 161			30	30					F1568001	F11-15-003-03-HA	T
1.8 T, 1.9 TDI, 2.4, 3.0	Ch-Nr. - 12.04	1165	1130	E90-15-006-16-22	A, 18, 20, 78, 146, 161			30	30					F1568001	F11-15-003-03-HA	T
1.8 T quattro, 1.9 TDI quattro, 3.0 quattro	04.01 - 12.05	1165	1150	E90-15-006-23-22	A, 18, 78, 114, 161			30	30					F1568001	F11-15-003-10-HA	T
1.8 T quattro, 1.9 TDI quattro, 3.0 quattro	04.01 - 12.04	1165	1150	E90-15-006-24-22	A, 18, 78, 146, 161			30	30					F1568001	F11-15-003-10-HA	T
2.5 TDI, 2.5 TDi	10.00 - 12.05	1230	1130	E90-15-006-17-22	A, 18, 20, 78, 114, 161			30	30					F11-15-003-03-VA	F11-15-003-03-HA	T
2.5 TDI, 2.5 TDi	10.00 - 12.04	1230	1130	E90-15-006-18-22	A, 18, 20, 78, 146, 161			30	30					F11-15-003-03-VA	F11-15-003-03-HA	T
2.5 TDI quattro	09.01 - 12.05	1230	1150	E90-15-006-19-22	A, 18, 78, 114, 161			30	30					F11-15-003-03-VA	F11-15-003-10-HA	T
2.5 TDI quattro	09.01 - 12.04	1230	1150	E90-15-006-20-22	A, 18, 78, 146, 161			30	30					F11-15-003-03-VA	F11-15-003-10-HA	T
B12 Sportline (Performance Komplettfahrwerke Sport | *Sport Performance Springs+Shocks*)																
1.6, 1.8 T, 2.0, 2.0 FSI	09.01 - 12.05	1090	1090	E95-15-006-05-22	A, 18, 20, 78, 114, 161			45-50	35-40					F21-15-003-02-VA	F21-15-003-04-HA	T
1.6, 1.8 T, 2.0, 2.0 FSI	09.01 - 12.04	1090	1090	E95-15-006-06-22	A, 18, 20, 78, 146, 161			45-50	35-40					F21-15-003-02-VA	F21-15-003-04-HA	T
1.8 T, 1.9 TDI, 2.4, 3.0	09.01 - 12.05	1140	1090	E95-15-006-07-22	A, 18, 20, 78, 114, 161			45-50	35-40					F21-15-003-03-VA	F21-15-003-04-HA	T
1.8 T, 1.9 TDI, 2.4, 3.0	Ch-Nr. - 12.04	1140	1090	E95-15-006-08-22	A, 18, 20, 78, 146, 161			45-50	35-40					F21-15-003-03-VA	F21-15-003-04-HA	T
Pro-Street-S (Gewindefahrwerke - höhenverstellbar | *Coil-Overs-Adjustable Ride Hight*)																
1.6, 1.8 T, 1.9 TDI, 2.0, 2.0 FSI, 2.4, 2.5 TDI, 2.5 TDi, 3.0	10.00 - 12.04	1080	1150	PSS65-15-006-03-22	A, 18, 20, 23, 25, 45, 160			35-65	35-60							T
1.8 T quattro, 1.9 TDI quattro, 2.5 TDI quattro, 3.0 quattro	04.01 - 12.04	1080	1165	PSS65-15-006-07-22	A, 18, 23, 25, 45, 160			35-65	35-65							T
1.6, 1.8 T, 1.9 TDI, 2.0, 2.0 FSI, 2.4, 2.5 TDI, 2.5 TDi, 3.0	10.00 - 12.04	1230	1150	PSS65-15-006-04-22	A, 18, 20, 23, 25, 45, 160			35-65	35-60							T
1.8 T quattro, 1.9 TDI quattro, 2.5 TDI quattro, 3.0 quattro	04.01 - 12.04	1230	1165	PSS65-15-006-08-22	A, 18, 23, 25, 45, 160			35-65	35-65							T

AUDI

Modell *Model*	Baujahr *Year*	Achslast Vorne kg *Front Axle Load kg*	Achslast Hinten kg *Rear Axle Load kg*	Artikel-Nr. *Part-No.*	Hinweise *Notes*	ab Nachtrag ...xx BE *from suppl. ...xx of type approval*	bis Nachtrag ...xx BE *to suppl. ...xx of type approval*	ca. Tieferl. Vorne mm *ca. Lowering Front mm*	ca. Tieferl. Hinten mm *ca. Lowering Rear mm*	Ø Vorne mm *Ø Front mm*	Ø Hinten mm *Ø Rear mm*	Verstellbarkeit Vorne *Adjustable Front*	Verstellbarkeit Hinten *Adjustable Rear*	Ersatzteilbez. Vorne *Spare Part Marking Front*	Ersatzteilbez. Hinten *Spare Part Marking Rear*	Gutachten *Homologation*
A4 Avant (8ED, B7)																
Pro-Kit (Performance Fahrwerksfedern | *Performance Springs*)																
1.6, 1.8 T, 2.0, 2.0 TFSI	11.04 - 06.08	1090	1135	E10-15-003-07-22	A, 18, 20			30	30					F11-15-003-01-VA	F11-15-003-03-HA	T
1.8 T quattro, 2.0 TFSI quattro	11.04 - 06.08	1090	1150	E10-15-003-11-22	A, 18			30	30					F11-15-003-01-VA	F11-15-003-10-HA	T
1.9 TDI, 2.0 TDI, 2.0 TDI 16V, 2.0 TFSI, 3.0, 3.2 FSI	11.04 - 06.08	1165	1135	E10-15-003-08-22	A, 18, 20			30	30					F1568001	F11-15-003-03-HA	T
1.8 T quattro, 2.0 TDI quattro, 2.0 TFSI quattro, 3.0 quattro, 3.2 FSI quattro	11.04 - 06.08	1165	1150	E10-15-003-12-22	A, 18			30	30					F1568001	F11-15-003-10-HA	T
2.5 TDI, 2.7 TDI, 2.7 TDi	11.04 - 06.08	1230	1135	E10-15-003-09-22	A, 18, 20			30	30					F11-15-003-03-VA	F11-15-003-03-HA	T
3.0 TDI quattro	11.04 - 06.08	1230	1150	E10-15-003-10-22	A, 18			30	30					F11-15-003-03-VA	F11-15-003-10-HA	T
Sportline (Performance Fahrwerksfedern Sport | *Sport Performance Springs*)																
1.6, 1.8 T, 2.0, 2.0 TFSI	11.04 - 06.08	1090	1135	E20-15-003-04-22	A, 20			45-50	35-40					F21-15-003-02-VA	F21-15-003-04-HA	T
1.9 TDI, 2.0 TDI, 2.0 TDI 16V, 2.0 TFSI, 3.0, 3.2 FSI	11.04 - 06.08	1140	1135	E20-15-003-05-22	A, 20			45-50	35-40					F21-15-003-03-VA	F21-15-003-04-HA	T
Anti-Roll-Kit (Performance Stabilisatoren | *Performance Sway Bars*)																
1.6, 1.8 T, 1.8 T quattro, 1.9 TDI, 2.0, 2.0 TDI, 2.0 TDI 16V, 2.0 TDI quattro, 2.0 TFSI, 2.0 TFSI quattro, 2.5 TDI, 2.7 TDI, 2.7 TDi, 3.0, 3.0 TDI quattro, 3.0 quattro, 3.2 FSI, 3.2 FSI quattro	11.04 - 06.08			E40-15-003-01-11	A, 18, 22, 45					32	24	nicht verstellbar *not adjustable*	2-fach verstellbar *2-way adjustable*	AS41-15-003-01-VA	AS41-15-003-01-HA	T
B12 Pro-Kit (Performance Komplettfahrwerke | *Performance Springs+Shocks*)																
1.6, 1.8 T, 2.0, 2.0 TFSI	11.04 - 06.08	1090	1130	E90-15-006-14-22	A, 18, 20, 78, 161			30	30					F11-15-003-01-VA	F11-15-003-03-HA	T
1.8 T quattro, 2.0 TFSI quattro	11.04 - 06.08	1090	1150	E90-15-006-22-22	A, 18, 78, 161			30	30					F11-15-003-01-VA	F11-15-003-10-HA	T
1.9 TDI, 2.0 TDI, 2.0 TDI 16V, 2.0 TFSI, 3.0, 3.2 FSI	11.04 - 06.08	1165	1130	E90-15-006-16-22	A, 18, 20, 78, 161			30	30					F1568001	F11-15-003-03-HA	T
1.8 T quattro, 2.0 TDI quattro, 2.0 TFSI quattro, 3.0 quattro, 3.2 FSI quattro	11.04 - 06.08	1165	1150	E90-15-006-24-22	A, 18, 78, 161			30	30					F1568001	F11-15-003-10-HA	T
2.5 TDI, 2.7 TDI, 2.7 TDi	11.04 - 06.08	1230	1130	E90-15-006-18-22	A, 18, 20, 78, 161			30	30					F11-15-003-03-VA	F11-15-003-03-HA	T
3.0 TDI quattro	11.04 - 06.08	1230	1150	E90-15-006-20-22	A, 18, 78, 161			30	30					F11-15-003-03-VA	F11-15-003-10-HA	T
B12 Sportline (Performance Komplettfahrwerke Sport | *Sport Performance Springs+Shocks*)																
1.6, 1.8 T, 2.0, 2.0 TFSI	11.04 - 06.08	1090	1090	E95-15-006-06-22	A, 18, 20, 78, 161			45-50	35-40					F21-15-003-02-VA	F21-15-003-04-HA	T
1.9 TDI, 2.0 TDI, 2.0 TDI 16V, 2.0 TFSI, 3.0, 3.2 FSI	11.04 - 06.08	1140	1090	E95-15-006-08-22	A, 18, 20, 78, 161			45-50	35-40					F21-15-003-03-VA	F21-15-003-04-HA	T
Pro-Street-S (Gewindefahrwerke - höhenverstellbar | *Coil-Overs-Adjustable Ride Hight*)																
1.6, 1.8 T, 2.0, 2.0 FSI, 2.0 TFSI, 2.4, 3.0, 1.9 TDI, 2.0 TDI, 2.5 TDI, 2.7 TDI	11.04 - 06.08	1080	1150	PSS65-15-006-03-22	A, 18, 20, 23, 25, 45, 160			35-65	35-60							T
1.8 T quattro, 2.0 TFSI quattro, 3.0 quattro, 3.2 FSI quattro, 2.0 TDI quattro, 3.0 TDI quattro	11.04 - 06.08	1080	1165	PSS65-15-006-07-22	A, 18, 23, 25, 45, 160			35-65	35-65							T
1.6, 1.8 T, 2.0, 2.0 FSI, 2.0 TFSI, 2.4, 3.0, 1.9 TDI, 2.0 TDI, 2.5 TDI, 2.7 TDI	11.04 - 06.08	1230	1150	PSS65-15-006-04-22	A, 18, 20, 23, 25, 45, 160			35-65	35-60							T
1.8 T quattro, 2.0 TFSI quattro, 3.0 quattro, 3.2 FSI quattro, 2.0 TDI quattro, 3.0 TDI quattro	11.04 - 06.08	1230	1165	PSS65-15-006-08-22	A, 18, 23, 25, 45, 160			35-65	35-65							T
A4 Avant (8K5, B8)																
Pro-Kit (Performance Fahrwerksfedern | *Performance Springs*)																
1.8 TFSI, 2.0 TDI, 2.0 TFSI, 2.0 TFSI flexible fuel, 3.2 FSI Schaltgetriebe *1.8 TFSI, 2.0 TDI, 2.0 TFSI, 2.0 TFSI flexible fuel, 3.2 FSI manual transmission*	11.07 -	1105	1160	E10-15-011-01-22	A, 12, 18, 20			35	30					F11-15-011-01-VA	F11-15-011-01-HA	ABE
1.8 TFSI quattro, 2.0 TDI quattro, 2.0 TFSI flexible fuel quattro, 2.0 TFSI quattro, 3.2 FSI quattro Automatik *1.8 TFSI quattro, 2.0 TDI quattro, 2.0 TFSI flexible fuel quattro, 2.0 TFSI quattro, 3.2 FSI quattro automatic transmission*	04.08 -	1105	1240	E10-15-011-03-22	A, 12, 18			30	30					F11-15-011-01-VA	F11-15-011-03-HA	ABE
2.7 TDI, 3.0 TDI, 3.2 FSI Automatik *2.7 TDI, 3.0 TDI, 3.2 FSI automatic transmission*	04.08 -	1215	1160	E10-15-011-02-22	A, 12, 18, 20			35	30					F11-15-011-02-VA	F11-15-011-01-HA	ABE
3.0 TDI quattro, 3.0 TFSI quattro, 3.2 FSI quattro	04.08 -	1215	1240	E10-15-011-04-22	A, 12, 18			30	30					F11-15-011-02-VA	F11-15-011-03-HA	ABE
S4 quattro	11.08 -	1215	1240	E10-15-011-04-22	A, 12, 18			20	15					F11-15-011-02-VA	F11-15-011-03-HA	ABE
Sportline (Performance Fahrwerksfedern Sport | *Sport Performance Springs*)																
1.8 TFSI, 2.0 TDI, 2.0 TFSI, 2.0 TFSI flexible fuel, 3.2 FSI	11.07 -	1105	1155	E20-15-011-01-22	A, 18, 20			45	35					F21-15-011-01-VA	F21-15-011-01-HA	T
Anti-Roll-Kit (Performance Stabilisatoren | *Performance Sway Bars*)																
1.8 TFSI, 1.8 TFSI quattro, 2.0 TDI, 2.0 TDI quattro, 2.0 TFSI, 2.0 TFSI flexible fuel, 2.0 TFSI flexible fuel quattro, 2.0 TFSI quattro, 2.7 TDI, 3.0 TDI, 3.0 TDI quattro, 3.0 TFSI quattro, 3.2 FSI, 3.2 FSI quattro, S4 quattro	11.07 -			E40-15-011-01-11	A, 18, 22, 45					28	23	nicht verstellbar *not adjustable*	nicht verstellbar *not adjustable*	AS41-15-011-01-VA	AS41-15-011-01-HA	T
Pro-Tronic (Elektronische Performance Fahrwerksmodule | *Electronic Performance Suspension Moduls*)																
Alle Motorisierungen / *all motorisation*	04.08 -			AM65-15-011-01-22	A, 175											
B12 Pro-Kit (Performance Komplettfahrwerke | *Performance Springs+Shocks*)																
1.8 TFSI	04.08 -	1105	1160	E90-15-011-01-22	A, 12, 18, 20, 21, 78, 161			35	30					F11-15-011-01-VA	F11-15-011-01-HA	ABE
1.8 TFSI, 2.0 TDI, 2.0 TFSI, 2.0 TFSI flexible fuel	11.07 -	1105	1160	E90-15-011-01-22	A, 12, 18, 20, 21, 78, 88, 161			35	30					F11-15-011-01-VA	F11-15-011-01-HA	ABE
1.8 TFSI quattro, 2.0 TDI quattro, 2.0 TFSI flexible fuel quattro, 2.0 TFSI quattro, 3.0 TFSI quattro, 3.2 FSI quattro	04.08 -	1105	1225	E90-15-011-03-22	A, 12, 18, 21, 78, 88, 161			30	30					F11-15-011-01-VA	F11-15-011-03-HA	ABE
2.7 TDI, 3.0 TDI, 3.2 FSI	04.08 -	1215	1160	E90-15-011-02-22	A, 12, 18, 20, 21, 78, 88, 161			35	30					F11-15-011-02-VA	F11-15-011-01-HA	ABE
3.0 TFSI quattro, 3.2 FSI quattro mit tiptronic, 3.0 TDI quattro	04.08 -	1215	1225	E90-15-011-04-22	A, 12, 18, 21, 78, 88, 161			30	30					F11-15-011-02-VA	F11-15-011-03-HA	ABE
S4 quattro	04.08 -	1215	1225	E90-15-011-04-22	A, 12, 18, 21, 78, 88, 161			20	15					F11-15-011-02-VA	F11-15-011-03-HA	ABE
B12 Sportline (Performance Komplettfahrwerke Sport | *Sport Performance Springs+Shocks*)																
1.8 TFSI, 2.0 TDI, 2.0 TFSI, 2.0 TFSI flexible fuel	11.07 -	1105	1155	E95-15-011-01-22	A, 12, 18, 20, 21, 78, 161			45	35					F21-15-011-01-VA	F21-15-011-01-HA	T
2.0 TDI, 2.0 TFSI	05.13 -	1105	1155	E95-15-011-01-22	A, 12, 18, 20, 21, 78, 88, 161			45	35					F21-15-011-01-VA	F21-15-011-01-HA	T

AUDI

Modell *Model*	Baujahr *Year*	Achslast Vorne kg *Front Axle Load kg*	Achslast Hinten kg *Rear Axle Load kg*	Artikel-Nr. *Part-No.*	Hinweise *Notes*	ab Nachtrag ...xx BE *from suppl. ...xx of type approval*	bis Nachtrag ...xx BE *to suppl. ...xx of type approval*	ca. Tieferl. Vorne mm *ca. Lowering Front mm*	ca. Tieferl. Hinten mm *ca. Lowering Rear mm*	Ø Vorne mm *Ø Front mm*	Ø Hinten mm *Ø Rear mm*	Verstellbarkeit Vorne *Adjustable Front*	Verstellbarkeit Hinten *Adjustable Rear*	Ersatzteilbez. Vorne *Spare Part Marking Front*	Ersatzteilbez. Hinten *Spare Part Marking Rear*	Gutachten *Homologation*
A4 Avant (8K5, B8)																
Pro-Street-S (Gewindefahrwerke - höhenverstellbar | *Coil-Overs-Adjustable Ride Hight*)																
1.8 TFSI, 2.0 TFSI, 2.0 TFSI flexible fuel, 3.2 FSI, 2.0 TDI, 2.7 TDI, 3.0 TDI	04.08 -	1080	1215	PSS65-15-011-03-22	A, 18, 24, 25, 45, 101, 160			20-40	10-40							T
1.8 TFSI quattro, 2.0 TFSI quattro, 2.0 TFSI flexible fuel quattro, 3.0 TFSI quattro, 3.2 FSI quattro, 2.0 TDI quattro, 3.0 TDI quattro	04.08 -	1080	1215	PSS65-15-011-03-22	A, 18, 24, 25, 45, 101, 160			20-40	10-40							T
1.8 TFSI, 2.0 TFSI, 2.0 TFSI flexible fuel, 3.2 FSI, 2.0 TDI, 2.7 TDI, 3.0 TDI	04.08 -	1180	1215	PSS65-15-011-04-22	A, 18, 24, 25, 45, 101, 160			20-40	10-40							T
1.8 TFSI quattro, 2.0 TFSI quattro, 2.0 TFSI flexible fuel quattro, 3.0 TFSI quattro, 3.2 FSI quattro, 2.0 TDI quattro, 3.0 TDI quattro, S4 quattro	04.08 -	1215	1225	PSS65-15-011-04-22	A, 18, 24, 25, 45, 101, 160			20-40	10-40							T
A4 Cabriolet (8H7, B6, 8HE, B7) ***A4 Convertible (8H7, B6, 8HE, B7)***																
Pro-Kit (Performance Fahrwerksfedern | *Performance Springs*)																
1.8, 1.8 T, 2.0, 2.0 TDI, 2.0 TFSI 16V	07.02 - 03.09	1150	1100	E10-15-003-14-22	A, 18, 20			20	20					F11-15-003-01-VA	F11-15-003-10-HA	T
2.4, 2.5 TDI, 2.7 TDI, 3.0, 3.2 FSI	04.02 - 03.09	1230	1100	E10-15-003-13-22	A, 18, 20			20	20					F1568001	F11-15-003-10-HA	T
Anti-Roll-Kit (Performance Stabilisatoren | *Performance Sway Bars*)																
1.8, 1.8 T, 1.8 T quattro, 2.0, 2.0 TDI, 2.0 TFSI 16V, 2.0 TFSi quattro, 2.4, 2.5 TDI, 2.7 TDI, 3.0, 3.0 quattro, 3.2 FSI, 3.2 FSI quattro	04.02 - 03.09			E40-15-003-01-11	A, 18, 22, 45					32	24	nicht verstellbar *not adjustable*	2-fach verstellbar *2-way adjustable*	AS41-15-003-01-VA	AS41-15-003-01-HA	T
B12 Pro-Kit (Performance Komplettfahrwerke | *Performance Springs+Shocks*)																
1.8, 1.8 T, 2.0, 2.0 TFSI 16V	07.02 - 12.06	1150	1100	E90-15-006-28-22	A, 18, 20, 78, 115, 161			20	20					F11-15-003-01-VA	F11-15-003-10-HA	T
1.8 T, 2.0 TDI, 2.0 TFSI 16V	01.07 - 03.09	1150	1100	E90-15-006-26-22	A, 18, 20, 78, 147, 161			20	20					F11-15-003-01-VA	F11-15-003-10-HA	T
2.4, 2.5 TDI, 2.7 TDI, 3.0, 3.2 FSI	04.02 - 12.06	1230	1100	E90-15-006-27-22	A, 18, 20, 78, 115, 161			20	20					F1568001	F11-15-003-10-HA	T
2.7 TDI, 3.2 FSI	01.07 - 03.09	1230	1100	E90-15-006-25-22	A, 18, 20, 78, 147, 161			20	20					F1568001	F11-15-003-10-HA	T
Pro-Street-S (Gewindefahrwerke - höhenverstellbar | *Coil-Overs-Adjustable Ride Hight*)																
1.8, 1.8 T, 2.0, 2.4, 3.0, 2.0 TDI, 2.5 TDI	04.02 - 03.09	1080	1150	PSS65-15-006-03-22	A, 18, 20, 23, 25, 45, 160			35-65	35-60							T
1.8 T quattro, 2.0 TFSI quattro, 3.0 quattro, 3.0 FSI quattro, 3.0 TDI quattro, S4 quattro	05.03 - 03.09	1080	1165	PSS65-15-006-07-22	A, 18, 23, 25, 45, 160			35-65	35-65							T
1.8, 1.8 T, 2.0, 2.4, 3.0, 3.2 FSI, 2.0 TDI, 2.5 TDI, 2.7 TDI	04.02 - 03.09	1230	1150	PSS65-15-006-04-22	A, 18, 20, 23, 25, 45, 160			35-65	35-60							T
1.8 T quattro, 2.0 TFSI quattro, 3.0 quattro, 3.0 FSI quattro, 3.0 TDI quattro, S4 quattro	05.03 - 03.09	1230	1165	PSS65-15-006-08-22	A, 18, 23, 25, 45, 160			35-65	35-65							T
A5 (8T3)																
Pro-Kit (Performance Fahrwerksfedern | *Performance Springs*)																
1.8 TFSI, 2.0 TDI, 2.0 TDI quattro, 2.0 TFSI, 2.0 TFSI quattro, 3.2 FSI	06.07 -	1120	1120	E10-15-010-02-22	A, 18			20-25	15-20					F11-15-011-01-VA	F11-15-010-01-HA	T
3.0 TFSI quattro, 3.2 FSI quattro	06.07 -	1120	1120	E10-15-010-02-22	A, 18			20-25	20					F11-15-011-01-VA	F11-15-010-01-HA	T
2.7 TDI, 3.0 TDI, 3.0 TDI quattro, 3.0 TFSI quattro, 3.2 FSI quattro, S5 quattro	06.07 -	1205	1120	E10-15-010-01-22	A, 18			25	20					F11-15-010-01-VA	F11-15-010-01-HA	T
3.2 FSI	06.07 -	1205	1120	E10-15-010-01-22	A, 18			25	15-20					F11-15-010-01-VA	F11-15-010-01-HA	T
Anti-Roll-Kit (Performance Stabilisatoren | *Performance Sway Bars*)																
1.8 TFSI, 2.0 TFSI, 2.0 TDI, 2.7 TDI, 3.0 TDI, 3.2 FSI, S5 quattro	09.07 -			E40-15-011-01-11	A, 18, 22, 45, 180					28	23	nicht verstellbar *not adjustable*	nicht verstellbar *not adjustable*	AS41-15-011-01-VA	AS41-15-011-01-HA	T
Pro-Tronic (Elektronische Performance Fahrwerksmodule | *Electronic Performance Suspension Moduls*)																
Alle Motorisierungen / *all motorisation*	06.07 -			AM65-15-011-01-22	A, 175											
B12 Pro-Kit (Performance Komplettfahrwerke | *Performance Springs+Shocks*)																
1.8 TFSI, 2.0 TDI, 2.0 TDI quattro, 2.0 TFSI, 2.0 TFSI quattro, 3.2 FSI	06.07 -	1120	1095	E90-15-010-02-22	A, 18, 21, 78, 161			20-25	15-20					F11-15-011-01-VA	F11-15-010-01-HA	T
2.7 TDI, 3.0 TDI, 3.0 TDI quattro, 3.0 TFSI quattro, 3.2 FSI quattro, RS 5 quattro, S5 quattro	06.07 -	1205	1095	E90-15-010-01-22	A, 18, 21, 78, 161			25	20					F11-15-010-01-VA	F11-15-010-01-HA	T
Pro-Street-S (Gewindefahrwerke - höhenverstellbar | *Coil-Overs-Adjustable Ride Hight*)																
1.8 TFSI, 2.0 TDI, 2.0 TFSI, 2.7 TDI, 3.0 TDI, 3.2 FSI	06.07 -	1080	1240	PSS65-15-011-01-22	A, 18, 24, 25, 45, 101, 160			25-55	25-55							T
2.0 TFSI quattro, 3.0 TFSI quattro, 3.2 FSI quattro, 2.0 TDI quattro, 3.0 TDI, 3.0 TDI quattro, S5 quattro	06.07 -	1245	1240	PSS65-15-011-02-22	A, 18, 24, 25, 45, 101, 160			25-55	25-55							T
A5 Cabriolet (8F7) ***A5 Convertible (8F7)***																
Pro-Kit (Performance Fahrwerksfedern | *Performance Springs*)																
1.8 TFSI, 2.0 TFSI, 3.2 FSI, 2.0 TDI, 2.7 TDI, 3.0 TDI	03.09 -	1120	1240	E10-15-010-03-22	A, 18			20-25	15					F11-15-011-01-VA	F11-15-010-05-HA	T
2.0 TDI, 2.7 TDI, 3.0 TDI, 3.2 FSI	03.09 -	1205	1240	E10-15-010-04-22	A, 18, 20			20-25	15					F11-15-010-01-VA	F11-15-010-05-HA	T
2.0 TDI quattro, 3.2 FSI quattro	03.09 -	1205	1240	E10-15-010-05-22	A, 18			20-25	20					F11-15-010-01-VA	F11-15-010-05-HA	T
2.0 TFSI quattro	03.09 -	1205	1240	E10-15-010-05-22	A, 18			20-25	15					F11-15-010-01-VA	F11-15-010-05-HA	T
3.0 TDI quattro, 3.0 TFSI quattro, S5 quattro	03.09 -	1245	1240	E10-15-010-06-22	A, 18			25	15					F11-15-010-06-VA	F11-15-010-05-HA	T
Anti-Roll-Kit (Performance Stabilisatoren | *Performance Sway Bars*)																
1.8 TFSI, 2.0 TDI, 2.0 TDI quattro, 2.0 TFSI, 2.0 TFSI quattro, 2.7 TDI, 3.0 TDI, 3.0 TDI quattro, 3.0 TFSI quattro, 3.2 FSI, 3.2 FSI quattro, S5 quattro	03.09 -			E40-15-011-01-11	A, 18, 22, 45					28	23	nicht verstellbar *not adjustable*	nicht verstellbar *not adjustable*	AS41-15-011-01-VA	AS41-15-011-01-HA	T
Pro-Tronic (Elektronische Performance Fahrwerksmodule | *Electronic Performance Suspension Moduls*)																
Alle Motorisierungen / *all motorisation*	03.09 -			AM65-15-011-01-22	A, 175											
B12 Pro-Kit (Performance Komplettfahrwerke | *Performance Springs+Shocks*)																
1.8 TFSI, 2.0 TDI, 2.0 TFSI	03.09 -	1120	1240	E90-15-010-03-22	A, 18, 20, 21, 78, 161			20-25	15					F11-15-011-01-VA	F11-15-010-05-HA	T
2.0 TDI, 2.0 TFSI	05.13 -	1120	1240	E90-15-010-03-22	A, 18, 21, 78, 161			20-25	15					F11-15-011-01-VA	F11-15-010-05-HA	T
2.7 TDI, 3.0 TDI, 3.2 FSI	03.09 -	1205	1240	E90-15-010-04-22	A, 18, 20, 21, 78, 161			20-25	15					F11-15-010-01-VA	F11-15-010-05-HA	T
2.0 TFSI quattro, 3.0 TFSI quattro, 3.2 FSI quattro	03.09 -	1205	1240	E90-15-010-05-22	A, 18, 21, 78, 161			20-25	20					F11-15-010-01-VA	F11-15-010-05-HA	T
3.0 TDI quattro, S5 quattro	03.09 -	1245	1240	E90-15-010-06-22	A, 18, 21, 78, 161			25	15					F11-15-010-01-VA	F11-15-010-05-HA	T

AUDI

Modell *Model*	Baujahr *Year*	Achslast Vorne kg *Front Axle Load kg*	Achslast Hinten kg *Rear Axle Load kg*	Artikel-Nr. *Part-No.*	Hinweise *Notes*	ab Nachtrag ...xx BE *from suppl. ...xx of type approval*	bis Nachtrag ...xx BE *to suppl. ...xx of type approval*	ca. Tieferl. Vorne mm *ca. Lowering Front mm*	ca. Tieferl. Hinten mm *ca. Lowering Rear mm*	Ø Vorne mm *Ø Front mm*	Ø Hinten mm *Ø Rear mm*	Verstellbarkeit Vorne *Adjustable Front*	Verstellbarkeit Hinten *Adjustable Rear*	Ersatzteilbez. Vorne *Spare Part Marking Front*	Ersatzteilbez. Hinten *Spare Part Marking Rear*	Gutachten *Homologation*
A5 Cabriolet (8F7) ***A5 Convertible (8F7)***																
Pro-Street-S (Gewindefahrwerke - höhenverstellbar | *Coil-Overs-Adjustable Ride Hight*)																
1.8 TFSI, 2.0 TFSI, 3.2 FSI, 2.0 TDI, 2.7 TDI, 3.0 TDI	03.09 -	1080	1240	PSS65-15-011-01-22	A, 18, 24, 25, 45, 101, 160			25-55	25-55							T
2.0 TFSI quattro, 3.2 FSI quattro, 2.0 TDI quattro, 3.0 TDI quattro, S5 quattro	03.09 -	1245	1240	PSS65-15-011-02-22	A, 18, 24, 25, 45, 101, 160			25-55	25-55							T
A5 Sportback (8TA)																
Pro-Kit (Performance Fahrwerksfedern | *Performance Springs*)																
1.8 TFSI, 2.0 TDI, 2.0 TDI quattro, 2.0 TFSI, 2.0 TFSI quattro	09.09 -	1120	1200	E10-15-010-07-22	A, 18			25	25					F11-15-011-01-VA	F11-15-011-01-HA	T
2.7 TDI, 3.0 TDI, 3.0 TDI quattro, 3.0 TFSI quattro, 3.2 FSI quattro, S5 quattro	09.09 -	1205	1200	E10-15-010-08-22	A, 18			25	25					F11-15-010-01-VA	F11-15-011-01-HA	T
Anti-Roll-Kit (Performance Stabilisatoren | *Performance Sway Bars*)																
1.8 TFSI, 2.0 TDI, 2.0 TDI quattro, 2.0 TFSI, 2.0 TFSI quattro, 2.7 TDI, 3.0 TDI, 3.0 TDI quattro, 3.0 TFSI quattro, 3.2 FSI quattro, S5 quattro	09.09 -			E40-15-011-01-11	A, 18, 22, 45					28	23	nicht verstellbar *not adjustable*	nicht verstellbar *not adjustable*	AS41-15-011-01-VA	AS41-15-011-01-HA	T
Pro-Tronic (Elektronische Performance Fahrwerksmodule | *Electronic Performance Suspension Moduls*)																
Alle Motorisierungen / *all motorisation*	09.09 -			AM65-15-011-01-22	A, 175											
B12 Pro-Kit (Performance Komplettfahrwerke | *Performance Springs+Shocks*)																
1.8 TFSI, 2.0 TDI, 2.0 TDI quattro, 2.0 TFSI, 2.0 TFSI quattro	09.09 -	1120	1155	E90-15-010-07-22	A, 18, 21, 78, 161			25	25					F11-15-011-01-VA	F11-15-011-01-HA	T
2.7 TDI, 3.0 TDI, 3.0 TDI quattro, 3.0 TFSI quattro, 3.2 FSI quattro, S5 quattro	09.09 -	1205	1155	E90-15-010-08-22	A, 18, 21, 78, 161			25	25					F11-15-010-01-VA	F11-15-011-01-HA	T
Pro-Street-S (Gewindefahrwerke - höhenverstellbar | *Coil-Overs-Adjustable Ride Hight*)																
1.8 TFSI, 2.0 TFSI, 3.2 FSI, 2.0 TDI, 2.7 TDI, 3.0 TDI	09.09 -	1080	1240	PSS65-15-011-01-22	A, 18, 24, 25, 45, 101, 160			25-55	25-55							T
2.0 TFSI quattro, 3.2 FSI quattro, 2.0 TDI quattro, 3.0 TDI quattro, S5 quattro	09.09 -	1245	1240	PSS65-15-011-02-22	A, 18, 24, 25, 45, 101, 160			25-55	25-55							T
A6 (4A, C4)																
Pro-Kit (Performance Fahrwerksfedern | *Performance Springs*)																
2.3, 2.4, 2.5 TDI, 2.6, 2.8	06.94 - 10.97	1160	1080	E1515-140	A, 15, 18, 20			35	30					F1515001	F1515002	T
2.3 Automatik, 2.4 Automatik, 2.5 TDI Automatik, 2.6 Automatik, 2.8 Automatik *2.3 automatic transmission, 2.4 automatic transmission, 2.5 TDI automatic transmission, 2.6 automatic transmission, 2.8 automatic transmission*	06.94 - 10.97	1160	1080	E1527-140	A, 18, 20			35	30					F1527001	F1515002	T
2.3 quattro, 2.5 TDI quattro, 2.6 quattro, 2.8 quattro	06.94 - 10.97	1240	1200	E1516-140	A, 15, 18			35	30					F1515001	F1516002	T
2.3 quattro Automatik, 2.5 TDI quattro Automatik, 2.6 quattro Automatik, 2.8 quattro Automatik, S6 4.2 quattro, S6 Plus quattro, S6 Turbo quattro *2.3 quattro automatic transmission, 2.5 TDI quattro automatic transmission, 2.6 quattro automatic transmission, 2.8 quattro automatic transmission, S6 4.2 quattro, S6 Plus quattro, S6 Turbo quattro*	06.94 - 10.97	1240	1200	E1528-140	A, 18			35	30					F1527001	F1516002	T
B12 Pro-Kit (Performance Komplettfahrwerke | *Performance Springs+Shocks*)																
2.3 Automatik, 2.4 Automatik, 2.5 TDI Automatik, 2.6 Automatik, 2.8 Automatik *2.3 automatic transmission, 2.4 automatic transmission, 2.5 TDI automatic transmission, 2.6 automatic transmission, 2.8 automatic transmission*	06.94 - 10.97	1160	1080	E90-15-012-05-22	A, 18, 20, 78, 161			35	30					F1527001	F1515002	T
2.3, 2.5 TDI, 2.6, 2.8	06.94 - 10.97	1160	1080	E90-15-012-01-22	A, 15, 18, 20, 78, 161			35	30					F1515001	F1516002	T
2.3 quattro Automatik, 2.5 TDI quattro Automatik, 2.6 quattro Automatik, 2.8 quattro Automatik, S6 4.2 quattro, S6 Plus quattro, S6 Turbo quattro *2.3 quattro automatic transmission, 2.5 TDI quattro automatic transmission, 2.6 quattro automatic transmission, 2.8 quattro automatic transmission, S6 4.2 quattro, S6 Plus quattro, S6 Turbo quattro*	06.94 - 10.97	1240	1200	E90-15-012-06-22	A, 18, 78, 161			35	30					F1527001	F1516002	T
2.3 quattro, 2.5 TDI quattro, 2.6 quattro, 2.8 quattro	06.94 - 10.97	1240	1200	E90-15-012-02-22	A, 15, 18, 76, 78, 161			35	30					F1515001	F1516002	T
A6 (4B, C5)																
Pro-Kit (Performance Fahrwerksfedern | *Performance Springs*)																
1.8, 1.8 T, 1.9 TDI, 2.0	01.97 - 01.05	1150	1090	E1558-140	A, 15, 18, 20			30	30					F1541001	F1558002	T
1.8 T quattro	02.97 - 01.05	1150	1175	E1561-140	A, 18			30	30					F1541001	F1561002	T
2.4, 2.5 TDI, 2.7, 2.7 T, 2.8, 2.8 24V, 3.0, 3.7	02.97 - 01.05	1230	1090	E1559-140	A, 15, 18, 20			30	30					F1558001	F1558002	T
2.4 quattro, 2.5 TDI quattro, 2.7 T quattro, 2.7 quattro, 2.8 quattro, 3.0 quattro	02.97 - 01.05	1230	1175	E1562-140	A, 18			30	30					F1558001	F1561002	T
B12 Pro-Kit (Performance Komplettfahrwerke | *Performance Springs+Shocks*)																
1.8, 1.8 T, 1.9 TDI	01.97 - 12.00	1150	1090	E90-15-005-01-22	A, 18, 20, 74, 78, 108, 161			30	30					F1541001	F1558002	T
1.8, 1.8 T, 1.9 TDI	01.01 - 01.05	1150	1090	E90-15-005-02-22	A, 18, 20, 74, 78, 134, 161			30	30					F1541001	F1558002	T
2.4, 2.5 TDI, 2.7 T, 2.8	02.97 - 12.00	1230	1090	E90-15-005-03-22	A, 18, 20, 74, 78, 108, 161			30	30					F1558001	F1558002	T
2.4, 2.5 TDI, 2.7, 2.7 T, 2.8, 3.0, 3.7	01.01 - 01.05	1230	1090	E90-15-005-04-22	A, 18, 20, 74, 78, 134, 161			30	30					F1558001	F1558002	T
1.8 T quattro	12.98 - 12.00	1150	1175	E90-15-005-05-22	A, 18, 74, 78, 134, 161			30	30					F1541001	F1561002	T
1.8 T quattro	01.01 - 01.05	1150	1175	E90-15-005-06-22	A, 18, 74, 78, 135, 161			30	30					F1541001	F1561002	T
2.4 quattro, 2.5 TDI quattro, 2.7 T quattro, 2.8 quattro	12.98 - 12.00	1230	1175	E90-15-005-07-22	A, 18, 74, 78, 136, 161			30	30					F1558001	F1561002	T
2.4 quattro, 2.5 TDI quattro, 2.7 T quattro, 2.7 quattro, 2.8 quattro, 3.0 quattro	01.01 - 01.05	1230	1175	E90-15-005-08-22	A, 18, 74, 78, 134, 161			30	30					F1558001	F1561002	T
Pro-Street-S (Gewindefahrwerke - höhenverstellbar | *Coil-Overs-Adjustable Ride Hight*)																
1.8, 1.8 T, 1.9 TDI, 2.0, 2.4, 2.5 TDI, 2.7, 2.7 T, 2.8, 2.8 24V, 3.0, 3.7	01.97 - 01.05	1100	1185	PSS65-15-005-01-22	A, 18, 20, 23, 25, 45, 160			40-75	40-75							T
1.8 T quattro, 2.4 quattro, 2.5 TDI quattro, 2.7 T quattro, 2.7 quattro, 2.8 quattro, 3.0 quattro	02.97 - 01.05	1100	1300	PSS65-15-005-03-22	A, 18, 25, 45, 160			40-75	40-75							T
1.8, 1.8 T, 1.9 TDI, 2.0, 2.4, 2.5 TDI, 2.7, 2.7 T, 2.8, 2.8 24V, 3.0, 3.7	01.97 - 01.05	1250	1185	PSS65-15-005-02-22	A, 18, 20, 23, 25, 45, 160			40-75	40-75							T
1.8 T quattro, 2.4 quattro, 2.7 T quattro, 2.8 quattro, 3.0 quattro, 2.5 TDI quattro, S6 quattro	02.97 - 01.05	1350	1300	PSS65-15-005-04-22	A, 18, 22, 25, 45, 160			40-75	40-75							T

AUDI

Modell *Model*	Baujahr *Year*	Achslast Vorne kg *Front Axle Load kg*	Achslast Hinten kg *Rear Axle Load kg*	Artikel-Nr. *Part-No.*	Hinweise *Notes*	ab Nachtrag ...xx BE *from suppl. ...xx of type approval*	bis Nachtrag ...xx BE *to suppl. ...xx of type approval*	ca. Tieferl. Vorne mm *ca. Lowering Front mm*	ca. Tieferl. Hinten mm *ca. Lowering Rear mm*	Ø Vorne mm *Ø Front mm*	Ø Hinten mm *Ø Rear mm*	Verstellbarkeit Vorne *Adjustable Front*	Verstellbarkeit Hinten *Adjustable Rear*	Ersatzteilbez. Vorne *Spare Part Marking Front*	Ersatzteilbez. Hinten *Spare Part Marking Rear*	Gutachten *Homologation*
A6 (4F2, C6)																
Pro-Kit (Performance Fahrwerksfedern | *Performance Springs*)																
2.0 TDI, 2.0 TFSI, 2.4, 2.8 FSI, 3.0, 3.2 FSI	05.04 - 03.11	1215	1130	E10-15-008-01-22	A, 18, 20			30	30					F1533101	F11-15-008-01-HA	T
2.4 quattro, 2.8 FSI quattro, 3.0 quattro, 3.2 FSI quattro	05.04 - 03.11	1215	1240	E10-15-008-02-22	A, 18			30	30					F1533101	F11-15-008-02-HA	T
2.7 TDI, 3.0 TDI	11.04 - 03.11	1350	1130	E10-15-008-04-22	A, 18, 20			30	30					F11-15-008-03-VA	F11-15-008-01-HA	T
2.7 TDI quattro, 3.0 TDI quattro, 3.0 TFSI quattro, 4.2 FSI quattro, 4.2 quattro	05.04 - 03.11	1350	1240	E10-15-008-03-22	A, 18			30	30					F11-15-008-03-VA	F11-15-008-02-HA	T
B12 Pro-Kit (Performance Komplettfahrwerke | *Performance Springs+Shocks*)																
2.0 TDI, 2.0 TFSI, 2.4, 2.8 FSI, 3.0, 3.2 FSI	05.04 - 03.11	1215	1115	E90-15-008-01-22	A, 18, 20, 78, 161			30	30					F1533101	F11-15-008-01-HA	T
2.4 quattro, 2.8 FSI quattro, 3.0 TFSI quattro, 3.0 quattro, 3.2 FSI quattro	05.04 - 03.11	1215	1240	E90-15-008-02-22	A, 18, 78, 161			30	30					F1533101	F11-15-008-02-HA	T
2.7 TDI	11.04 - 03.11	1350	1130	E90-15-008-04-22	A, 18, 20, 78, 161			30	30					F11-15-008-03-VA	F11-15-008-01-HA	T
4.2 quattro, 2.7 TDI quattro, 3.0 TDI quattro, 3.0 TFSI quattro	05.04 - 03.11	1350	1240	E90-15-008-03-22	A, 18, 78, 161			30	30					F11-15-008-03-VA	F11-15-008-02-HA	T
Pro-Street-S (Gewindefahrwerke - höhenverstellbar | *Coil-Overs-Adjustable Ride Hight*)																
2.0 TFSI, 2.4, 2.8 FSI, 3.0, 3.2 FSI, 2.0 TDI, 2.7 TDI, 3.0 TDI, 2.4 quattro, 2.8 FSI quattro, 3.0 quattro, 3.0 TFSI quattro, 3.2 FSI quattro, 4.2 quattro, 4.2 FSI quattro, 2.7 TDI quattro, 3.0 TDI quattro	05.04 - 03.11	1240	1205	PSS65-15-008-01-22	A, 24, 25, 45, 160			35-65	35-65							T
2.0 TFSI, 2.4, 2.8 FSI, 3.0, 3.2 FSI, 2.0 TDI, 2.7 TDI, 3.0 TDI, 2.4 quattro, 2.8 FSI quattro, 3.0 quattro, 3.0 TFSI quattro, 3.2 FSI quattro, 4.2 quattro, 4.2 FSI quattro, 2.7 TDI quattro, 3.0 TDI quattro	05.04 - 03.11	1305	1205	PSS65-15-008-02-22	A, 24, 25, 45, 160			35-65	35-65							T
A6 (4G2, C7, 4GC)																
Pro-Kit (Performance Fahrwerksfedern | *Performance Springs*)																
1.8 TFSI, 2.0 TDI, 2.0 TFSI, 2.8 FSI	03.11 -	1140	1190	E10-15-018-08-22	A, 18, 20			30	25					F11-15-011-01-VA	F11-15-018-01-HA	T
2.0 TDI, 2.8 FSI	03.11 -	1200	1190	E10-15-018-01-22	A, 18, 20			30	25					F11-15-018-01-VA	F11-15-018-01-HA	T
2.8 FSI quattro, 2.0 TDI quattro	11.10 -	1200	1315	E10-15-018-04-22	A, 18			30	25					F11-15-018-01-VA	F11-15-018-03-HA	T
3.0 TDI	11.10 -	1270	1190	E10-15-018-02-22	A, 18, 20			30	25					F11-15-018-03-VA	F11-15-018-01-HA	T
3.0 TDI quattro, 3.0 TFSI quattro	11.10 -	1270	1315	E10-15-018-03-22	A, 18			30	25					F11-15-018-03-VA	F11-15-018-03-HA	T
2.0 TFSI quattro	11.10 -	1200	1315	E10-15-018-04-22	A, 18			25	25					F11-15-018-01-VA	F11-15-018-03-HA	T
B12 Pro-Kit (Performance Komplettfahrwerke | *Performance Springs+Shocks*)																
1.8 TFSI, 2.0 TDI, 2.0 TFSI, 2.8 FSI	11.10 -	1140	1190	E90-15-018-08-22	A, 18, 20, 78, 161, 193			30	25					F11-15-011-01-VA	F11-15-018-01-HA	T
2.0 TDI, 2.8 FSI	11.10 -	1200	1190	E90-15-018-01-22	A, 18, 20, 78, 161, 193			30	25					F11-15-018-01-VA	F11-15-018-01-HA	T
2.8 FSI quattro, 2.0 TDI quattro	11.10 -	1200	1315	E90-15-018-04-22	A, 18, 78, 161, 193			30	25					F11-15-018-01-VA	F11-15-018-03-HA	T
3.0 TDI	11.10 -	1270	1190	E90-15-018-02-22	A, 18, 20, 78, 161, 193			30	25					F11-15-018-03-VA	F11-15-018-01-HA	T
3.0 TDI quattro, 3.0 TFSI quattro	11.10 -	1270	1315	E90-15-018-03-22	A, 18, 78, 161, 193			30	25					F11-15-018-03-VA	F11-15-018-03-HA	T
2.0 TFSI quattro	11.10 -	1200	1315	E90-15-018-04-22	A, 18, 78, 161, 193			25	25					F11-15-018-01-VA	F11-15-018-03-HA	T
A6 Avant (4A, C4)																
Pro-Kit (Performance Fahrwerksfedern | *Performance Springs*)																
2.3, 2.4, 2.5 TDI, 2.6, 2.8	06.94 - 12.97	1160	1080	E1517-140	A, 15, 18, 20			35	30					F1515001	F1517002	T
2.3, 2.4, 2.5 TDI, 2.6, 2.8 - alle Automatik *2.3, 2.4, 2.5 TDI, 2.6, 2.8 - all automatic transmission*	06.94 - 12.97	1160	1080	E1529-140	A, 18, 20			35	30					F1527001	F1517002	T
2.3 quattro, 2.5 TDI quattro, 2.6 quattro, 2.8 quattro	06.94 - 12.97	1240	1200	E1521-140	A, 15, 18			35	30					F1515001	F1521002	T
2.3 quattro, 2.5 TDI quattro, 2.6 quattro, 2.8 quattro - alle Automatik, S6 4.2 quattro, S6 Plus quattro, S6 Turbo quattro *2.3 quattro, 2.5 TDI quattro, 2.6 quattro, 2.8 quattro - all automatic transmission, S6 4.2 quattro, S6 Plus quattro, S6 Turbo quattro*	06.94 - 12.97	1240	1200	E1530-140	A, 18			35	30					F1527001	F1521002	T
B12 Pro-Kit (Performance Komplettfahrwerke | *Performance Springs+Shocks*)																
2.3, 2.5 TDI, 2.6, 2.8	06.94 - 12.97	1160	1080	E90-15-012-03-22	A, 15, 18, 20, 78, 161			35	30					F1515001	F1517002	T
2.3, 2.5 TDI, 2.6, 2.8	06.94 - 12.97	1160	1080	E90-15-012-07-22	A, 18, 20, 71, 78, 161			35	30					F1527001	F1517002	T
2.3 quattro, 2.5 TDI quattro, 2.6 quattro, 2.8 quattro	06.94 - 12.97	1240	1200	E90-15-012-04-22	A, 15, 18, 76, 78, 161			35	30					F1515001	F1521002	T
2.3 quattro, 2.5 TDI quattro, 2.6 quattro, 2.8 quattro, S6 4.2 quattro, S6 Plus quattro, S6 Turbo quattro	06.94 - 12.97	1240	1200	E90-15-012-08-22	A, 18, 72, 76, 78, 161			35	30					F1527001	F1521002	T
A6 Avant (4B, C5)																
Pro-Kit (Performance Fahrwerksfedern | *Performance Springs*)																
1.8, 1.8 T, 1.9 TDI, 2.0	12.97 - 01.05	1150	1130	E1563-140	A, 18, 20			30	30					F1541001	F1563002	T
1.8 T quattro	12.97 - 01.05	1150	1230	E1565-140	A, 18			30	30					F1541001	F1565002	T
2.4, 2.5 TDI, 2.7 T, 2.8, 3.0	12.97 - 01.05	1230	1130	E1564-140	A, 18, 20			30	30					F1558001	F1563002	T
2.4 quattro, 2.5 TDI quattro, 2.7 T quattro, 2.8 quattro, 3.0 quattro	12.97 - 01.05	1230	1230	E1566-140	A, 18			30	30					F1558001	F1565002	T
B12 Pro-Kit (Performance Komplettfahrwerke | *Performance Springs+Shocks*)																
1.8, 1.8 T, 1.9 TDI	12.97 - 12.00	1150	1130	E90-15-005-09-22	A, 18, 20, 74, 78, 108, 161			30	30					F1541001	F1563002	T
1.8, 1.8 T, 1.9 TDI, 2.0	01.01 - 01.05	1150	1130	E90-15-005-10-22	A, 18, 20, 74, 78, 134, 161			30	30					F1541001	F1563002	T
1.8 T quattro	01.01 - 01.05	1150	1230	E90-15-005-14-22	A, 18, 74, 78, 134, 161			30	30					F1541001	F1565002	T
1.8 T quattro	12.98 - 12.00	1150	1230	E90-15-005-13-22	A, 18, 74, 78, 136, 161			30	30					F1541001	F1565002	T
2.4, 2.5 TDI, 2.7 T, 2.8	12.97 - 12.00	1230	1130	E90-15-005-11-22	A, 18, 20, 74, 78, 108, 161			30	30					F1558001	F1563002	T

AUDI

AUDI

Modell *Model*	Baujahr *Year*	Achslast Vorne kg *Front Axle Load kg*	Achslast Hinten kg *Rear Axle Load kg*	Artikel-Nr. *Part-No.*	Hinweise *Notes*	ab Nachtrag ...xx BE *from suppl. ...xx of type approval*	bis Nachtrag ...xx BE *to suppl. ...xx of type approval*	ca. Tieferl. Vorne mm *ca. Lowering Front mm*	ca. Tieferl. Hinten mm *ca. Lowering Rear mm*	Ø Vorne mm *Ø Front mm*	Ø Hinten mm *Ø Rear mm*	Verstellbarkeit Vorne *Adjustable Front*	Verstellbarkeit Hinten *Adjustable Rear*	Ersatzteilbez. Vorne *Spare Part Marking Front*	Ersatzteilbez. Hinten *Spare Part Marking Rear*	Gutachten *Homologation*
A6 Avant (4B, C5)																
B12 Pro-Kit (Performance Komplettfahrwerke | *Performance Springs+Shocks*)																
2.4, 2.5 TDI, 2.7 T, 2.8, 3.0	01.01 - 01.05	1230	1130	E90-15-005-12-22	A, 18, 20, 74, 78, 134, 161			30	30					F1558001	F1565002	T
2.4 quattro, 2.5 TDI quattro, 2.7 T quattro, 2.8 quattro, 3.0 quattro	01.01 - 01.05	1230	1230	E90-15-005-16-22	A, 18, 74, 78, 134, 161			30	30					F1558001	F1565002	T
2.4 quattro, 2.5 TDI quattro, 2.7 T quattro, 2.8 quattro	12.98 - 12.00	1230	1230	E90-15-005-15-22	A, 18, 74, 78, 136, 161			30	30					F1558001	F1565002	T
Pro-Street-S (Gewindefahrwerke - höhenverstellbar | *Coil-Overs-Adjustable Ride Hight*)																
1.8, 1.8 T, 1.9 TDI, 2.0, 2.4, 2.5 TDI, 2.7 T, 2.8, 3.0, 3.7	12.97 - 01.05	1100	1185	PSS65-15-005-01-22	A, 18, 20, 23, 25, 45, 160			40-75	40-75							T
1.8 T quattro, 2.4 quattro, 2.5 TDI quattro, 2.7 T quattro, 2.8 quattro, 3.0 quattro	12.97 - 01.05	1100	1300	PSS65-15-005-03-22	A, 18, 25, 45, 160			40-75	40-75							T
1.8, 1.8 T, 1.9 TDI, 2.0, 2.4, 2.5 TDI, 2.7 T, 2.8, 3.0, 3.7	12.97 - 01.05	1250	1185	PSS65-15-005-02-22	A, 18, 20, 23, 25, 45, 160			40-75	40-75							T
1.8 T quattro, 2.4 quattro, 2.5 TDI quattro, 2.7 T quattro, 2.8 quattro, 3.0 quattro, S6 quattro	12.97 - 01.05	1350	1300	PSS65-15-005-04-22	A, 18, 25, 45, 160			40-75	40-75							T
A6 Avant (4F5, C6)																
Pro-Kit (Performance Fahrwerksfedern | *Performance Springs*)																
2.0 TDI, 2.0 TFSI, 2.4, 2.8 FSI, 3.0, 3.2 FSI	03.05 - 08.11	1215	1240	E10-15-008-05-22	A, 18, 20			30	30					F1533101	F11-15-008-02-HA	T
2.4 quattro, 2.8 FSI quattro, 3.0 quattro, 3.2 FSI quattro	03.05 - 08.11	1215	1335	E10-15-008-07-22	A, 18			30	30					F1533101	F11-15-008-07-HA	T
2.7 TDI, 3.0 TDi	03.05 - 08.11	1350	1240	E10-15-008-06-22	A, 18, 20			30	30					F11-15-008-03-VA	F11-15-008-02-HA	T
2.7 TDI quattro, 3.0 TDI quattro, 3.0 TFSI quattro, 4.2 FSI quattro, 4.2 quattro	03.05 - 08.11	1350	1335	E10-15-008-08-22	A, 18			30	30					F11-15-008-03-VA	F11-15-008-07-HA	T
S6 quattro	03.06 - 08.11	1350	1335	E10-15-008-09-22	A, 18			20	10					F11-15-008-03-VA	F11-15-008-07-HA	T
B12 Pro-Kit (Performance Komplettfahrwerke | *Performance Springs+Shocks*)																
2.0 TDI, 2.0 TFSI, 2.4, 2.8 FSI, 3.0, 3.2 FSI	03.05 - 08.11	1215	1240	E90-15-008-05-22	A, 18, 20, 78, 161			30	30					F1533101	F11-15-008-02-HA	T
2.4 quattro, 2.8 FSI quattro, 3.0 quattro, 3.2 FSI quattro	03.05 - 08.11	1215	1335	E90-15-008-07-22	A, 18, 78, 161			30	30					F1533101	F11-15-008-07-HA	T
2.7 TDI, 3.0 TDI	03.05 - 08.11	1350	1240	E90-15-008-06-22	A, 18, 20, 78, 161			30	30					F11-15-008-03-VA	F11-15-008-02-HA	T
2.7 TDI quattro, 3.0 TDI quattro, 3.0 TFSI quattro, 4.2 FSI quattro, 4.2 quattro	03.05 - 08.11	1350	1335	E90-15-008-08-22	A, 18, 78, 161			30	30					F11-15-008-03-VA	F11-15-008-07-HA	T
S6 quattro	03.06 - 08.11	1350	1335	E90-15-008-09-22	A, 18, 78, 161			20	10					F11-15-008-03-VA	F11-15-008-07-HA	T
Pro-Street-S (Gewindefahrwerke - höhenverstellbar | *Coil-Overs-Adjustable Ride Hight*)																
2.0 TFSI, 2.4, 2.8 FSI, 3.0, 3.2 FSI, 2.0 TDI, 2.7 TDI, 3.0 TDI, 2.4 quattro, 2.8 FSI quattro, 3.0 quattro, 3.0 TFSI quattro, 3.2 FSI quattro, 4.2 quattro, 4.2 FSI quattro, 2.7 TDI quattro, 3.0 TDI quattro	05.04 - 03.11	1240	1300	PSS65-15-008-03-22	A, 18, 24, 25, 45, 160			35-65	35-65							T
2.0 TFSI, 2.4, 2.8 FSI, 3.0, 3.2 FSI, 2.0 TDI, 2.7 TDI, 3.0 TDI, 2.4 quattro, 2.8 FSI quattro, 3.0 quattro, 3.0 TFSI quattro, 3.2 FSI quattro, 4.2 quattro, 4.2 FSI quattro, 2.7 TDI quattro, 3.0 TDI quattro	05.04 - 03.11	1305	1300	PSS65-15-008-04-22	A, 18, 24, 25, 45, 160			35-65	35-65							T
A6 Avant (4G5, C7, 4GD)																
Pro-Kit (Performance Fahrwerksfedern | *Performance Springs*)																
1.8 TFSI, 2.0 TDI, 2.0 TFSI, 2.8 FSI	05.11 -	1140	1360	E10-15-018-09-22	A, 18, 20			30	25					F11-15-011-01-VA	F11-15-018-06-HA	T
2.8 FSI quattro, 2.0 TDI quattro	05.11 -	1200	1360	E10-15-018-06-22	A, 18			30	25-30					F11-15-018-01-VA	F11-15-018-06-HA	T
2.0 TFSI quattro	05.11 -	1200	1360	E10-15-018-06-22	A, 18			25	25					F11-15-018-01-VA	F11-15-018-06-HA	T
2.0 TDI, 2.8 FSI, 3.0 TDI	05.11 -	1200	1360	E10-15-018-06-22	A, 18, 20			30	25-30					F11-15-018-01-VA	F11-15-018-06-HA	T
3.0 TDI	05.11 -	1270	1360	E10-15-018-07-22	A, 18, 20			30	25-30					F11-15-018-03-VA	F11-15-018-06-HA	T
3.0 TDI quattro, 3.0 TFSI quattro	05.11 -	1270	1360	E10-15-018-07-22	A, 18			30	25-30					F11-15-018-03-VA	F11-15-018-06-HA	T
B12 Pro-Kit (Performance Komplettfahrwerke | *Performance Springs+Shocks*)																
1.8 TFSI, 2.0 TDI, 2.0 TFSI, 2.8 FSI	05.11 -	1140	1360	E90-15-018-09-22	A, 18, 20, 78, 161, 193			30	25					F11-15-011-01-VA	F11-15-018-06-HA	T
2.0 TDI, 2.8 FSI, 3.0 TDI	05.11 -	1200	1360	E90-15-018-06-22	A, 18, 20, 78, 161, 193			30	25-30					F11-15-018-01-VA	F11-15-018-06-HA	T
2.8 FSI quattro, 2.0 TDI quattro	05.11 -	1200	1360	E90-15-018-06-22	A, 18, 78, 161, 193			30	25-30					F11-15-018-01-VA	F11-15-018-06-HA	T
2.0 TFSI quattro	05.11 -	1200	1360	E90-15-018-06-22	A, 18, 78, 161, 193			25	25					F11-15-018-01-VA	F11-15-018-06-HA	T
3.0 TDI	05.11 -	1270	1360	E90-15-018-07-22	A, 18, 20, 78, 161, 193			30	25-30					F11-15-018-03-VA	F11-15-018-06-HA	T
3.0 TDI quattro, 3.0 TFSI quattro	05.11 -	1270	1360	E90-15-018-07-22	A, 18, 78, 161, 193			30	25-30					F11-15-018-03-VA	F11-15-018-06-HA	T
A7 Sportback (4GA)																
Pro-Kit (Performance Fahrwerksfedern | *Performance Springs*)																
2.8 FSI, 2.8 FSI quattro, 3.0 TDI	10.10 -	1200	1315	E10-15-018-05-22	A, 18			30	25					F11-15-018-01-VA	F11-15-018-03-HA	T
3.0 TDI quattro, 3.0 TFSI quattro	10.10 -	1270	1315	E10-15-018-03-22	A, 18			30	25					F11-15-018-03-VA	F11-15-018-03-HA	T
B12 Pro-Kit (Performance Komplettfahrwerke | *Performance Springs+Shocks*)																
2.8 FSI, 2.8 FSI quattro, 3.0 TDI	10.10 -	1200	1315	E90-15-018-05-22	A, 18, 78, 161, 193			30	25					F11-15-018-01-VA	F11-15-018-03-HA	T
3.0 TDI quattro, 3.0 TFSI quattro	10.10 -	1270	1315	E90-15-018-03-22	A, 18, 78, 161, 193			30	25					F11-15-018-03-VA	F11-15-018-03-HA	T
A8 (4D2, 4D8)																
Pro-Kit (Performance Fahrwerksfedern | *Performance Springs*)																
2.5 TDI, 2.5 TDI quattro, 2.8, 2.8 quattro	03.94 - 09.02	1255	1230	E1533-240	A, 18			25	25					F1533101	F1533002	T
3.7, 3.7 quattro, 4.2 quattro	03.94 - 09.02	1255	1230	E1533-140	A, 18			25	25					F1533001	F1533002	T

AUDI

Modell	Baujahr	Achslast Vorne kg	Achslast Hinten kg	Artikel-Nr.	Hinweise	ab Nachtrag ...xx BE	bis Nachtrag ...xx BE	ca. Tieferl. Vorne mm	ca. Tieferl. Hinten mm	Ø Vorne mm	Ø Hinten mm	Verstellbarkeit Vorne	Verstellbarkeit Hinten	Ersatzteilbez. Vorne	Ersatzteilbez. Hinten	Gutachten
Model	*Year*	*Front Axle Load kg*	*Rear Axle Load kg*	*Part-No.*	*Notes*	*from suppl. ...xx of type approval*	*to suppl. ...xx of type approval*	*ca. Lowering Front mm*	*ca. Lowering Rear mm*	*Ø Front mm*	*Ø Rear mm*	*Adjustable Front*	*Adjustable Rear*	*Spare Part Marking Front*	*Spare Part Marking Rear*	*Homologation*
A8 (4D2, 4D8)																
B12 Pro-Kit (Performance Komplettfahrwerke | *Performance Springs+Shocks*)																
2.5 TDI, 2.5 TDI quattro, 2.8, 2.8 quattro	03.94 - 04.00	1255	1230	E90-15-019-03-22	A, 18, 78, 109, 161			25	25					F1533101	F1533002	T
2.5 TDI, 2.5 TDI quattro, 2.8, 2.8 quattro	05.00 - 09.02	1255	1230	E90-15-019-04-22	A, 18, 78, 137, 161			25	25					F1533101	F1533002	T
3.7, 3.7 quattro, 4.2 quattro	03.94 - 04.00	1255	1230	E90-15-019-01-22	A, 18, 78, 109, 161			25	25					F1533001	F1533002	T
3.7, 3.7 quattro, 4.2 quattro	05.00 - 09.02	1255	1230	E90-15-019-02-22	A, 18, 78, 137, 161			25	25					F1533001	F1533002	T
CABRIOLET (8G7, B4) ***CONVERTIBLE (8G7, B4)***																
Pro-Kit (Performance Fahrwerksfedern | *Performance Springs*)																
1.8, 1.9 TDI, 2.0 16V, 2.0 E, 2.3 E	05.91 - 08.00	1100	870	E1518-140	A, 12, 18, 20			20	20					F1518001	F1518002	T
2.6, 2.8	11.92 - 08.00	1100	870	E1518-240	A, 12, 18, 20			20	20					F1508001	F1518002	T
B12 Pro-Kit (Performance Komplettfahrwerke | *Performance Springs+Shocks*)																
1.8, 1.9 TDI, 2.0 16V, 2.0 E, 2.3 E	05.91 - 08.00	1100	870	E90-15-016-01-22	A, 12, 18, 20, 35, 78, 161			20	20					F1518001	F1518002	T
2.6, 2.8	11.92 - 08.00	1100	870	E90-15-016-02-22	A, 12, 18, 20, 35, 78, 161			20	20					F1508001	F1518002	T
Q3 (8U)																
Pro-Kit (Performance Fahrwerksfedern | *Performance Springs*)																
2.0 TFSI, 2.0 TDI	06.11 -	1100	1035	E10-15-020-01-22	A, 18, 20			25	25					F11-15-007-03-VA	F11-15-007-01-HA	T
2.0 TFSI quattro	06.11 -	1100	1115	E10-15-020-02-22	A, 18			25	25					F11-15-007-03-VA	F11-85-012-01-HA	T
2.0 TDI quattro, 2.0 TFSI quattro	06.11 -	1165	1115	E10-15-020-03-22	A, 18			25	25					F11-85-012-02-VA	F11-85-012-01-HA	T
B12 Pro-Kit (Performance Komplettfahrwerke | *Performance Springs+Shocks*)																
2.0 TFSI, 2.0 TDI	06.11 -	1100	1035	E90-15-020-01-22	A, 18, 20, 34, 78, 161			25	25					F11-15-007-03-VA	F11-15-007-01-HA	T
2.0 TFSI quattro	06.11 -	1100	1115	E90-15-020-02-22	A, 18, 34, 78, 161			25	25					F11-15-007-03-VA	F11-85-012-01-HA	T
2.0 TDI quattro, 2.0 TFSI quattro	06.11 -	1165	1115	E90-15-020-03-22	A, 18, 34, 78, 161			25	20-25					F11-85-012-02-VA	F11-85-012-01-HA	T
Q5 (8R)																
Pro-Kit (Performance Fahrwerksfedern | *Performance Springs*)																
2.0 TDI, 2.0 TDI quattro, 2.0 TFSI quattro, 3.2 FSI quattro	11.08 -	1235	1345	E10-15-013-01-22	A, 18			30	25					F11-15-013-01-VA	F11-15-013-01-HA	T
3.0 TDI quattro, 3.0 TFSI quattro	11.08 -	1315	1345	E10-15-013-02-22	A, 18			30	25					F11-15-013-02-VA	F11-15-013-01-HA	T
SQ5 TFSI quattro, SQ5 TDI quattro	11.08 -	1315	1345	E10-15-013-02-22	A, 18			15	5					F11-15-013-02-VA	F11-15-013-01-HA	T
Pro-Tronic (Elektronische Performance Fahrwerksmodule | *Electronic Performance Suspension Moduls*)																
Alle Motorisierungen / *all motorisation*	11.08 -			AM65-15-011-01-22	A, 175											
B12 Pro-Kit (Performance Komplettfahrwerke | *Performance Springs+Shocks*)																
2.0 TDI, 2.0 TDI quattro, 2.0 TFSI quattro, 3.2 FSI quattro	11.08 -	1235	1345	E90-15-013-01-22	A, 18, 21, 78, 161			30	25					F11-15-013-01-VA	F11-15-013-01-HA	T
3.0 TDI quattro, 3.0 TFSI quattro	11.08 -	1315	1345	E90-15-013-02-22	A, 18, 21, 78, 161			30	25					F11-15-013-02-VA	F11-15-013-01-HA	T
SQ5 TFSI quattro, SQ5 TDI quattro	11.08 -	1315	1345	E90-15-013-02-22	A, 18, 21, 78, 161			15	5					F11-15-013-02-VA	F11-15-013-01-HA	T
TT (8N3)																
Pro-Kit (Performance Fahrwerksfedern | *Performance Springs*)																
1.8 T	10.98 - 06.06	980	760	E1567-140	A, 18, 20			25	25					F1567001	F8570002	T
1.8 T quattro	10.98 - 06.06	1050	920	E1570-140	A, 18			25	25					F8592001	F11-15-001-02-HA	T
Anti-Roll-Kit (Performance Stabilisatoren | *Performance Sway Bars*)																
1.8 T	10.98 - 06.06			E1567-320	A, 18, 20, 22, 45					22	25	2-fach verstellbar *2-way adjustable*	nicht verstellbar *not adjustable*	AS1567320VA	AS1540320HA	T
1.8 T, 1.8 T quattro	10.98 - 06.06			E1567-310	A, 18, 22, 45					22		2-fach verstellbar *2-way adjustable*		AS1567320VA		T
B12 Pro-Kit (Performance Komplettfahrwerke | *Performance Springs+Shocks*)																
1.8 T	10.98 - 06.06	980	760	E90-15-001-01-22	A, 18, 20, 78, 161			25	25					F1567001	F8570002	T
1.8 T quattro	10.98 - 06.06	1050	920	E90-15-001-02-22	A, 18, 78, 161			25	25					F8592001	F11-15-001-02-HA	T
Pro-Street-S (Gewindefahrwerke - höhenverstellbar | *Coil-Overs-Adjustable Ride Hight*)																
1.8 T	10.98 - 06.06	1030	1025	PSS65-85-001-01-22	A, 18, 20, 23, 25, 28, 45, 160			20-45	20-45							T
1.8 T quattro	10.98 - 06.06	1040	900	PSS65-15-001-01-22	A, 18, 23, 25, 28, 45, 160			25-55	25-55							T
3.2 VR6 quattro	07.03 - 06.06	1100	920	PSS65-85-001-04-22	A, 18, 23, 25, 28, 45, 160			25-50	25-50							T
TT (8J3)																
Pro-Kit (Performance Fahrwerksfedern | *Performance Springs*)																
1.8 TFSI, 2.0 TFSI	08.06 -	1005	785	E10-15-009-01-22	A, 18, 20		16	25	20					F11-15-009-01-VA	F11-15-009-01-HA	T
2.0 TFSI quattro, 2.0 TTS quattro, 2.0 TDI quattro	05.08 -	1005	885	E10-15-009-05-22	A		16	25	20					F11-15-009-01-VA	F11-15-009-02-HA	T
3.2 V6 quattro	08.06 - 06.10	1040	885	E10-15-009-02-22	A		16	25	20					F11-15-009-02-VA	F11-15-009-02-HA	T
Pro-Tronic (Elektronische Performance Fahrwerksmodule | *Electronic Performance Suspension Moduls*)																
Alle Motorisierungen / *all motorisation*	08.06 -			AM65-15-007-01-22	A, 175											
B12 Pro-Kit (Performance Komplettfahrwerke | *Performance Springs+Shocks*)																
1.8 TFSI, 2.0 TFSI	08.06 -	1005	785	E90-15-009-01-22	A, 18, 20, 78, 161		16	25	20					F11-15-009-01-VA	F11-15-009-01-HA	T
2.0 TFSI quattro, 2.0 TTS quattro, 2.0 TDI quattro	05.08 -	1005	885	E90-15-009-05-22	A, 78, 161		16	25	20					F11-15-009-01-VA	F11-15-009-02-HA	T
3.2 V6 quattro	08.06 - 06.10	1040	885	E90-15-009-02-22	A, 78, 161		16	25	20					F11-15-009-02-VA	F11-15-009-02-HA	T

Modell	Baujahr	Achslast Vorne kg	Achslast Hinten kg	Artikel-Nr.	Hinweise	ab Nachtrag ...xx BE	bis Nachtrag ...xx BE	ca. Tieferl. Vorne mm	ca. Tieferl. Hinten mm	Ø Vorne mm	Ø Hinten mm	Verstellbarkeit Vorne	Verstellbarkeit Hinten	Ersatzteilbez. Vorne	Ersatzteilbez. Hinten	Gutachten
Model	*Year*	*Front Axle Load kg*	*Rear Axle Load kg*	*Part-No.*	*Notes*	*from suppl. ...xx of type approval*	*to suppl. ...xx of type approval*	*ca. Lowering Front mm*	*ca. Lowering Rear mm*	*Ø Front mm*	*Ø Rear mm*	*Adjustable Front*	*Adjustable Rear*	*Spare Part Marking Front*	*Spare Part Marking Rear*	*Homologation*
TT (8J3)																
Pro-Street-S (Gewindefahrwerke - höhenverstellbar | *Coil-Overs-Adjustable Ride Hight*)																
1.8 TFSI, 2.0 TDI quattro, 2.0 TFSI, 2.0 TFSI quattro	08.06 -	965	885	PSS65-81-009-01-22	A, 24, 25, 34, 45, 101, 160			20-50	20-50							T
2.5 TFSI RS quattro	08.06 -	1040	870	PSS65-81-009-02-22	A, 24, 25, 34, 45, 101, 160			2-25	5-20							T
2.0 TFSI quattro, 2.0 TTS quattro, 2.0 TDI quattro	08.06 -	1035	885	PSS65-81-009-02-22	A, 24, 25, 34, 45, 101, 160		16	10-35	5-30							T
TT (FV3)																
Pro-Kit (Performance Fahrwerksfedern | *Performance Springs*)																
1.8 TFSI, 2.0 TFSI, 2.0 TFSI quattro, 2.0 TTS, 2.0 TTS quattro, 2.0 TDI	07.14 -	1025	870	E10-15-022-01-22	A, 18	17		30	30					F11-15-022-01-FA	F11-15-009-01-HA	T
Anti-Roll-Kit (Performance Stabilisatoren | *Performance Sway Bars*)																
1.8 TFSI, 2.0 TFSI, 2.0 TTS, 2.0 TDI	07.14 -			E40-15-021-01-11	A, 18, 20, 22, 45, 170	17				28 Rohr *28 tube*	25 Rohr *25 tube*	2-fach verstellbar *2-way adjustable*	nicht verstellbar *not adjustable*	AS41-15-021-01-VA	AS41-15-021-01-HA	T
2.0 TFSI quattro, 2.0 TTS quattro	07.14 -			E40-15-021-02-11	A, 18, 22, 45, 170	17				28 Rohr *28 tube*	25 Rohr *25 tube*	2-fach verstellbar *2-way adjustable*	2-fach verstellbar *2-way adjustable*	AS41-15-021-02-VA	AS41-15-021-02-HA	T
Pro-Tronic (Elektronische Performance Fahrwerksmodule | *Electronic Performance Suspension Moduls*)																
Alle Motorisierungen / *all motorisation*	07.14 -			AM65-15-022-01-22	A, 175											
TT Roadster (8N9)																
Pro-Kit (Performance Fahrwerksfedern | *Performance Springs*)																
1.8 T	10.99 - 06.06	1040	820	E10-15-001-01-22	A, 18, 20			25	25					F8592001	F11-15-001-01-HA	T
1.8 T quattro	10.99 - 06.06	1050	920	E1570-140	A, 18			25	25					F8592001	F11-15-001-02-HA	T
Anti-Roll-Kit (Performance Stabilisatoren | *Performance Sway Bars*)																
1.8 T	10.99 - 06.06			E1567-320	A, 18, 20, 22, 45					22	25	2-fach verstellbar *2-way adjustable*	nicht verstellbar *not adjustable*	AS1567320VA	AS1540320HA	T
1.8 T, 1.8 T quattro	10.99 - 06.06			E1567-310	A, 18, 22, 45					22		2-fach verstellbar *2-way adjustable*		AS1567320VA		T
B12 Pro-Kit (Performance Komplettfahrwerke | *Performance Springs+Shocks*)																
1.8 T	10.99 - 06.06	1040	820	E90-15-001-04-22	A, 18, 20, 78, 161			25	25					F8592001	F11-15-001-01-HA	T
1.8 T quattro	10.99 - 06.06	1050	920	E90-15-001-02-22	A, 18, 78, 161			25	25					F8592001	F11-15-001-02-HA	T
Pro-Street-S (Gewindefahrwerke - höhenverstellbar | *Coil-Overs-Adjustable Ride Hight*)																
1.8 T	10.99 - 06.06	1030	1025	PSS65-85-001-01-22	A, 18, 23, 25, 28, 45, 160			20-45	20-45							T
1.8 T quattro	10.99 - 06.06	1040	900	PSS65-15-001-01-22	A, 18, 23, 25, 28, 45, 160			25-55	25-55							T
3.2 VR6 quattro	07.03 - 06.06	1100	920	PSS65-85-001-04-22	A, 18, 23, 25, 28, 45, 160			25-50	25-50							T
TT Roadster (8J9)																
Pro-Kit (Performance Fahrwerksfedern | *Performance Springs*)																
1.8 TFSI, 2.0 TFSI	03.07 -	1005	785	E10-15-009-03-22	A, 18, 20		16	25	20					F11-15-009-01-VA	F11-15-009-01-HA	T
2.0 TFSI quattro, 2.0 TTS quattro, 2.0 TDI quattro	05.08 -	1005	885	E10-15-009-05-22	A		16	25	20					F11-15-009-01-VA	F11-15-009-02-HA	T
3.2 V6 quattro	03.07 - 06.10	1040	885	E10-15-009-04-22	A		16	25	20					F11-15-009-02-VA	F11-15-009-02-HA	T
Pro-Tronic (Elektronische Performance Fahrwerksmodule | *Electronic Performance Suspension Moduls*)																
Alle Motorisierungen / *all motorisation*	03.07 -			AM65-15-007-01-22	A, 175											
B12 Pro-Kit (Performance Komplettfahrwerke | *Performance Springs+Shocks*)																
1.8 TFSI, 2.0 TFSI	06.08 -	1005	785	E90-15-009-03-22	A, 18, 20, 21, 78, 161		16	25	20					F11-15-009-01-VA	F11-15-009-01-HA	T
2.0 TFSI quattro, 2.0 TTS quattro, 2.0 TDI quattro	05.08 -	1005	885	E90-15-009-05-22	A, 78, 161		16	25	20					F11-15-009-01-VA	F11-15-009-02-HA	T
3.2 V6 quattro	03.07 - 06.10	1040	885	E90-15-009-04-22	A, 21, 78, 161		16	25	20					F11-15-009-02-VA	F11-15-009-02-HA	T
Pro-Street-S (Gewindefahrwerke - höhenverstellbar | *Coil-Overs-Adjustable Ride Hight*)																
1.8 TFSI, 2.0 TDI quattro, 2.0 TFSI, 2.0 TFSI quattro, 3.2 V6 quattro	03.07 -	965	1150	PSS65-85-014-01-22	A, 24, 25, 34, 45, 101, 160			20-50	20-50							T
1.8 TFSI, 2.0 TDI quattro, 2.0 TFSI, 2.0 TFSI quattro, 3.2 V6 quattro	03.07 -	965	1150	PSS65-85-014-02-22	A, 24, 25, 35, 45, 101, 160			20-50	20-50							T
1.8 TFSI, 2.0 TDI quattro, 2.0 TFSI, 2.0 TFSI quattro, 3.2 V6 quattro	03.07 -	1040	1150	PSS65-85-014-03-22	A, 24, 25, 34, 45, 101, 160			20-50	20-50							T
1.8 TFSI, 2.0 TDI quattro, 2.0 TFSI, 2.0 TFSI quattro, 3.2 V6 quattro	03.07 -	1040	1150	PSS65-85-014-04-22	A, 24, 25, 35, 45, 101, 160			20-50	20-50							T
2.0 TFSI quattro, 2.0 TTS quattro	05.08 -	1040	1150	PSS65-85-014-03-22	A, 24, 25, 34, 45, 101, 160			10-35	5-30							T
2.0 TFSI quattro, 2.0 TTS quattro	05.08 -	1040	1150	PSS65-85-014-04-22	A, 24, 25, 35, 45, 101, 160			10-35	5-30							T
2.5 TFSI RS quattro	07.09 -	1040	1150	PSS65-85-014-03-22	A, 24, 25, 34, 45, 101, 160			0-25	0-20							T
2.5 TFSI RS quattro	07.09 -	1040	1150	PSS65-85-014-04-22	A, 24, 25, 35, 45, 101, 160			0-25	0-20							T
TT Roadster (FV9)																
Pro-Kit (Performance Fahrwerksfedern | *Performance Springs*)																
1.8 TFSI, 2.0 TFSI, 2.0 TFSI quattro, 2.0 TTS, 2.0 TTS quattro, 2.0 TDI	11.14 -	1025	870	E10-15-022-01-22	A, 18	17		30	30					F11-15-022-01-FA	F11-15-009-01-HA	T
Anti-Roll-Kit (Performance Stabilisatoren | *Performance Sway Bars*)																
1.8 TFSI, 2.0 TFSI, 2.0 TTS, 2.0 TDI	11.14 -			E40-15-021-01-11	A, 18, 20, 22, 45, 170	17				28 Rohr *28 tube*	25 Rohr *25 tube*	2-fach verstellbar *2-way adjustable*	nicht verstellbar *not adjustable*	AS41-15-021-01-VA	AS41-15-021-01-HA	T
2.0 TFSI quattro, 2.0 TTS quattro	11.14 -			E40-15-021-02-11	A, 18, 22, 45, 170	17				28 Rohr *28 tube*	25 Rohr *25 tube*	2-fach verstellbar *2-way adjustable*	2-fach verstellbar *2-way adjustable*	AS41-15-021-02-VA	AS41-15-021-02-HA	T
Pro-Tronic (Elektronische Performance Fahrwerksmodule | *Electronic Performance Suspension Moduls*)																
Alle Motorisierungen / *all motorisation*	11.14 -			AM65-15-022-01-22	A, 175											

BMW

Modell *Model*	Baujahr *Year*	Achslast Vorne kg *Front Axle Load kg*	Achslast Hinten kg *Rear Axle Load kg*	Artikel-Nr. *Part-No.*	Hinweise *Notes*	ab Nachtrag ...xx BE *from suppl. ...xx of type approval*	bis Nachtrag ...xx BE *to suppl. ...xx of type approval*	ca. Tieferl. Vorne mm *ca. Lowering Front mm*	ca. Tieferl. Hinten mm *ca. Lowering Rear mm*	Ø Vorne mm *Ø Front mm*	Ø Hinten mm *Ø Rear mm*	Verstellbarkeit Vorne *Adjustable Front*	Verstellbarkeit Hinten *Adjustable Rear*	Ersatzteilbez. Vorne *Spare Part Marking Front*	Ersatzteilbez. Hinten *Spare Part Marking Rear*	Gutachten *Homologation*
1 (E87)																
Pro-Kit (Performance Fahrwerksfedern | *Performance Springs*)																
116 i, 118 i, 120 i	11.03 - 09.12	875	1060	E10-20-013-01-22	A, 18, 20, 68			30	25					F11-20-013-01-VA	F11-20-013-01-HA	T
116 d, 118 d, 120 d, 123 d, 130 i	11.03 - 09.12	920	1060	E10-20-013-02-22	A, 18, 20, 68			30	25					F11-20-013-02-VA	F11-20-013-01-HA	T
Sportline (Performance Fahrwerksfedern Sport | *Sport Performance Springs*)																
116 i, 118 i, 120 i	11.03 - 09.12	895	1060	E20-20-013-01-22	A, 18, 20, 68			45-50	35					F21-20-013-01-VA	F21-20-013-01-HA	ABE
116 d, 118 d, 120 d, 123 d, 130 i	11.03 - 09.12	920	1060	E20-20-013-02-22	A, 18, 20, 68			45-50	35					F21-20-013-02-VA	F21-20-013-01-HA	ABE
Anti-Roll-Kit (Performance Stabilisatoren | *Performance Sway Bars*)																
116 d, 116 i, 118 d, 118 i, 120 d, 120 i, 123 d, 130 i	11.03 - 09.12			E40-20-013-01-11	A, 18, 20, 22, 45					28	15	nicht verstellbar *not adjustable*	nicht verstellbar *not adjustable*	AS41-20-013-01-VA	AS41-20-013-01-HA	T
B12 Pro-Kit (Performance Komplettfahrwerke | *Performance Springs+Shocks*)																
116 i, 118 i, 120 i	11.03 - 09.12	875	1060	E90-20-013-01-22	A, 18, 20, 68, 78, 161			30	25					F11-20-013-01-VA	F11-20-013-01-HA	T
116 d, 118 d, 120 d, 123 d, 130 i	11.03 - 09.12	920	1060	E90-20-013-02-22	A, 18, 20, 68, 78, 161			30	25					F11-20-013-02-VA	F11-20-013-01-HA	T
B12 Sportline (Performance Komplettfahrwerke Sport | *Sport Performance Springs+Shocks*)																
116 i, 118 i, 120 i	11.03 - 09.12	895	1060	E95-20-013-01-22	A, 18, 20, 68, 78, 161			45-50	35					F21-20-013-01-VA	F21-20-013-01-HA	ABE
116 d, 118 d, 120 d, 123 d, 130 i	11.03 - 09.12	920	1060	E95-20-013-02-22	A, 18, 20, 68, 78, 161			45-50	35					F21-20-013-02-VA	F21-20-013-01-HA	ABE
Pro-Street-S (Gewindefahrwerke - höhenverstellbar | *Coil-Overs-Adjustable Ride Hight*)																
116 d, 116 i, 118 d, 118 i, 120 d, 120 i, 123 d, 130 i	11.03 - 09.12	945	1070	PSS65-20-013-01-22	A, 18, 20, 24, 25, 45, 160			35-65	35-65							T
1 (E81)																
Pro-Kit (Performance Fahrwerksfedern | *Performance Springs*)																
116 i, 118 i, 120 i	09.06 - 09.12	875	1060	E10-20-013-01-22	A, 18, 20, 68			30	25					F11-20-013-01-VA	F11-20-013-01-HA	T
116 d, 118 d, 120 d, 123 d, 130 i	09.06 - 09.12	920	1060	E10-20-013-02-22	A, 18, 20, 68			30	25					F11-20-013-02-VA	F11-20-013-01-HA	T
Sportline (Performance Fahrwerksfedern Sport | *Sport Performance Springs*)																
116 i, 118 i, 120 i	09.06 - 09.12	895	1060	E20-20-013-01-22	A, 18, 20, 68			45-50	35					F21-20-013-01-VA	F21-20-013-01-HA	ABE
116 d, 118 d, 120 d, 123 d, 130 i	09.06 - 09.12	920	1060	E20-20-013-02-22	A, 18, 20, 68			45-50	35					F21-20-013-02-VA	F21-20-013-01-HA	ABE
Anti-Roll-Kit (Performance Stabilisatoren | *Performance Sway Bars*)																
116 d, 116 i, 118 d, 118 i, 120 d, 120 i, 123 d, 130 i	09.06 - 09.12			E40-20-013-01-11	A, 18, 20, 22, 45					28	15	nicht verstellbar *not adjustable*	nicht verstellbar *not adjustable*	AS41-20-013-01-VA	AS41-20-013-01-HA	T
B12 Pro-Kit (Performance Komplettfahrwerke | *Performance Springs+Shocks*)																
116 i, 118 i, 120 i	09.06 - 09.12	875	1060	E90-20-013-01-22	A, 18, 20, 68, 78, 161			30	25					F11-20-013-01-VA	F11-20-013-01-HA	T
116 d, 118 d, 120 d, 123 d, 130 i	09.06 - 09.12	920	1060	E90-20-013-02-22	A, 18, 20, 68, 78, 161			30	25					F11-20-013-02-VA	F11-20-013-01-HA	T
B12 Sportline (Performance Komplettfahrwerke Sport | *Sport Performance Springs+Shocks*)																
116 i, 118 i, 120 i	09.06 - 09.12	895	1060	E95-20-013-01-22	A, 18, 20, 68, 78, 161			45-50	35					F21-20-013-01-VA	F21-20-013-01-HA	ABE
116 d, 118 d, 120 d, 123 d, 130 i	09.06 - 09.12	920	1060	E95-20-013-02-22	A, 18, 20, 68, 78, 161			45-50	35					F21-20-013-02-VA	F21-20-013-01-HA	ABE
Pro-Street-S (Gewindefahrwerke - höhenverstellbar | *Coil-Overs-Adjustable Ride Hight*)																
116 d, 116 i, 118 d, 118 i, 120 d, 120 i, 123 d, 130 i	09.06 - 09.12	945	1070	PSS65-20-013-01-22	A, 18, 20, 24, 25, 45, 160			35-65	35-65							T
1 (F20)																
Pro-Kit (Performance Fahrwerksfedern | *Performance Springs*)																
114 i, 116 i, 118 i, 120 i, 125 i, 114 d, 116 d, 118 d, 120 d, 125 d	11.10 -	905	1160	E10-20-030-01-22	A, 18, 20			25	30					F11-20-030-01-VA	F11-20-030-01-HA	ABE
118 d xDrive, 120 d xDrive	02.12 -	975	1160	E10-20-030-02-22	A, 18			15	25					F11-20-031-02-VA	F11-20-030-01-HA	ABE
125 d	08.11 -	975	1160	E10-20-030-02-22	A, 18			25	30					F11-20-031-02-VA	F11-20-030-01-HA	ABE
M 135 i	11.11 -	975	1160	E10-20-030-02-22	A, 18, 20			25	15					F11-20-031-02-VA	F11-20-030-01-HA	ABE
M 135 i xDrive	02.12 -	1035	1120	E10-20-030-03-22	A, 18			15	15					F11-20-030-03-VA	F11-20-030-01-HA	ABE
Sportline (Performance Fahrwerksfedern Sport | *Sport Performance Springs*)																
114 i, 116 i, 118 i, 120 i, 125 i, 114 d, 116 d, 118 d, 120 d, 125 d	11.10 -	920	1160	E20-20-030-01-22	A, 18, 20			40	40					F21-20-030-01-VA	F21-20-030-01-HA	T
Anti-Roll-Kit (Performance Stabilisatoren | *Performance Sway Bars*)																
114 i, 116 i, 118 i, 120 i, 125 i, 114 d, 116 d, 118 d, 120 d, 125 d	11.10 -			E40-20-031-02-11	A, 18, 20, 22, 45					28 Rohr *28 tube*	16	2-fach verstellbar *2-way adjustable*	nicht verstellbar *not adjustable*	AS41-20-031-02-VA	AS41-20-031-01-HA	T
Pro-Tronic (Elektronische Performance Fahrwerksmodule | *Electronic Performance Suspension Moduls*)																
Alle Motorisierungen / *all motorisation*	11.10 -			AM65-20-030-01-22	A, 175											
B12 Pro-Kit (Performance Komplettfahrwerke | *Performance Springs+Shocks*)																
114 i, 116 i, 118 i, 120 i, 125 i, 114 d, 116 d, 118 d, 120 d, 125 d	11.10 -	905	1120	E90-20-030-01-22	A, 18, 20, 78, 161			25	30					F11-20-030-01-VA	F11-20-030-01-HA	ABE
125 d	08.11 -	970	1120	E90-20-030-02-22	A, 18, 20, 78, 161			25	30					F11-20-031-02-VA	F11-20-030-01-HA	ABE
M 135 i	11.11 -	970	1120	E90-20-030-02-22	A, 18, 20, 78, 161			25	15					F11-20-031-02-VA	F11-20-030-01-HA	ABE
M 135 i xDrive	02.12 -	1020	1120	E90-20-030-03-22	A, 18, 78, 161			15	15					F11-20-031-02-VA	F11-20-030-01-HA	ABE
118 d xDrive, 120 d xDrive	02.12 -	970	1120	E90-20-030-04-22	A, 18, 78, 161			15	25					F11-20-031-02-VA	F11-20-030-01-HA	ABE
B12 Sportline (Performance Komplettfahrwerke Sport | *Sport Performance Springs+Shocks*)																
114 i, 116 i, 118 i, 120 i, 125 i, 114 d, 116 d, 118 d, 120 d, 125 d	11.10 -	905	1090	E95-20-030-01-22	A, 18, 20, 78, 161			40	40					F21-20-030-01-VA	F21-20-030-01-HA	T
Pro-Street-S (Gewindefahrwerke - höhenverstellbar | *Coil-Overs-Adjustable Ride Hight*)																
114 i, 116 i, 118 i, 120 i, 125 i, 114 d, 116 d, 118 d, 120 d, 125 d	11.10 -	920	1230	PSS65-20-031-01-22	A, 18, 20, 21, 24, 25, 45, 160			25-50	30-55							T
114 i, 116 i, 118 i, 120 i, 125 i, 114 d, 116 d, 118 d, 120 d, 125 d	11.10 -	1090	1230	PSS65-20-031-02-22	A, 18, 20, 21, 24, 25, 45, 160			25-50	30-55							T
M 135 i	11.11 -	1090	1230	PSS65-20-031-02-22	A, 18, 20, 21, 24, 25, 45, 160			25-50	30-55							T

BMW

Modell *Model*	Baujahr *Year*	Achslast Vorne kg *Front Axle Load kg*	Achslast Hinten kg *Rear Axle Load kg*	Artikel-Nr. *Part-No.*	Hinweise *Notes*	ab Nachtrag ...xx BE *from suppl. ...xx of type approval*	bis Nachtrag ...xx BE *to suppl. ...xx of type approval*	ca. Tieferl. Vorne mm *ca. Lowering Front mm*	ca. Tieferl. Hinten mm *ca. Lowering Rear mm*	Ø Vorne mm *Ø Front mm*	Ø Hinten mm *Ø Rear mm*	Verstellbarkeit Vorne *Adjustable Front*	Verstellbarkeit Hinten *Adjustable Rear*	Ersatzteilbez. Vorne *Spare Part Marking Front*	Ersatzteilbez. Hinten *Spare Part Marking Rear*	Gutachten *Homologation*
1 (F20)																
Pro-Street-S (Gewindefahrwerke - höhenverstellbar | *Coil-Overs-Adjustable Ride Hight*)																
114 i, 116 i, 118 i, 120 i, 125 i, 114 d, 116 d, 118 d, 120 d, 125 d	11.10 -	920	1230	PSS65-20-031-03-22	A, 18, 20, 24, 25, 45, 160, 176			25-50	30-55							T
114 i, 116 i, 118 i, 120 i, 125 i, 114 d, 116 d, 118 d, 120 d, 125 d	11.10 -	1090	1230	PSS65-20-031-04-22	A, 18, 20, 24, 25, 45, 160, 176			25-50	30-55							T
M 135 i	11.11 -	1090	1230	PSS65-20-031-04-22	A, 18, 20, 24, 25, 45, 160, 176			25-50	30-55							T
118 d xDrive, 120 d xDrive	11.10 -	1000	1120	PSS65-20-031-05-22	A, 18, 24, 25, 45, 160, 177			30-55	30-55							T
118 d xDrive, 120 d xDrive	11.10 -	1020	1120	PSS65-20-031-06-22	A, 18, 24, 25, 45, 160, 177			30-55	30-55							T
M 135 i xDrive	02.12 -	1020	1120	PSS65-20-031-06-22	A, 18, 24, 25, 45, 160, 177			30-55	30-55							T
1 (F21)																
Pro-Kit (Performance Fahrwerksfedern | *Performance Springs*)																
114 i, 116 i, 118 i, 120 i, 125 i, 114 d, 116 d, 118 d, 120 d, 125 d	12.11 -	905	1160	E10-20-030-01-22	A, 18, 20			25	30					F11-20-030-01-VA	F11-20-030-01-HA	ABE
118 d xDrive, 120 d xDrive	02.12 -	975	1160	E10-20-030-02-22	A, 18			25	25					F11-20-031-02-VA	F11-20-030-01-HA	ABE
125 d	12.11 -	975	1160	E10-20-030-02-22	A, 18			25	30					F11-20-031-02-VA	F11-20-030-01-HA	ABE
M 135 i	12.11 -	975	1160	E10-20-030-02-22	A, 18, 20			25	15					F11-20-031-02-VA	F11-20-030-01-HA	ABE
M 135 i xDrive	02.12 -	1035	1120	E10-20-030-03-22	A, 18			15	15					F11-20-030-03-VA	F11-20-030-01-HA	ABE
Sportline (Performance Fahrwerksfedern Sport | *Sport Performance Springs*)																
114 i, 116 i, 118 i, 120 i, 125 i, 114 d, 116 d, 118 d, 120 d, 125 d	12.11 -	920	1160	E20-20-030-01-22	A, 18, 20			40	40					F21-20-030-01-VA	F21-20-030-01-HA	T
Anti-Roll-Kit (Performance Stabilisatoren | *Performance Sway Bars*)																
114 i, 116 i, 118 i, 120 i, 125 i, 114 d, 116 d, 118 d, 120 d, 125 d	12.11 -			E40-20-031-02-11	A, 18, 20, 22, 45					28 Rohr *28 tube*	16	2-fach verstellbar *2-way adjustable*	nicht verstellbar *not adjustable*	AS41-20-031-02-VA	AS41-20-031-01-HA	T
Pro-Tronic (Elektronische Performance Fahrwerksmodule | *Electronic Performance Suspension Moduls*)																
Alle Motorisierungen / *all motorisation*	12.11 -			AM65-20-030-01-22	A, 175											
B12 Pro-Kit (Performance Komplettfahrwerke | *Performance Springs+Shocks*)																
114 i, 116 i, 118 i, 120 i, 125 i, 114 d, 116 d, 118 d, 120 d, 125 d	12.11 -	905	1120	E90-20-030-01-22	A, 18, 20, 78, 161			25	30					F11-20-030-01-VA	F11-20-030-01-HA	ABE
125 d	12.11 -	970	1120	E90-20-030-02-22	A, 18, 20, 78, 161			25	30					F11-20-031-02-VA	F11-20-030-01-HA	ABE
M 135 i	12.11 -	970	1120	E90-20-030-02-22	A, 18, 20, 78, 161			25	15					F11-20-031-02-VA	F11-20-030-01-HA	ABE
M 135 i xDrive	02.12 -	1020	1120	E90-20-030-03-22	A, 18, 78, 161			15	15					F11-20-031-02-VA	F11-20-030-01-HA	ABE
118 d xDrive, 120 d xDrive	02.12 -	970	1120	E90-20-030-04-22	A, 18, 78, 161			25	25					F11-20-031-02-VA	F11-20-030-01-HA	ABE
B12 Sportline (Performance Komplettfahrwerke Sport | *Sport Performance Springs+Shocks*)																
114 i, 116 i, 118 i, 120 i, 125 i, 114 d, 116 d, 118 d, 120 d, 125 d	11.10 -	920	1120	E95-20-030-01-22	A, 18, 20, 78, 161			40	40					F21-20-030-01-VA	F21-20-030-01-HA	T
Pro-Street-S (Gewindefahrwerke - höhenverstellbar | *Coil-Overs-Adjustable Ride Hight*)																
114 i, 116 i, 118 i, 120 i, 125 i, 114 d, 116 d, 118 d, 120 d, 125 d	11.10 -	920	1230	PSS65-20-031-01-22	A, 18, 20, 21, 24, 25, 45, 160			25-50	30-55							T
114 i, 116 i, 118 i, 120 i, 125 i, 114 d, 116 d, 118 d, 120 d, 125 d	11.10 -	1090	1230	PSS65-20-031-02-22	A, 18, 20, 21, 24, 25, 45, 160			25-50	30-55							T
M 135 i	11.11 -	1090	1230	PSS65-20-031-02-22	A, 18, 20, 21, 24, 25, 45, 160			25-50	30-55							T
114 i, 116 i, 118 i, 120 i, 125 i, 114 d, 116 d, 118 d, 120 d, 125 d	11.10 -	920	1230	PSS65-20-031-03-22	A, 18, 20, 24, 25, 45, 160, 176			25-50	30-55							T
114 i, 116 i, 118 i, 120 i, 125 i, 114 d, 116 d, 118 d, 120 d, 125 d	11.10 -	1090	1230	PSS65-20-031-04-22	A, 18, 20, 24, 25, 45, 160, 176			25-50	30-55							T
M 135 i	11.11 -	1090	1230	PSS65-20-031-04-22	A, 18, 20, 24, 25, 45, 160, 176			25-50	30-55							T
118 d xDrive, 120 d xDrive	11.11 -	1000	1120	PSS65-20-031-05-22	A, 18, 24, 25, 45, 160, 177			30-55	30-55							T
118 d xDrive, 120 d xDrive	11.11 -	1020	1120	PSS65-20-031-06-22	A, 18, 24, 25, 45, 160, 177			30-55	30-55							T
M 135 i xDrive	02.12 -	1020	1120	PSS65-20-031-06-22	A, 18, 24, 25, 45, 160, 177			30-55	30-55							T
1 Cabriolet (E88) ***1 Convertible (E88)***																
Pro-Kit (Performance Fahrwerksfedern | *Performance Springs*)																
118 i, 120 i, 125 i, 135 i, 128 i, 118 d, 120 d, 123 d	03.08 -	945	1120	E10-20-016-02-22	A, 18, 20			30	30					F11-20-013-01-VA	F11-20-014-01-HA	T
Anti-Roll-Kit (Performance Stabilisatoren | *Performance Sway Bars*)																
118 i, 120 i, 125 i, 135 i, 128 i, 118 d, 120 d, 123 d	03.08 -			E40-20-013-01-11	A, 18, 20, 22, 45					28	15	nicht verstellbar *not adjustable*	nicht verstellbar *not adjustable*	AS41-20-013-01-VA	AS41-20-013-01-HA	T
B12 Pro-Kit (Performance Komplettfahrwerke | *Performance Springs+Shocks*)																
118 i, 120 i, 125 i, 135 i, 128 i, 118 d, 120 d, 123 d	03.08 -	945	1120	E90-20-016-02-22	A, 18, 20, 78, 161			30	30					F11-20-013-01-VA	F11-20-014-01-HA	T
Pro-Street-S (Gewindefahrwerke - höhenverstellbar | *Coil-Overs-Adjustable Ride Hight*)																
118 i, 120 i, 125 i, 135 i, 128 i, 118 d, 120 d, 123 d	03.08 -	960	1115	PSS65-20-013-01-22	A, 18, 20, 24, 25, 45, 160			30-55	25-50							T
118 i, 120 i, 125 i, 135 i, 128 i, 118 d, 120 d, 123 d	03.08 -	960	1115	PSS65-20-013-13-22	A, 18, 20, 24, 25, 45, 160			30-55	25-50							T
1 Coupe (E82)																
Pro-Kit (Performance Fahrwerksfedern | *Performance Springs*)																
M	04.11 - 06.12	940	1030	E10-20-016-03-22	A, 18, 20			25	10					F11-20-016-03-VA	F11-20-016-03-HA	T
118 d, 120 d, 120 i, 123 d, 125 i, 135 i	10.07 -	945	1030	E10-20-016-01-22	A, 18, 20			30-35	30-35					F11-20-013-01-VA	F11-20-016-01-HA	T

BMW

Modell *Model*	Baujahr *Year*	Achslast Vorne kg *Front Axle Load kg*	Achslast Hinten kg *Rear Axle Load kg*	Artikel-Nr. *Part-No.*	Hinweise *Notes*	ab Nachtrag ...xx BE *from suppl. ...xx of type approval*	bis Nachtrag ...xx BE *to suppl. ...xx of type approval*	ca. Tieferl. Vorne mm *ca. Lowering Front mm*	ca. Tieferl. Hinten mm *ca. Lowering Rear mm*	Ø Vorne mm *Ø Front mm*	Ø Hinten mm *Ø Rear mm*	Verstellbarkeit Vorne *Adjustable Front*	Verstellbarkeit Hinten *Adjustable Rear*	Ersatzteilbez. Vorne *Spare Part Marking Front*	Ersatzteilbez. Hinten *Spare Part Marking Rear*	Gutachten *Homologation*
1 Coupe (E82)																
Anti-Roll-Kit (Performance Stabilisatoren | *Performance Sway Bars*)																
118 d, 120 d, 120 i, 123 d, 125 i, 135 i	10.07 -			E40-20-013-01-11	A, 18, 20, 22, 45					28	15	nicht verstellbar *not adjustable*	nicht verstellbar *not adjustable*	AS41-20-013-01-VA	AS41-20-013-01-HA	T
B12 Pro-Kit (Performance Komplettfahrwerke | *Performance Springs+Shocks*)																
118 d, 120 d, 123 d, 125 i, 135 i	10.07 -	945	1030	E90-20-016-01-22	A, 18, 20, 78, 161			30-35	30-35					F11-20-013-01-VA	F11-20-016-01-HA	T
Pro-Street-S (Gewindefahrwerke - höhenverstellbar | *Coil-Overs-Adjustable Ride Hight*)																
118 d, 120 d, 120 i, 123 d, 125 i, 135 i	10.07 -	945	1070	PSS65-20-013-01-22	A, 18, 20, 24, 25, 45, 160			35-65	35-65							T
2 Active Tourer (F45)																
Pro-Kit (Performance Fahrwerksfedern | *Performance Springs*)																
216 i, 218 i, 220 i, 214 d, 216 d, 218 d	09.14 -	1025	1040	E10-20-033-01-22	A, 18, 20	14		20-25	25					F11-20-033-01-FA	F11-20-033-01-RA	T
220 i, 225 i, 218 d, 220 d	09.14 -	1080	1040	E10-20-033-02-22	A, 18, 20	14		20-25	25					F11-20-031-06-VA	F11-20-033-01-RA	T
225 i xDrive, 220 d xDrive	09.14 -	1105	980	E10-20-033-03-22	A, 18	14		30	30					F11-20-033-03-FA	F11-20-033-03-RA	T
2 Cabriolet (F23) ***2 Convertible (F23)***																
Pro-Kit (Performance Fahrwerksfedern | *Performance Springs*)																
218 i, 220 i, 228 i, 218 d, 220 d	11.14 -	905	1160	E10-20-030-01-22	A, 18, 20			30	20					F11-20-030-01-VA	F11-20-030-01-HA	T
225 d	11.14 -	975	1160	E10-20-030-02-22	A, 18, 20			30	20					F11-20-031-02-VA	F11-20-030-01-HA	T
M 235 i	11.14 -	975	1160	E10-20-030-02-22	A, 18, 20			20	20					F11-20-031-02-VA	F11-20-030-01-HA	T
M 235 i xDrive	11.14 -	1035	1120	E10-20-030-03-22	A, 18			15	10					F11-20-030-03-VA	F11-20-030-01-HA	T
Sportline (Performance Fahrwerksfedern Sport | *Sport Performance Springs*)																
218 i, 220 i, 228 i, 218 d, 220 d	11.14 -	920	1160	E20-20-030-01-22	A, 18, 20			40	35					F21-20-030-01-VA	F21-20-030-01-HA	T
Anti-Roll-Kit (Performance Stabilisatoren | *Performance Sway Bars*)																
218 i, 220 i, 228 i, 218 d, 220 d	11.14 -			E40-20-031-02-11	A, 18, 20, 22, 45					28 Rohr *28 tube*	16	2-fach verstellbar *2-way adjustable*	nicht verstellbar *2-way adjustable*	AS41-20-031-02-VA	AS41-20-031-01-HA	T
B12 Pro-Kit (Performance Komplettfahrwerke | *Performance Springs+Shocks*)																
218 i, 220 i, 228 i, 218 d, 220 d	11.14 -	905	1160	E90-20-030-01-22	A, 18, 20, 78, 161			30	20					F11-20-030-01-VA	F11-20-030-01-HA	T
225 d	11.14 -	975	1160	E90-20-030-02-22	A, 18, 20, 78, 161			30	20					F11-20-031-02-VA	F11-20-030-01-HA	T
M 235i	11.14 -	975	1160	E90-20-030-02-22	A, 18, 20, 78, 161			20	10					F11-20-031-02-VA	F11-20-030-01-HA	T
B12 Sportline (Performance Komplettfahrwerke Sport | *Sport Performance Springs+Shocks*)																
218 i, 220 i, 228 i, 218 d, 220 d	11.14 -	920	1160	E95-20-030-01-22	A, 18, 20, 78, 161			40	35					F21-20-030-01-VA	F21-20-030-01-HA	T
2 Coupe (F22)																
Pro-Kit (Performance Fahrwerksfedern | *Performance Springs*)																
218 i, 220 i, 228 i, 218 d, 220 d	10.13 -	905	1160	E10-20-030-01-22	A, 18, 20			30	20					F11-20-030-01-VA	F11-20-030-01-HA	T
225 d, 220 d xDrive	10.13 -	975	1160	E10-20-030-02-22	A, 18, 20			30	20					F11-20-031-02-VA	F11-20-030-01-HA	T
M 235 i	10.13 -	975	1160	E10-20-030-02-22	A, 18, 20			20	10					F11-20-031-02-VA	F11-20-030-01-HA	T
M 235 i xDrive	10.13 -	1035	1120	E10-20-030-03-22	A, 18			15	10					F11-20-030-03-VA	F11-20-030-01-HA	T
Sportline (Performance Fahrwerksfedern Sport | *Sport Performance Springs*)																
218 i, 220 i, 228 i, 218 d, 220 d, 225 d	10.13 -	920	1160	E20-20-030-01-22	A, 18, 20			40	30					F21-20-030-01-VA	F21-20-030-01-HA	T
Anti-Roll-Kit (Performance Stabilisatoren | *Performance Sway Bars*)																
218 i, 220 i, 228 i, 218 d, 220 d, 225 d	10.13 -			E40-20-031-02-11	A, 18, 20, 22, 45					28 Rohr *28 tube*	16	2-fach verstellbar *2-way adjustable*	nicht verstellbar *2-way adjustable*	AS41-20-031-02-VA	AS41-20-031-01-HA	T
Pro-Tronic (Elektronische Performance Fahrwerksmodule | *Electronic Performance Suspension Moduls*)																
Alle Motorisierungen / *all motorisation*	10.13 -			AM65-20-030-01-22	A, 175											
B12 Pro-Kit (Performance Komplettfahrwerke | *Performance Springs+Shocks*)																
218 i, 220 i, 228 i, 218 d, 220 d	10.13 -	905	1160	E90-20-030-01-22	A, 18, 20, 78, 161			30	20					F11-20-030-01-VA	F11-20-030-01-HA	T
225 d	10.13 -	975	1160	E90-20-030-02-22	A, 18, 20, 78, 161			30	20					F11-20-031-02-VA	F11-20-030-01-HA	T
M 235 i	10.13 -	975	1160	E90-20-030-02-22	A, 18, 20, 78, 161			20	10					F11-20-031-02-VA	F11-20-030-01-HA	T
B12 Sportline (Performance Komplettfahrwerke Sport | *Sport Performance Springs+Shocks*)																
218 i, 220 i, 228 i, 218 d, 220 d, 225 d	10.13 -	920	1160	E95-20-030-01-22	A, 18, 20, 78, 161			40	30					F21-20-030-01-VA	F21-20-030-01-HA	T
Pro-Street-S (Gewindefahrwerke - höhenverstellbar | *Coil-Overs-Adjustable Ride Hight*)																
218 i, 220 i, 228 i, 218 d, 220 d	10.13 -	920	1230	PSS65-20-031-01-22	A, 18, 20, 21, 24, 25, 45, 101, 160			25-50	30-55							T
225 d	10.13 -	1090	1230	PSS65-20-031-02-22	A, 18, 20, 21, 24, 25, 45, 101, 160			25-50	30-55							T
M 235 i	10.13 -	1090	1230	PSS65-20-031-02-22	A, 18, 20, 21, 24, 25, 45, 101, 160			25-50	30-55							T
218 i, 220 i, 228 i, 218 d, 220 d	10.13 -	920	1230	PSS65-20-031-03-22	A, 18, 20, 25, 45, 101, 160, 176			25-50	30-55							T
225 d	10.13 -	1090	1230	PSS65-20-031-04-22	A, 18, 20, 25, 45, 101, 160, 176			25-50	30-55							T
M 235 i	10.13 -	1090	1230	PSS65-20-031-04-22	A, 18, 20, 25, 45, 101, 160, 176			25-50	30-55							T
220 d xDrive, 228 i xDrive	10.13 -	1000	1120	PSS65-20-031-05-22	A, 18, 25, 45, 101, 160, 177			30-55	30-55							T
220 d xDrive, 228 i xDrive	10.13 -	1020	1120	PSS65-20-031-06-22	A, 18, 25, 45, 101, 160, 177			30-55	30-55							T
M 235 i xDrive	07.14 -	1020	1120	PSS65-20-031-06-22	A, 18, 25, 45, 101, 160, 177			30-55	30-55							T

BMW

Modell *Model*	Baujahr *Year*	Achslast Vorne kg *Front Axle Load kg*	Achslast Hinten kg *Rear Axle Load kg*	Artikel-Nr. *Part-No.*	Hinweise *Notes*	ab Nachtrag ...xx BE *from suppl. ...xx of type approval*	bis Nachtrag ...xx BE *to suppl. ...xx of type approval*	ca. Tieferl. Vorne mm *ca. Lowering Front mm*	ca. Tieferl. Hinten mm *ca. Lowering Rear mm*	Ø Vorne mm *Ø Front mm*	Ø Hinten mm *Ø Rear mm*	Verstellbarkeit Vorne *Adjustable Front*	Verstellbarkeit Hinten *Adjustable Rear*	Ersatzteilbez. Vorne *Spare Part Marking Front*	Ersatzteilbez. Hinten *Spare Part Marking Rear*	Gutachten *Homologation*
3 (E30)																
Pro-Kit (Performance Fahrwerksfedern | *Performance Springs*)																
316 i, 318 i, 318 is	09.82 - 08.91	805	905	E2003-240	A, 18, 20			30-40	30					F2003201	F2003102	T
320 i, 323 i, 325 e 2.7, 325 i	09.82 - 06.91	825	905	E2003-140	A, 18, 20			30-40	30					F2003001	F2003102	T
320 i, 324 d, 324 td, 325 i	09.83 - 08.91	865	945	E2019-140	A, 18, 20			30-40	30					F2019001	F2019002	T
Anti-Roll-Kit (Performance Stabilisatoren | *Performance Sway Bars*)																
316 i, 318 i, 318 is, 320 i, 323 i, 324 d, 324 td, 325 e 2.7	09.82 - 08.91			E2003-320	A, 18, 20, 22, 45					20	16	3-fach verstellbar *3-way adjustable*	3-fach verstellbar *3-way adjustable*	AS2003320VA	AS2003320HA	T
B12 Pro-Kit (Performance Komplettfahrwerke | *Performance Springs+Shocks*)																
316 i, 318 i, 318 is	09.82 - 08.91	805	905	E90-20-007-01-22	A, 18, 20, 77, 78, 161			30-40	30					F2003201	F2003102	T
316 i, 318 i, 318 is	09.82 - 08.91	805	905	E90-20-007-02-22	A, 18, 20, 78, 161			30-40	30					F2003201	F2003102	T
320 i, 323 i	09.82 - 06.91	825	905	E90-20-007-03-22	A, 18, 20, 77, 78, 161			30-40	30					F2003001	F2003102	T
320 i, 323 i, 325 e 2.7, 325 i	09.82 - 06.91	825	905	E90-20-007-04-22	A, 18, 20, 78, 161			30-40	30					F2003001	F2003102	T
320 i, 323 i, 324 d, 324 td, 325 e 2.7, 325 i	09.82 - 08.91	865	905	E90-20-007-06-22	A, 18, 20, 78, 161			30-40	30					F2019001	F2019002	T
320 i	09.82 - 06.91	865	945	E90-20-007-05-22	A, 18, 20, 77, 78, 161			30-40	30					F2019001	F2019002	T
3 (E36)																
Pro-Kit (Performance Fahrwerksfedern | *Performance Springs*)																
316 i, 318 i, 318 is	09.90 - 02.98	830	1070	E2021-240	A, 18, 20, 68			30	30					F2021101	F2021002	ABE
320 i, 325 i, 325 td	09.90 - 02.98	890	1070	E2021-140	A, 18, 20, 68			30	30					F2021001	F2021002	ABE
318 tds, 320 i, 323 i 2.5, 325 i, 325 td, 325 tds, 328 i	09.90 - 02.98	900	1070	E2033-140	A, 18, 20, 68			35	30					F2033001	F2021002	ABE
M3 3.0	08.94 - 09.95	910	1090	E2041-140	A, 18, 20			25	15					F2019001	F2021002	T
M3 3.2	09.95 - 02.98	920	1130	E2059-140	A, 18, 20			25	15					F2059001	F2042002	T
Sportline (Performance Fahrwerksfedern Sport | *Sport Performance Springs*)																
316 i, 318 i, 318 is	09.90 - 02.98	830	1070	E20-20-004-01-22	A, 18, 20, 68			45-50	30					F21-20-004-01-VA	F21-20-004-02-HA	T
318 tds, 320 i, 323 i 2.5, 325 i, 325 td, 325 tds, 328 i	09.90 - 02.98	900	1070	E20-20-004-02-22	A, 18, 20, 68			45-50	30					F21-20-004-02-VA	F21-20-004-02-HA	T
Anti-Roll-Kit (Performance Stabilisatoren | *Performance Sway Bars*)																
316 i, 318 i, 318 is, 318 tds, 320 i, 323 i 2.5, 325 i, 325 td, 325 tds, 328 i	11.91 - 02.98			E2021-321	A, 18, 20, 22, 45					28	21	2-fach verstellbar *2-way adjustable*	2-fach verstellbar *2-way adjustable*	AS2021321VA	AS2021320HA	T
B12 Pro-Kit (Performance Komplettfahrwerke | *Performance Springs+Shocks*)																
316 i, 318 i	09.90 - 05.92	830	1070	E90-20-004-01-22	A, 18, 20, 68, 78, 161			30	30					F2021101	F2021002	ABE
316 i, 318 i, 318 is	06.92 - 02.98	830	1070	E90-20-004-02-22	A, 18, 20, 68, 78, 161			30	30					F2021101	F2021002	ABE
320 i, 325 i, 325 td	09.90 - 05.92	890	1070	E90-20-004-03-22	A, 18, 20, 68, 78, 161			30	30					F2033001	F2021002	ABE
318 tds, 320 i, 323 i 2.5, 325 i, 325 td, 325 tds, 328 i	06.92 - 02.98	900	1070	E90-20-004-04-22	A, 18, 20, 68, 78, 161			30	30					F2033001	F2021002	ABE
M3 3.0	08.94 - 09.95	910	1090	E90-20-004-11-22	A, 18, 20, 78, 79, 161			25	15					F2019001	F2021002	T
M3 3.2	09.95 - 02.98	920	1130	E90-20-004-12-22	A, 18, 20, 78, 79, 161			25	15					F2059001	F2042002	T
B12 Sportline (Performance Komplettfahrwerke Sport | *Sport Performance Springs+Shocks*)																
316 i, 318 i - alle Schaltgetriebe *316 i, 318 i - all manual transmission*	09.90 - 05.92	830	1070	E95-20-004-01-22	A, 18, 20, 68, 78, 161			45-50	30					F21-20-004-01-VA	F21-20-004-02-HA	T
316 i, 318 i, 318 is - alle Schaltgetriebe *316 i, 318 i, 318 is - all manual transmission*	06.92 - 02.98	830	1070	E95-20-004-02-22	A, 18, 20, 68, 78, 161			45-50	30					F21-20-004-01-VA	F21-20-004-02-HA	T
320 i, 325 i, 325 td	09.90 - 05.92	900	1070	E95-20-004-03-22	A, 18, 20, 68, 78, 161			45-50	30					F21-20-004-02-VA	F21-20-004-02-HA	T
318 tds, 320 i, 323 i 2.5, 325 i, 325 td, 325 tds, 328i	06.92 - 02.98	900	1070	E95-20-004-04-22	A, 18, 20, 68, 78, 161			45-50	30					F21-20-004-02-VA	F21-20-004-02-HA	T
Pro-Street-S (Gewindefahrwerke - höhenverstellbar | *Coil-Overs-Adjustable Ride Hight*)																
316 i, 318 i, 318 is, 318 tds, 320 i, 323 i 2.5, 325 i, 325 td, 325 tds, 328 i	06.92 - 02.98	890	1150	PSS65-20-004-01-22	A, 18, 24, 25, 45, 160			40-80	40-80							T
M3 3.0, M3 3.2	10.92 - 04.99	920	1130	PSS65-20-004-02-22	A, 18, 24, 25, 45, 160			30-60	30-60							T
3 (E46)																
Pro-Kit (Performance Fahrwerksfedern | *Performance Springs*)																
316 i, 318 i	02.98 - 02.05	895	1100	E2066-140	A, 18, 20, 68			30	20-25					F2066001	F2067102	T
318 d, 320 d, 320 i, 323 i, 325 i, 328 i, 330 i	02.98 - 04.05	970	1100	E2067-140	A, 18, 20, 68			30	20-25					F2067001	F2067102	T
325 xi, 330 xi	06.00 - 02.05	1010	1250	E10-20-001-03-22	A, 18			30	20-25					F2067001	F2067102	T
330 d	10.99 - 02.05	1030	1100	E10-20-001-01-22	A, 18, 20, 68			30	20-25					F11-20-001-01-VA	F2067102	T
330 xd	06.00 - 02.05	1065	1250	E10-20-001-04-22	A, 18			30	20-25					F11-20-001-01-VA	F2067102	T
Sportline (Performance Fahrwerksfedern Sport | *Sport Performance Springs*)																
316 i, 318 i	02.98 - 02.05	895	1045	E20-20-001-01-22	A, 18, 20, 68			45-50	30					F21-20-001-01-VA	F21-20-001-01-HA	T
318 d, 320 d, 320 i, 323 i, 325 i, 328 i, 330 i	02.98 - 04.05	935	1190	E20-20-001-03-22	A, 18, 20, 68			45-50	20-25					F21-20-001-02-VA	F21-20-001-02-HA	T
Anti-Roll-Kit (Performance Stabilisatoren | *Performance Sway Bars*)																
316 i, 318 d, 318 i, 320 d, 320 i, 323 i, 325 i, 328 i, 330 d, 330 i	02.98 - 04.05			E2066-320	A, 18, 20, 22, 45					27	21	2-fach verstellbar *2-way adjustable*	nicht verstellbar *not adjustable*	AS2066320VA	AS2066320HA	T
B12 Pro-Kit (Performance Komplettfahrwerke | *Performance Springs+Shocks*)																
316 i, 318 i	02.98 - 02.05	895	1190	E90-20-001-01-22	A, 18, 20, 68, 78, 161			30	20-25					F2066001	F2067102	T
318 d, 320 d, 320 i, 323 i, 325 i, 328 i, 330 i	02.98 - 04.05	970	1190	E90-20-001-02-22	A, 18, 20, 68, 78, 161			30	20-25					F2067001	F2067102	T
325 xi, 330 xi	06.00 - 02.05	1010	1250	E90-20-001-05-22	A, 18, 74, 78, 161			30	20-25					F2067001	F2067102	T
330 d	10.99 - 02.05	1030	1190	E90-20-001-03-22	A, 18, 20, 68, 78, 161			30	20-25					F11-20-001-01-VA	F2067102	T
330 xd	06.00 - 02.05	1065	1250	E90-20-001-06-22	A, 18, 74, 78, 161			30	20-25					F11-20-001-01-VA	F2067102	T

Modell *Model*	Baujahr *Year*	Achslast Vorne kg *Front Axle Load kg*	Achslast Hinten kg *Rear Axle Load kg*	Artikel-Nr. *Part-No.*	Hinweise *Notes*	ab Nachtrag ...xx BE *from suppl. ...xx of type approval*	bis Nachtrag ...xx BE *to suppl. ...xx of type approval*	ca. Tieferl. Vorne mm *ca. Lowering Front mm*	ca. Tieferl. Hinten mm *ca. Lowering Rear mm*	Ø Vorne mm *Ø Front mm*	Ø Hinten mm *Ø Rear mm*	Verstellbarkeit Vorne *Adjustable Front*	Verstellbarkeit Hinten *Adjustable Rear*	Ersatzteilbez. Vorne *Spare Part Marking Front*	Ersatzteilbez. Hinten *Spare Part Marking Rear*	Gutachten *Homologation*
3 (E46)																
B12 Sportline (Performance Komplettfahrwerke Sport | *Sport Performance Springs+Shocks*)																
316 i, 318 i	02.98 - 02.05	895	1045	E95-20-001-01-22	A, 18, 20, 68, 78, 161			45-50	20-25					F21-20-001-01-VA	F21-20-001-01-HA	T
318 d, 320 d, 320 i, 323 i, 325 i, 328 i	02.98 - 04.05	935	1190	E95-20-001-03-22	A, 18, 20, 68, 78, 161			45-50	20-25					F21-20-001-02-VA	F21-20-001-02-HA	T
330 i Schaltgetriebe *330 i manual transmission*	06.00 - 02.05	935	1190	E95-20-001-03-22	A, 18, 20, 68, 78, 161			45-50	20-25					F21-20-001-02-VA	F21-20-001-02-HA	T
Pro-Street-S (Gewindefahrwerke - höhenverstellbar | *Coil-Overs-Adjustable Ride Hight*)																
316 i, 318 d, 318 i, 320 d, 320 i, 323 i, 325 i, 328 i	02.98 - 04.05	910	1215	PSS65-20-001-01-22	A, 18, 20, 24, 25, 45, 160			40-75	40-75							T
316 i, 318 d, 318 i, 320 d, 320 i, 323 i, 325 i, 328 i, 330 d, 330 i	02.98 - 04.05	1000	1215	PSS65-20-001-02-22	A, 18, 20, 24, 25, 45, 160			40-75	40-75							T
3 (E90)																
Pro-Kit (Performance Fahrwerksfedern | *Performance Springs*)																
316 i, 318 i, 320 i, 320 si	01.05 - 12.11	935	1085	E10-20-014-01-22	A, 18, 20			30	25					F11-20-013-01-VA	F11-20-014-01-HA	ABE
316 d, 318 d, 320 d, 323 i, 325 i, 330 i	01.05 - 12.11	1045	1135	E10-20-014-02-22	A, 18, 20			30	25					F11-20-013-02-VA	F11-20-013-01-HA	ABE
320 d xDrive, 320 xd, 325 i xDrive, 325 xi, 330 i xDrive, 330 xi	01.05 - 12.11	1045	1200	E10-20-014-08-22	A, 18			30	15-20					F11-20-013-02-VA	F11-20-014-05-HA	ABE
M3 4.0	03.07 - 12.11	1060	1190	E10-20-014-17-22	A, 18, 20			20	15					F11-20-014-17-VA	F11-20-014-17-HA	T
325 d, 330 d	09.05 - 12.11	1090	1135	E10-20-014-04-22	A, 18, 20			30	25					F11-20-014-04-VA	F11-20-013-01-HA	ABE
335 d, 335 i	09.06 - 12.11	1090	1135	E10-20-014-04-22	A, 18, 20			20	0					F11-20-014-04-VA	F11-20-013-01-HA	ABE
330 d xDrive, 330 xd	09.05 - 12.11	1090	1200	E10-20-014-09-22	A, 18			30	15-20					F11-20-014-04-VA	F11-20-014-05-HA	ABE
Sportline (Performance Fahrwerksfedern Sport | *Sport Performance Springs*)																
316 i, 318 i, 320 i, 320 si	01.05 - 12.11	935	1085	E20-20-014-01-22	A, 18, 20			45-50	35					F21-20-013-01-VA	F21-20-014-01-HA	ABE
316 d, 318 d, 320 d, 323 i, 325 i, 330 i	01.05 - 12.11	955	1135	E20-20-014-02-22	A, 18, 20			45-50	35					F21-20-013-02-VA	F21-20-013-01-HA	ABE
Anti-Roll-Kit (Performance Stabilisatoren | *Performance Sway Bars*)																
316 i, 318 i, 320 i, 320 si, 323 i, 325 i, 328 i, 330 i, 335 i, 316 d, 318 d, 320 d, 325 d, 330 d, 335 d	01.05 - 12.11			E40-20-013-01-11	A, 18, 20, 22, 45					28	15	nicht verstellbar *not adjustable*	nicht verstellbar *not adjustable*	AS41-20-013-01-VA	AS41-20-013-01-HA	T
Pro-Tronic (Elektronische Performance Fahrwerksmodule | *Electronic Performance Suspension Moduls*)																
M3	03.07 -			AM65-20-014-17-22	A, 175											
B12 Pro-Kit (Performance Komplettfahrwerke | *Performance Springs+Shocks*)																
316 i, 318 i, 320 i, 320 si	01.05 - 12.11	935	1085	E90-20-014-01-22	A, 18, 20, 78, 161			30	25					F11-20-013-01-VA	F11-20-014-01-HA	ABE
316 d, 318 d, 320 d, 323 i, 325 i, 330 i	01.05 - 12.11	1045	1135	E90-20-014-02-22	A, 18, 20, 78, 161			30	25					F11-20-013-02-VA	F11-20-013-01-HA	ABE
320 d xDrive, 320 xd, 325 i xDrive, 325 xi, 330 i xDrive, 330 xi	01.05 - 12.11	1045	1200	E90-20-014-08-22	A, 18, 78, 161			30	15-20					F11-20-013-02-VA	F11-20-014-05-HA	ABE
M3 4.0	03.07 - 12.11	1060	1190	E90-20-014-17-22	A, 18, 20, 21, 78, 159, 161			20	15					F11-20-014-17-VA	F11-20-014-17-HA	T
325 d, 330 d, 335 d, 335 i	09.05 - 12.11	1090	1135	E90-20-014-04-22	A, 18, 20, 78, 161			20	0					F11-20-014-04-VA	F11-20-013-01-HA	ABE
330 d xDrive, 330 xd	09.05 - 12.11	1090	1200	E90-20-014-09-22	A, 18, 78, 161			30	15-20					F11-20-014-04-VA	F11-20-014-05-HA	ABE
B12 Sportline (Performance Komplettfahrwerke Sport | *Sport Performance Springs+Shocks*)																
316 i, 318 i, 320 i, 320 si	01.05 - 12.11	935	1085	E95-20-014-01-22	A, 18, 20, 78, 161			45-50	35					F21-20-013-01-VA	F21-20-014-01-HA	T
316 d, 318 d, 320 d, 323 i, 325 i, 330 i	01.05 - 12.11	955	1135	E95-20-014-02-22	A, 18, 20, 78, 161			45-50	35					F21-20-013-02-VA	F21-20-013-01-HA	T
Pro-Street-S (Gewindefahrwerke - höhenverstellbar | *Coil-Overs-Adjustable Ride Hight*)																
316 i, 318 i, 320 i, 323 i, 325 i, 328 i, 330 i, 320 d	01.05 - 12.11	1090	1135	PSS65-20-013-01-22	A, 18, 20, 24, 25, 45, 160			30-60	30-60							T
3 (F30, F35, F80)																
Pro-Kit (Performance Fahrwerksfedern | *Performance Springs*)																
316 i, 318 i, 320 i, 328 i, 330 i, 316 d, 318 d, 320 d, 325 d	10.11 -	965	1230	E10-20-031-01-22	A, 18, 20	05		25-30	25					F11-20-031-01-VA	F11-20-031-01-HA	T
318 d xDrive, 320 i xDrive	10.11 -	965	1280	E10-20-031-03-22	A, 18	05		20	15					F11-20-031-01-VA	F11-20-031-03-HA	T
335 i, 340 i, 325 d, 330 d	10.11 -	1010	1230	E10-20-031-02-22	A, 18, 20	05		35	40					F11-20-031-02-VA	F11-20-031-01-HA	T
320 i xDrive, 328 i xDrive, 330 i xDrive, 320 d xDrive	10.11 -	1010	1280	E10-20-031-04-22	A, 18	05		20	15					F11-20-031-02-VA	F11-20-031-03-HA	T
ActiveHybrid, 330 d xDrive	01.12 -	1050	1280	E10-20-031-05-22	A, 18, 20	05		35	25					F11-20-030-03-VA	F11-20-031-03-HA	T
335 i xDrive, 340 i xDrive, 330 d xDrive, 335 d xDrive	10.11 -	1095	1280	E10-20-031-06-22	A, 18	05		20	15					F11-20-031-06-VA	F11-20-031-03-HA	T
M3	01.14 -	990	1170	E10-20-031-09-22	A, 18, 20	05		20	5-10					F11-20-031-09-FA	F11-20-031-09-RA	T
Sportline (Performance Fahrwerksfedern Sport | *Sport Performance Springs*)																
316 i, 318 i, 320 i, 328 i, 330 i, 316 d, 318 d, 320 d, 325 d	10.11 -	960	1210	E20-20-031-01-22	A, 18, 20			40	40					F21-20-031-01-VA	F21-20-031-01-HA	T
Anti-Roll-Kit (Performance Stabilisatoren | *Performance Sway Bars*)																
335 i, 340 i, 325 d, 330 d, ActiveHybrid	10.11 -			E40-20-031-01-11	A, 18, 20, 22, 45					28 Rohr *28 tube*	16	2-fach verstellbar *2-way adjustable*	nicht verstellbar *not adjustable*	AS41-20-031-01-VA	AS41-20-031-01-HA	T
316 i, 318 i, 320 i, 328 i, 330 i, 316 d, 318 d, 320 d, 325 d	10.11 -			E40-20-031-02-11	A, 18, 20, 22, 45					28 Rohr *28 tube*	16	2-fach verstellbar *2-way adjustable*	nicht verstellbar *not adjustable*	AS41-20-031-02-VA	AS41-20-031-01-HA	T
Pro-Tronic (Elektronische Performance Fahrwerksmodule | *Electronic Performance Suspension Moduls*)																
Alle Motorisierungen / *all motorisation*	10.11 -			AM65-20-030-01-22	A, 175											
B12 Pro-Kit (Performance Komplettfahrwerke | *Performance Springs+Shocks*)																
316 i, 320 i, 328 i, 316 d, 318 d, 320 d, 325 d	10.11 -	965	1230	E90-20-031-01-22	A, 18, 20, 78, 161			25-30	25					F11-20-031-01-VA	F11-20-031-01-HA	T
318 d xDrive, 320 i xDrive	10.11 -	965	1280	E90-20-031-03-22	A, 18, 20, 78, 161			20	15					F11-20-031-01-VA	F11-20-031-03-HA	T
325 d, 330 d, 335 i	10.11 -	1010	1230	E90-20-031-02-22	A, 18, 20, 78, 161			35	40					F11-20-031-02-VA	F11-20-031-01-HA	T
320 d xDrive, 328 i xDrive	10.11 -	1010	1280	E90-20-031-04-22	A, 18, 20, 78, 161			20	15					F11-20-031-02-VA	F11-20-031-03-HA	T

BMW

Modell	Baujahr	Achslast Vorne kg	Achslast Hinten kg	Artikel-Nr.	Hinweise	ab Nachtrag ...xx BE	bis Nachtrag ...xx BE	ca. Tieferl. Vorne mm	ca. Tieferl. Hinten mm	Ø Vorne mm	Ø Hinten mm	Verstellbarkeit Vorne	Verstellbarkeit Hinten	Ersatzteilbez. Vorne	Ersatzteilbez. Hinten	Gutachten
Model	*Year*	*Front Axle Load kg*	*Rear Axle Load kg*	*Part-No.*	*Notes*	*from suppl. ...xx of type approval*	*to suppl. ...xx of type approval*	*ca. Lowering Front mm*	*ca. Lowering Rear mm*	*Ø Front mm*	*Ø Rear mm*	*Adjustable Front*	*Adjustable Rear*	*Spare Part Marking Front*	*Spare Part Marking Rear*	*Homologation*
3 (F30, F35, F80)																
B12 Pro-Kit (Performance Komplettfahrwerke | *Performance Springs+Shocks*)																
ActiveHybrid, 330 d xDrive	01.12 -	1050	1280	E90-20-031-05-22	A, 18, 20, 78, 161			35	25					F11-20-030-03-VA	F11-20-031-03-HA	T
330 d xDrive, 335 i xDrive, 335 d xDrive	10.11 -	1095	1280	E90-20-031-06-22	A, 18, 20, 78, 161			20	15					F11-20-031-06-VA	F11-20-031-03-HA	T
B12 Sportline (Performance Komplettfahrwerke Sport | *Sport Performance Springs+Shocks*)																
316 i, 318 i, 320 i, 328 i, 330 i, 316 d, 318 d, 320 d, 325 d	10.11 -	960	1210	E95-20-031-01-22	A, 18, 20, 78, 161			40	40					F21-20-031-01-VA	F21-20-031-01-HA	T
Pro-Street-S (Gewindefahrwerke - höhenverstellbar | *Coil-Overs-Adjustable Ride Hight*)																
316 i, 318 i, 320 i, 328 i, 330 i, 316 d, 318 d, 320 d, 325 d, 335 i, 340 i, 325 d, 330 d	10.11 -	950	1230	PSS65-20-031-01-22	A, 18, 20, 21, 24, 25, 45, 160			40-65	30-60							T
316 i, 318 i, 320 i, 328 i, 330 i, 316 d, 318 d, 320 d, 325 d, 335 i, 340 i, 325 d, 330 d	10.11 -	1090	1230	PSS65-20-031-02-22	A, 18, 20, 21, 24, 25, 45, 160			40-65	30-60							T
316 i, 318 i, 320 i, 328 i, 330 i, 316 d, 318 d, 320 d, 325 d, 335 i, 340 i, 325 d, 330 d	10.11 -	950	1230	PSS65-20-031-03-22	A, 18, 20, 24, 25, 45, 160, 176			40-65	30-60							T
316 i, 318 i, 320 i, 328 i, 330 i, 316 d, 318 d, 320 d, 325 d, 335 i, 340 i, 325 d, 330 d	10.11 -	1090	1230	PSS65-20-031-04-22	A, 18, 20, 24, 25, 45, 160, 176			40-65	30-60							T
320 i xDrive, 328 i xDrive, 330 i xDrive, 335 i xDrive, 340i xDrive, 318 d xDrive, 320 d xDrive, 330 d xDrive, 335 d xDrive	10.11 -	1000	1175	PSS65-20-031-07-22	A, 18, 24, 25, 45, 160, 177			25-55	30-60							T
320 i xDrive, 328 i xDrive, 330 i xDrive, 335 i xDrive, 340 i xDrive, 318 d xDrive, 320 d xDrive, 330 d xDrive, 335 d xDrive	10.11 -	1090	1175	PSS65-20-031-08-22	A, 18, 24, 25, 45, 160, 177			25-55	30-60							T
3 Cabriolet (E30)																
3 Convertible (E30)																
Pro-Kit (Performance Fahrwerksfedern | *Performance Springs*)																
318 i	06.88 - 10.93	790	945	E2010-240	A, 18, 20			30	30					F2019001	F2010002	T
320 i, 325 i	12.85 - 10.93	865	945	E2010-140	A, 18, 20			30-40	30					F2010001	F2010002	T
Anti-Roll-Kit (Performance Stabilisatoren | *Performance Sway Bars*)																
318 i, 320 i, 325 i	12.85 - 10.93			E2003-320	A, 18, 20, 22, 45					20	16	3-fach verstellbar *3-way adjustable*	3-fach verstellbar *3-way adjustable*	AS2003320VA	AS2003320HA	T
B12 Pro-Kit (Performance Komplettfahrwerke | *Performance Springs+Shocks*)																
318 i	06.88 - 10.93	790	945	E90-20-007-07-22	A, 18, 20, 77, 78, 161			30	30					F2019001	F2010002	T
318 i	06.88 - 10.93	790	945	E90-20-007-08-22	A, 18, 20, 78, 161			30	30					F2019001	F2010002	T
320 i, 325 i	12.85 - 10.93	865	945	E90-20-007-09-22	A, 18, 20, 77, 78, 161			30-40	30					F2010001	F2010002	T
320 i, 325 i	12.85 - 10.93	865	945	E90-20-007-10-22	A, 18, 20, 78, 161			30-40	30					F2010001	F2010002	T
3 Cabriolet (E36)																
3 Convertible (E36)																
Pro-Kit (Performance Fahrwerksfedern | *Performance Springs*)																
318 i	01.94 - 04.99	830	1115	E2043-140	A, 18, 20, 68			30	30					F2021101	F2042002	ABE
320 i, 323 i, 325 i, 328 i	03.93 - 04.99	900	1115	E2042-140	A, 18, 20, 68			30	30					F2033001	F2042002	ABE
M3 3.0	01.94 - 10.95	910	1090	E2041-140	A, 18, 20			25	15					F2019001	F2021002	T
M3 3.2	10.95 - 04.99	920	1130	E2059-140	A, 18, 20			25	15					F2059001	F2042002	T
Sportline (Performance Fahrwerksfedern Sport | *Sport Performance Springs*)																
318 i	01.94 - 04.99	830	1070	E20-20-004-05-22	A, 18, 20			45-50	30					F21-20-004-01-VA	F21-20-004-04-HA	T
320 i, 323 i, 325 i, 328 i	03.93 - 04.99	900	1070	E20-20-004-06-22	A, 18, 20			45-50	30					F21-20-004-02-VA	F21-20-004-04-HA	T
Anti-Roll-Kit (Performance Stabilisatoren | *Performance Sway Bars*)																
318 i, 320 i, 323 i, 325 i, 328 i	05.93 - 04.99			E2021-321	A, 18, 20, 22, 45					28	21	2-fach verstellbar *2-way adjustable*	2-fach verstellbar *2-way adjustable*	AS2021321VA	AS2021320HA	T
B12 Pro-Kit (Performance Komplettfahrwerke | *Performance Springs+Shocks*)																
318 i	01.94 - 04.99	830	1115	E90-20-004-07-22	A, 18, 20, 68, 78, 161			30	30					F2021101	F2042002	ABE
320 i, 323 i, 325 i, 328 i	03.93 - 04.99	900	1115	E90-20-004-08-22	A, 18, 20, 68, 78, 161			30	30					F2033001	F2042002	ABE
M3 3.0	01.94 - 10.95	910	1090	E90-20-004-11-22	A, 18, 20, 78, 161			25	15					F2019001	F2021002	T
M3 3.2	10.95 - 04.99	920	1130	E90-20-004-12-22	A, 18, 20, 78, 161			25	15					F2059001	F2042002	T
B12 Sportline (Performance Komplettfahrwerke Sport | *Sport Performance Springs+Shocks*)																
318 i Schaltgetriebe *318 i manual transmission*	01.94 - 04.99	830	1070	E95-20-004-07-22	A, 18, 20, 68, 78, 161			45-50	30					F21-20-004-01-VA	F21-20-004-04-HA	T
320 i, 323 i, 325 i, 328 i	03.93 - 04.99	900	1070	E95-20-004-08-22	A, 18, 20, 68, 78, 161			45-50	30					F21-20-004-02-VA	F21-20-004-04-HA	T
Pro-Street-S (Gewindefahrwerke - höhenverstellbar | *Coil-Overs-Adjustable Ride Hight*)																
318 i, 320 i, 323 i, 325 i, 328 i	05.93 - 04.99	890	1150	PSS65-20-004-01-22	A, 18, 20, 24, 25, 45, 160			40-80	40-80							T
M3 3.0, M3 3.2	01.94 - 04.99	920	1130	PSS65-20-004-02-22	A, 18, 20, 24, 25, 45, 160			30-60	30-60							T
3 Cabriolet (E46)																
3 Convertible (E46)																
Pro-Kit (Performance Fahrwerksfedern | *Performance Springs*)																
318 Ci	09.01 -	895	1190	E2066-140	A, 18, 20, 68			30	15-20					F2066001	F2067102	T
320 Cd, 320 Ci, 323 Ci, 325 Ci, 330 Ci	04.00 -	970	1190	E2067-140	A, 18, 20, 68			40	20-25					F2067001	F2067102	T
M3 3.2	04.01 -	990	1170	E10-20-001-02-22	A, 18, 20			20	10					F11-20-001-02-VA	F11-20-001-02-HA	T
330 Cd	08.05 -	1030	1190	E10-20-001-01-22	A, 18, 20, 68			30	20-25					F11-20-001-01-VA	F2067102	T

BMW

Modell *Model*	Baujahr *Year*	Achslast Vorne kg *Front Axle Load kg*	Achslast Hinten kg *Rear Axle Load kg*	Artikel-Nr. *Part-No.*	Hinweise *Notes*	ab Nachtrag ...xx BE *from suppl. ...xx of type approval*	bis Nachtrag ...xx BE *to suppl. ...xx of type approval*	ca. Tieferl. Vorne mm *ca. Lowering Front mm*	ca. Tieferl. Hinten mm *ca. Lowering Rear mm*	Ø Vorne mm *Ø Front mm*	Ø Hinten mm *Ø Rear mm*	Verstellbarkeit Vorne *Adjustable Front*	Verstellbarkeit Hinten *Adjustable Rear*	Ersatzteilbez. Vorne *Spare Part Marking Front*	Ersatzteilbez. Hinten *Spare Part Marking Rear*	Gutachten *Homologation*
3 Cabriolet (E46) ***3 Convertible (E46)***																
Anti-Roll-Kit (Performance Stabilisatoren | *Performance Sway Bars*)																
318 Ci, 320 Cd, 320 Ci, 323 Ci, 325 Ci, 330 Cd, 330 Ci	04.00 -			E2066-320	A, 18, 20, 22, 45					27	21	2-fach verstellbar *2-way adjustable*	nicht verstellbar *not adjustable*	AS2066320VA	AS2066320HA	T
M3 3.2	04.01 -			E40-20-001-01-11	A, 18, 20, 22, 45					29	25	2-fach verstellbar *2-way adjustable*	nicht verstellbar *not adjustable*	AS41-20-001-01-VA	AS41-20-001-01-HA	T
B12 Pro-Kit (Performance Komplettfahrwerke | *Performance Springs+Shocks*)																
318 Ci	09.01 -	895	1190	E90-20-001-01-22	A, 18, 20, 68, 78, 161			30	15-20					F2066001	F2067102	T
320 Cd, 320 Ci, 323 Ci, 325 Ci, 330 Ci	04.00 -	970	1190	E90-20-001-02-22	A, 18, 20, 68, 78, 161			40	20-25					F2067001	F2067102	T
M3 3.2	04.01 -	990	1170	E90-20-001-04-22	A, 18, 20, 78, 155, 161			20	10					F11-20-001-02-VA	F11-20-001-02-HA	T
330 Cd	08.05 -	1030	1190	E90-20-001-03-22	A, 18, 20, 68, 78, 161			30	20-25					F11-20-001-01-VA	F2067102	T
Pro-Street-S (Gewindefahrwerke - höhenverstellbar | *Coil-Overs-Adjustable Ride Hight*)																
318 Ci, 320 Ci, 323 Ci, 325 Ci	04.00 -	910	1215	PSS65-20-001-01-22	A, 18, 20, 24, 25, 45, 160			40-75	40-75							T
318 Ci, 320 Ci, 323 Ci, 325 Ci, 330 Ci	04.00 -	1000	1215	PSS65-20-001-02-22	A, 18, 20, 24, 25, 45, 160			40-75	40-75							T
M3 3.2	04.01 -	990	1170	PSS65-20-001-03-22	A, 18, 20, 24, 25, 45, 160			20-40	20-40							T
3 Cabriolet (E93) ***3 Convertible (E93)***																
Pro-Kit (Performance Fahrwerksfedern | *Performance Springs*)																
318 i, 320 d, 320 i	01.07 -	930	1200	E10-20-014-14-22	A, 18, 20			30	10-15					F11-20-013-01-VA	F11-20-014-14-HA	T
323 i, 325 i, 328 i, 330 i, 335 i	03.07 -	990	1200	E10-20-014-15-22	A, 18, 20			30	10-15					F11-20-013-02-VA	F11-20-014-14-HA	T
325 d, 330 d	03.07 -	1085	1200	E10-20-014-16-22	A, 18, 20			30	10-15					F11-20-014-04-VA	F11-20-014-14-HA	T
Anti-Roll-Kit (Performance Stabilisatoren | *Performance Sway Bars*)																
318 i, 320 d, 320 i, 323 i, 325 d, 325 i, 328 i, 330 d, 330 i, 335 i	01.07 -			E40-20-013-01-11	A, 18, 20, 22, 45					28	15	nicht verstellbar *not adjustable*	nicht verstellbar *not adjustable*	AS41-20-013-01-VA	AS41-20-013-01-HA	T
Pro-Tronic (Elektronische Performance Fahrwerksmodule | *Electronic Performance Suspension Moduls*)																
M	08.06 -			AM65-20-014-17-22	A, 175											
B12 Pro-Kit (Performance Komplettfahrwerke | *Performance Springs+Shocks*)																
318 i, 320 d, 320 i	03.07 -	930	1200	E90-20-014-14-22	A, 18, 20, 78, 161			30	10-15					F11-20-013-01-VA	F11-20-014-14-HA	T
323 i, 325 i, 328 i, 330 i, 335 i	03.07 -	990	1200	E90-20-014-15-22	A, 18, 20, 78, 161			30	10-15					F11-20-013-02-VA	F11-20-014-14-HA	T
325 d, 330 d	03.07 -	1085	1200	E90-20-014-16-22	A, 18, 20, 78, 161			30	10-15					F11-20-014-04-VA	F11-20-014-14-HA	T
Pro-Street-S (Gewindefahrwerke - höhenverstellbar | *Coil-Overs-Adjustable Ride Hight*)																
318 i, 320 d, 320 i, 323 i, 325 d, 325 i, 328 i, 330 d, 330 i, 335 i	01.07 -	1020	1200	PSS65-20-014-02-22	A, 18, 20, 24, 25, 45, 160			30-60	30-60							T
Pro-Street-S (Gewindefahrwerke - höhenverstellbar | *Coil-Overs-Adjustable Ride Hight*)																
318 i, 320 d, 320 i, 323 i, 325 d, 325 i, 328 i, 330 d, 330 i, 335 i	01.07 -	1020	1200	PSS65-20-014-02-22	A, 18, 20, 24, 25, 45, 160			30-60	30-60							T
3 Compact (E36)																
Pro-Kit (Performance Fahrwerksfedern | *Performance Springs*)																
316 i, 318 ti	03.94 - 08.00	830	970	E2044-140	A, 18, 20, 68			30	30					F2021101	F2019002	ABE
318 tds, 323 ti	01.95 - 08.00	900	970	E2051-140	A, 18, 20, 68			30	30					F2033001	F2019002	ABE
Sportline (Performance Fahrwerksfedern Sport | *Sport Performance Springs*)																
316 i, 318 ti	03.94 - 08.00	830	970	E20-20-004-07-22	A, 18, 20, 68			45-50	30					F21-20-004-01-VA	F21-20-004-08-HA	T
318 tds, 323 ti	01.95 - 08.00	900	970	E20-20-004-08-22	A, 18, 20, 68			45-50	30					F21-20-004-02-VA	F21-20-004-08-HA	T
B12 Pro-Kit (Performance Komplettfahrwerke | *Performance Springs+Shocks*)																
316 i, 318 ti	03.94 - 08.00	830	970	E90-20-004-09-22	A, 18, 20, 68, 78, 161			30	30					F2021101	F2019002	ABE
318 tds, 323 ti	01.95 - 08.00	900	970	E90-20-004-10-22	A, 18, 20, 68, 78, 161			30	30					F2033001	F2019002	ABE
B12 Sportline (Performance Komplettfahrwerke Sport | *Sport Performance Springs+Shocks*)																
316 i Schaltgetriebe, 318 ti Schaltgetriebe *316 i manual transmission, 318 ti manual transmission*	03.94 - 08.00	830	970	E95-20-004-09-22	A, 18, 20, 68, 78, 161			45-50	30					F21-20-004-01-VA	F21-20-004-08-HA	T
318 tds, 323 ti	01.95 - 08.00	900	970	E95-20-004-10-22	A, 18, 20, 68, 78, 161			45-50	30					F21-20-004-02-VA	F21-20-004-08-HA	T
3 Compact (E46)																
Pro-Kit (Performance Fahrwerksfedern | *Performance Springs*)																
316 ti, 318 ti	06.01 - 02.05	895	1045	E10-20-001-08-22	A, 18, 20, 68			25	15					F2066001	F11-20-001-09-HA	T
318 td, 320 td, 325 ti	06.01 - 02.05	970	1045	E10-20-001-09-22	A, 18, 20, 68			25	15					F2067001	F11-20-001-09-HA	T
Sportline (Performance Fahrwerksfedern Sport | *Sport Performance Springs*)																
316 ti, 318 ti	06.01 - 02.05	895	1190	E20-20-001-04-22	A, 18, 20, 68			30-35	15					F21-20-001-01-VA	F21-20-001-02-HA	T
318 td, 320 td, 325 ti	06.01 - 02.05	935	1190	E20-20-001-02-22	A, 18, 20, 68			30-35	15					F21-20-001-02-VA	F21-20-001-02-HA	T
Anti-Roll-Kit (Performance Stabilisatoren | *Performance Sway Bars*)																
316 ti, 318 td, 318 ti, 320 td, 325 ti	06.01 - 02.05			E40-20-001-02-11	A, 18, 20, 22, 45					27	23	2-fach verstellbar *2-way adjustable*	nicht verstellbar *not adjustable*	AS2066320VA	AS41-20-001-02-HA	T
B12 Pro-Kit (Performance Komplettfahrwerke | *Performance Springs+Shocks*)																
316 ti, 318 ti	06.01 - 02.05	895	1045	E90-20-001-07-22	A, 18, 20, 68, 78, 161			25	15					F2066001	F11-20-001-09-HA	T
318 td, 320 td, 325 ti	06.01 - 02.05	970	1045	E90-20-001-08-22	A, 18, 20, 68, 78, 161			25	15					F2067001	F11-20-001-09-HA	T
B12 Sportline (Performance Komplettfahrwerke Sport | *Sport Performance Springs+Shocks*)																
316 ti, 318 ti	06.01 - 02.05	895	1190	E95-20-001-05-22	A, 18, 20, 68, 78, 161			30-35	15					F21-20-001-01-VA	F21-20-001-02-HA	T
325 ti, 318 td, 320 td	06.01 - 02.05	935	1190	E95-20-001-02-22	A, 18, 20, 68, 78 161			30-35	15					F21-20-001-02-VA	F21-20-001-02-HA	T

Modell *Model*	Baujahr *Year*	Achslast Vorne kg *Front Axle Load kg*	Achslast Hinten kg *Rear Axle Load kg*	Artikel-Nr. *Part-No.*	Hinweise *Notes*	ab Nachtrag ...xx BE *from suppl. ...xx of type approval*	bis Nachtrag ...xx BE *to suppl. ...xx of type approval*	ca. Tieferl. Vorne mm *ca. Lowering Front mm*	ca. Tieferl. Hinten mm *ca. Lowering Rear mm*	Ø Vorne mm *Ø Front mm*	Ø Hinten mm *Ø Rear mm*	Verstellbarkeit Vorne *Adjustable Front*	Verstellbarkeit Hinten *Adjustable Rear*	Ersatzteilbez. Vorne *Spare Part Marking Front*	Ersatzteilbez. Hinten *Spare Part Marking Rear*	Gutachten *Homologation*
3 Coupe (E36)																
Pro-Kit (Performance Fahrwerksfedern | *Performance Springs*)																
316 i, 318 is	03.92 - 04.99	830	1070	E2021-240	A, 18, 20, 68			30	15					F2021101	F2021002	ABE
320 i, 323 i, 325 i, 328 i	03.92 - 04.99	900	1070	E2033-140	A, 18, 20, 68			30	15					F2033001	F2021002	ABE
M3 3.0	10.92 - 10.95	910	1090	E2041-140	A, 18, 20			25	15					F2019001	F2021002	T
M3 3.2	10.95 - 04.99	920	1130	E2059-140	A, 18, 20			25	15					F2059001	F2042002	T
Sportline (Performance Fahrwerksfedern Sport | *Sport Performance Springs*)																
316 i, 318 is	03.92 - 04.99	830	1070	E20-20-004-01-22	A, 18, 20, 68			45-50	30					F21-20-004-01-VA	F21-20-004-02-HA	T
320 i, 323 i, 325 i, 328 i	03.92 - 04.99	900	1070	E20-20-004-02-22	A, 18, 20, 68			45-50	30					F21-20-004-02-VA	F21-20-004-02-HA	T
Anti-Roll-Kit (Performance Stabilisatoren | *Performance Sway Bars*)																
316 i, 318 is, 320 i, 323 i, 325 i, 328 i	03.92 - 04.99			E2021-321	A, 18, 20, 22, 45					28	21	2-fach verstellbar *2-way adjustable*	2-fach verstellbar *2-way adjustable*	AS2021321VA	AS2021320HA	T
B12 Pro-Kit (Performance Komplettfahrwerke | *Performance Springs+Shocks*)																
318 is	03.92 - 05.92	830	1070	E90-20-004-01-22	A, 18, 20, 68, 78, 161			30	15					F2021101	F2021002	ABE
316 i, 318 is	06.92 - 04.99	830	1070	E90-20-004-02-22	A, 18, 20, 68, 78, 161			30	15					F2021101	F2021002	ABE
320 i, 323 i, 325 i, 328 i	06.92 - 04.99	900	1070	E90-20-004-04-22	A, 18, 20, 68, 78, 161			30	15					F2033001	F2021002	ABE
M3 3.0	10.92 - 10.95	910	1090	E90-20-004-11-22	A, 18, 20, 78, 161			25	15					F2019001	F2021002	T
M3 3.2	10.95 - 04.99	920	1130	E90-20-004-12-22	A, 18, 20, 78, 161			25	15					F2059001	F2042002	T
B12 Sportline (Performance Komplettfahrwerke Sport | *Sport Performance Springs+Shocks*)																
318 is Schaltgetriebe *318 is manual transmission*	03.92 - 05.92	830	1070	E95-20-004-01-22	A, 18, 20, 68, 78, 161			45-50	30					F21-20-004-01-VA	F21-20-004-02-HA	T
316 i Schaltgetriebe, 318 is Schaltgetriebe *316 i manual transmission, 318 is manual transmission*	06.92 - 04.99	830	1070	E95-20-004-02-22	A, 18, 20, 68, 78, 161			45-50	30					F21-20-004-01-VA	F21-20-004-02-HA	T
320 i, 325 i	03.92 - 05.92	900	1070	E95-20-004-03-22	A, 18, 20, 68, 78, 161			45-50	30					F21-20-004-02-VA	F21-20-004-02-HA	T
320 i, 323 i, 325 i, 328 i	06.92 - 04.99	900	1070	E95-20-004-04-22	A, 18, 20, 68, 78, 161			45-50	30					F21-20-004-02-VA	F21-20-004-02-HA	T
Pro-Street-S (Gewindefahrwerke - höhenverstellbar | *Coil-Overs-Adjustable Ride Hight*)																
316 i, 318 is, 320 i, 323 i, 325 i, 328 i	03.92 - 04.99	890	1150	PSS65-20-004-01-22	A, 18, 20, 24, 25, 45, 160			40-80	40-80							T
M3 3.0, M3 3.2	10.92 - 04.99	920	1130	PSS65-20-004-02-22	A, 18, 20, 24, 25, 45, 160			30-60	30-60							T
3 Coupe (E46)																
Pro-Kit (Performance Fahrwerksfedern | *Performance Springs*)																
316 Ci, 318 Ci	11.99 -	895	1100	E2066-140	A, 18, 20, 68			25	10					F2066001	F2067102	T
320 Cd, 320 Ci, 323 Ci, 325 Ci, 328 Ci, 330 Ci	04.99 -	970	1100	E2067-140	A, 18, 20, 68			25	10					F2067001	F2067102	T
M3 3.2	06.00 -	990	1170	E10-20-001-02-22	A, 18, 20			20	10					F11-20-001-02-VA	F11-20-001-02-HA	T
330 Cd	03.03 -	1030	1100	E10-20-001-01-22	A, 18, 20, 68			25	10					F11-20-001-01-VA	F2067102	T
Sportline (Performance Fahrwerksfedern Sport | *Sport Performance Springs*)																
316 Ci, 318 Ci	11.99 -	895	1045	E20-20-001-01-22	A, 18, 20, 68			30-35	15					F21-20-001-01-VA	F21-20-001-01-HA	T
320 Ci, 323 Ci, 325 Ci, 328 Ci, 330 Ci	04.99 -	935	1190	E20-20-001-03-22	A, 18, 20, 68			30-35	15					F21-20-001-02-VA	F21-20-001-02-HA	T
Anti-Roll-Kit (Performance Stabilisatoren | *Performance Sway Bars*)																
316 Ci, 318 Ci, 320 Cd, 320 Ci, 323 Ci, 325 Ci, 328 Ci, 330 Ci, 330 Cd	04.99 -			E2066-320	A, 18, 20, 22, 45					27	21	2-fach verstellbar *2-way adjustable*	nicht verstellbar *not adjustable*	AS2066320VA	AS2066320HA	T
M3 3.2	06.00 -			E40-20-001-01-11	A, 18, 20, 22, 45					29	25	2-fach verstellbar *2-way adjustable*	nicht verstellbar *not adjustable*	AS41-20-001-01-VA	AS41-20-001-01-HA	T
B12 Pro-Kit (Performance Komplettfahrwerke | *Performance Springs+Shocks*)																
316 Ci, 318 Ci	11.99 -	895	1190	E90-20-001-01-22	A, 18, 20, 68, 78, 161			25	10					F2066001	F2067102	T
320 Cd, 320 Ci, 323 Ci, 325 Ci, 328 Ci, 330 Ci	04.99 -	970	1190	E90-20-001-02-22	A, 18, 20, 68, 78, 161			25	10					F2067001	F2067102	T
M3 3.2	06.00 -	990	1170	E90-20-001-04-22	A, 18, 20, 78, 155, 161			20	10					F11-20-001-02-VA	F11-20-001-02-HA	T
330 Cd	03.03 -	1030	1190	E90-20-001-03-22	A, 18, 20, 68, 78, 161			25	10					F11-20-001-01-VA	F2067102	T
B12 Sportline (Performance Komplettfahrwerke Sport | *Sport Performance Springs+Shocks*)																
316 Ci, 318 Ci	11.99 -	895	1045	E95-20-001-01-22	A, 18, 20, 68, 78, 161			30-35	15					F21-20-001-01-VA	F21-20-001-01-HA	T
320 Ci, 323 Ci, 325 Ci, 328 Ci	04.99 -	935	1190	E95-20-001-03-22	A, 18, 20, 68, 78, 161			30-35	15					F21-20-001-02-VA	F21-20-001-02-HA	T
330 Ci Schaltgetriebe *330 Ci manual transmission*	06.00 -	935	1190	E95-20-001-03-22	A, 18, 20, 68, 78, 161			30-35	15					F21-20-001-02-VA	F21-20-001-02-HA	T
Pro-Street-S (Gewindefahrwerke - höhenverstellbar | *Coil-Overs-Adjustable Ride Hight*)																
316 Ci, 318 Ci, 320 Cd, 320 Ci, 323 Ci, 325 Ci, 328 Ci	04.99 -	910	1215	PSS65-20-001-01-22	A, 18, 20, 24, 25, 45, 160			40-75	40-75							T
316 Ci, 318 Ci, 320 Cd, 320 Ci, 323 Ci, 325 Ci, 328 Ci, 330 Cd, 330 Ci	04.99 -	1000	1215	PSS65-20-001-02-22	A, 18, 20, 24, 25, 45, 160			40-75	40-75							T
M3 3.2, M3 CSL	04.01 -	990	1170	PSS65-20-001-03-22	A, 18, 20, 24, 25, 45, 160			20-40	20-40							T
3 Coupe (E92)																
Pro-Kit (Performance Fahrwerksfedern | *Performance Springs*)																
316 i, 318 i, 320 i, 323 i, 325 i, 328 i, 330 i, 320 d	06.06 -	930	1090	E10-20-014-12-22	A, 18, 20			35	25					F11-20-013-01-VA	F11-20-013-01-HA	T
325 d, 330 d, 335 d, 335 i	09.06 -	990	1090	E10-20-014-13-22	A, 18, 20			35	25					F11-20-013-02-VA	F11-20-013-01-HA	T
M	03.07 -	1060	1190	E10-20-014-17-22	A, 18, 20			20	15					F11-20-014-17-VA	F11-20-014-17-HA	T
Anti-Roll-Kit (Performance Stabilisatoren | *Performance Sway Bars*)																
316 i, 318 i, 320 d, 320 i, 323 i, 325 d, 325 i, 328 i, 330 d, 330 i, 335 d, 335 i	06.06 -			E40-20-013-01-11	A, 18, 20, 22, 45					28	15	nicht verstellbar *not adjustable*	nicht verstellbar *not adjustable*	AS41-20-013-01-VA	AS41-20-013-01-HA	T
Pro-Tronic (Elektronische Performance Fahrwerksmodule | *Electronic Performance Suspension Moduls*)																
M	03.07 -			AM65-20-014-17-22	A, 175											

BMW

Modell *Model*	Baujahr *Year*	Achslast Vorne kg *Front Axle Load kg*	Achslast Hinten kg *Rear Axle Load kg*	Artikel-Nr. *Part-No.*	Hinweise *Notes*	ab Nachtrag ...xx BE *from suppl. ...xx of type approval*	bis Nachtrag ...xx BE *to suppl. ...xx of type approval*	ca. Tieferl. Vorne mm *ca. Lowering Front mm*	ca. Tieferl. Hinten mm *ca. Lowering Rear mm*	Ø Vorne mm *Ø Front mm*	Ø Hinten mm *Ø Rear mm*	Verstellbarkeit Vorne *Adjustable Front*	Verstellbarkeit Hinten *Adjustable Rear*	Ersatzteilbez. Vorne *Spare Part Marking Front*	Ersatzteilbez. Hinten *Spare Part Marking Rear*	Gutachten *Homologation*
3 Coupe (E92)																
B12 Pro-Kit (Performance Komplettfahrwerke | *Performance Springs+Shocks*)																
316 i, 318 i, 320 i, 323 i, 325 i, 328 i, 330 i, 320 d	06.06 -	930	1090	E90-20-014-12-22	A, 18, 20, 78, 161			35	25					F11-20-013-01-VA	F11-20-013-01-HA	T
325 d, 330 d, 335 d, 335 i	09.06 -	990	1090	E90-20-014-13-22	A, 18, 20, 78, 161			35	25					F11-20-013-02-VA	F11-20-013-01-HA	T
M	03.07 -	1060	1190	E90-20-014-17-22	A, 18, 20, 21, 78, 159, 161			20	15					F11-20-014-17-VA	F11-20-014-17-HA	T
Pro-Street-S (Gewindefahrwerke - höhenverstellbar | *Coil-Overs-Adjustable Ride Hight*)																
316 i, 318 i, 320 d, 320 i, 323 i, 325 d, 325 i, 328 i, 330 d, 330 i, 335 d, 335 i	06.06 -	1035	1110	PSS65-20-013-01-22	A, 18, 20, 24, 25, 45, 160			20-50	20-50							T
3 GRAN TURISMO (F34)																
Pro-Kit (Performance Fahrwerksfedern | *Performance Springs*)																
318 d, 320 d, 320 i, 328 i	03.13 -	965	1280	E10-20-031-03-22	A, 18, 20			30-40	25-30					F11-20-031-01-VA	F11-20-031-03-HA	T
325 d, 335 i, 330 d	03.13 -	1010	1280	E10-20-031-04-22	A, 18, 20			30-40	25-30					F11-20-031-02-VA	F11-20-031-03-HA	T
Sportline (Performance Fahrwerksfedern Sport | *Sport Performance Springs*)																
318 d, 320 d, 320 i, 328 i	03.13 -	960	1280	E20-20-031-02-22	A, 18, 20			40-50	35-40					F21-20-031-01-VA	F21-20-031-02-HA	T
Anti-Roll-Kit (Performance Stabilisatoren | *Performance Sway Bars*)																
318 d, 320 d, 320 i, 325 d, 328 i	03.13 -			E40-20-031-02-11	A, 18, 20, 22, 45					28 Rohr *28 tube*	16	2-fach verstellbar *2-way adjustable*	nicht verstellbar *not adjustable*	AS41-20-031-02-VA	AS41-20-031-01-HA	T
335 i, 330 d	03.13 -			E40-20-031-01-11	A, 18, 20, 22, 45					28 Rohr *28 tube*	16	2-fach verstellbar *2-way adjustable*	nicht verstellbar *not adjustable*	AS41-20-031-01-VA	AS41-20-031-01-HA	T
Pro-Tronic (Elektronische Performance Fahrwerksmodule | *Electronic Performance Suspension Moduls*)																
Alle Motorisierungen / *all motorisation*	03.13 -			AM65-20-030-01-22	A, 175											
B12 Pro-Kit (Performance Komplettfahrwerke | *Performance Springs+Shocks*)																
318 d, 320 d, 320 i, 328 i	03.13 -	965	1280	E90-20-031-09-22	A, 18, 20, 78, 161			25-30	25					F11-20-031-01-VA	F11-20-031-03-HA	T
325 d, 335 i, 330 d	03.13 -	1010	1280	E90-20-031-10-22	A, 18, 20, 78, 161			25-30	25							T
B12 Sportline (Performance Komplettfahrwerke Sport | *Sport Performance Springs+Shocks*)																
318 d, 320 d, 320 i, 328 i	03.13 -	960	1280	E95-20-031-02-22	A, 18, 20, 78, 161			40	35					F21-20-031-01-VA	F21-20-031-02-HA	T
Pro-Street-S (Gewindefahrwerke - höhenverstellbar | *Coil-Overs-Adjustable Ride Hight*)																
316 i, 320 i, 328 i, 316 d, 318 d, 320 d, 335 i, 325 d, 330 d	03.13 -	950	1265	PSS65-20-031-09-22	A, 20, 21, 24, 25, 45, 160			30-55	15-40							T
316 i, 320 i, 328 i, 316 d, 318 d, 320 d, 335 i, 325 d, 330 d	03.13 -	1015	1265	PSS65-20-031-10-22	A, 20, 21, 24, 25, 45, 160			30-55	15-40							T
316 i, 320 i, 328 i, 316 d, 318 d, 320 d, 335 i, 325 d, 330 d	03.13 -	950	1265	PSS65-20-031-11-22	A, 20, 24, 25, 45, 160, 176			30-55	15-40							T
316 i, 320 i, 328 i, 316 d, 318 d, 320 d, 335 i, 325 d, 330 d	03.13 -	1015	1265	PSS65-20-031-12-22	A, 20, 24, 25, 45, 160, 176			30-55	15-40							T
3 Touring (E30)																
Anti-Roll-Kit (Performance Stabilisatoren | *Performance Sway Bars*)																
316 i, 318 i, 320 i, 324 td, 325 i	07.87 - 06.94			E2003-320	A, 18, 20, 22, 45					20	16	3-fach verstellbar *3-way adjustable*	3-fach verstellbar *3-way adjustable*	AS2003320VA	AS2003320HA	T
3 Touring (E36)																
Pro-Kit (Performance Fahrwerksfedern | *Performance Springs*)																
316 i, 318 i	07.95 - 10.99	830	1115	E2052-140	A, 18, 20, 68			30	30					F2021101	F2042002	ABE
318 tds, 320 i, 323 i, 325 tds, 328 i	01.95 - 10.99	900	1115	E2050-140	A, 18, 20, 68			30	30					F2033001	F2042002	ABE
Sportline (Performance Fahrwerksfedern Sport | *Sport Performance Springs*)																
316 i, 318 i	07.95 - 10.99	830	1115	E20-20-004-03-22	A, 20, 68			45-50	30					F21-20-004-01-VA	F21-20-004-04-HA	T
318 tds, 320 i, 323 i, 325 tds, 328 i	01.95 - 10.99	900	1115	E20-20-004-04-22	A, 20, 68			45-50	30					F21-20-004-02-VA	F21-20-004-04-HA	T
Anti-Roll-Kit (Performance Stabilisatoren | *Performance Sway Bars*)																
316 i, 318 i, 318 tds, 320 i, 323 i, 325 tds, 328 i	03.93 - 10.99			E2021-321	A, 18, 20, 22, 45					28	21	2-fach verstellbar *2-way adjustable*	2-fach verstellbar *2-way adjustable*	AS2021321VA	AS2021320HA	T
B12 Pro-Kit (Performance Komplettfahrwerke | *Performance Springs+Shocks*)																
316 i, 318 i	07.95 - 10.99	830	1115	E90-20-004-05-22	A, 18, 20, 68, 78, 101, 161			30	30					F2021101	F2042002	ABE
318 tds, 320 i, 323 i, 325 tds, 328 i	01.95 - 10.99	900	1115	E90-20-004-06-22	A, 18, 20, 68, 78, 161			30	30					F2033001	F2042002	ABE
B12 Sportline (Performance Komplettfahrwerke Sport | *Sport Performance Springs+Shocks*)																
316 i Schaltgetriebe, 318 i Schaltgetriebe *316 i manual transmission, 318 i manual transmission*	07.95 - 10.99	830	1115	E95-20-004-05-22	A, 18, 20, 68, 78, 101, 161			45-30	30					F21-20-004-01-VA	F21-20-004-04-HA	T
318 tds, 320 i, 323 i, 325 tds, 328 i	01.95 - 10.99	900	1115	E95-20-004-06-22	A, 18, 20, 68, 78, 161			45-30	30					F21-20-004-02-VA	F21-20-004-04-HA	T
Pro-Street-S (Gewindefahrwerke - höhenverstellbar | *Coil-Overs-Adjustable Ride Hight*)																
316 i, 318 i, 318 tds, 320 i, 323 i, 325 tds, 328 i	01.95 - 10.99	890	1150	PSS65-20-004-01-22	A, 24, 25, 45, 160			40-80	40-80							T
3 Touring (E46)																
Pro-Kit (Performance Fahrwerksfedern | *Performance Springs*)																
316 i, 318 i	10.99 - 02.05	895	1190	E2066-140	A, 18, 20, 68			30	20-25					F2066001	F2067102	T
318 d, 320 d, 320 i, 325 i, 328 i, 330 i	10.99 - 02.05	970	1190	E2067-140	A, 18, 20, 68			30	20-25					F2067001	F2067102	T
325 xi, 330 xi	06.00 - 02.05	1010	1250	E10-20-001-05-22	A, 18			30	20-25					F2067001	F11-20-001-03-HA	T
330 d	10.99 - 02.05	1030	1190	E10-20-001-01-22	A, 18, 20, 68			30	20-25					F11-20-001-01-VA	F2067102	T
330 xd	06.00 - 02.05	1075	1250	E10-20-001-06-22	A, 18			30	20-25					F11-20-001-01-VA	F11-20-001-03-HA	T
Sportline (Performance Fahrwerksfedern Sport | *Sport Performance Springs*)																
316 i, 318 i	10.99 - 02.05	895	1190	E20-20-001-04-22	A, 20, 68			45-50	30					F21-20-001-01-VA	F21-20-001-02-HA	T
318 d, 320 d, 320 i, 325 i, 328 i, 330 i	10.99 - 02.05	935	1190	E20-20-001-03-22	A, 20, 68			45-50	30					F21-20-001-02-VA	F21-20-001-02-HA	T
Anti-Roll-Kit (Performance Stabilisatoren | *Performance Sway Bars*)																
316 i, 318 d, 318 i, 320 d, 320 i, 325 i, 328 i, 330 d, 330 i	10.99 - 02.05			E2066-320	A, 18, 20, 22, 45					27	21	2-fach verstellbar *2-way adjustable*	nicht verstellbar *not adjustable*	AS2066320VA	AS2066320HA	T

Modell	Baujahr	Achslast Vorne kg	Achslast Hinten kg	Artikel-Nr.	Hinweise	ab Nachtrag ...xx BE	bis Nachtrag ...xx BE	ca. Tieferl. Vorne mm	ca. Tieferl. Hinten mm	Ø Vorne mm	Ø Hinten mm	Verstellbarkeit Vorne	Verstellbarkeit Hinten	Ersatzteilbez. Vorne	Ersatzteilbez. Hinten	Gutachten
Model	*Year*	*Front Axle Load kg*	*Rear Axle Load kg*	*Part-No.*	*Notes*	*from suppl. ...xx of type approval*	*to suppl. ...xx of type approval*	*ca. Lowering Front mm*	*ca. Lowering Rear mm*	*Ø Front mm*	*Ø Rear mm*	*Adjustable Front*	*Adjustable Rear*	*Spare Part Marking Front*	*Spare Part Marking Rear*	*Homologation*
3 Touring (E46)																
B12 Pro-Kit (Performance Komplettfahrwerke | *Performance Springs+Shocks*)																
316 i, 318 i	10.99 - 02.05	895	1190	E90-20-001-01-22	A, 18, 20, 68, 78, 161			30	20-25					F2066001	F2067102	T
318 d, 320 d, 320 i, 325 i, 328 i, 330 i	10.99 - 02.05	970	1190	E90-20-001-02-22	A, 18, 20, 68, 78, 161			30	20-25					F2067001	F2067102	T
330 d	10.99 - 02.05	1030	1190	E90-20-001-03-22	A, 18, 20, 68, 78, 161			30	20-25					F11-20-001-01-VA	F2067102	T
B12 Sportline (Performance Komplettfahrwerke Sport | *Sport Performance Springs+Shocks*)																
316 i, 318 i	10.99 - 02.05	895	1190	E95-20-001-04-22	A, 18, 20, 68, 78, 161			45-50	30					F21-20-001-01-VA	F21-20-001-02-HA	T
318 d, 320 d, 320 i, 325 i, 328 i	10.99 - 02.05	935	1190	E95-20-001-03-22	A, 18, 20, 68, 78, 161			45-50	30					F21-20-001-02-VA	F21-20-001-02-HA	T
330 i	06.00 - 02.05	935	1190	E95-20-001-03-22	A, 18, 20, 68, 71, 78, 161			45-50	30					F21-20-001-02-VA	F21-20-001-02-HA	T
Pro-Street-S (Gewindefahrwerke - höhenverstellbar | *Coil-Overs-Adjustable Ride Hight*)																
316 i, 318 d, 318 i, 320 d, 320 i, 325 i, 328 i	10.99 - 02.05	910	1215	PSS65-20-001-01-22	A, 24, 25, 45, 160			40-75	40-75							T
316 i, 318 d, 318 i, 320 d, 320 i, 325 i, 328 i, 330 d, 330 i	10.99 - 02.05	1000	1215	PSS65-20-001-02-22	A, 24, 25, 45, 160			40-75	40-75							T
3 Touring (E91)																
Pro-Kit (Performance Fahrwerksfedern | *Performance Springs*)																
316 i, 318 i, 320 i	09.05 -	935	1135	E10-20-014-05-22	A, 18, 20			30	25					F11-20-013-01-VA	F11-20-013-01-HA	ABE
316 d, 318 d, 320 d, 323 i, 325 i, 330 i	09.05 -	1045	1200	E10-20-014-06-22	A, 18, 20			30	25					F11-20-013-02-VA	F11-20-014-05-HA	ABE
335 i	09.06 -	1090	1200	E10-20-014-07-22	A, 18, 20			20	0					F11-20-014-04-VA	F11-20-014-05-HA	ABE
325 d, 330 d	09.05 -	1090	1200	E10-20-014-07-22	A, 18, 20			30	25					F11-20-014-04-VA	F11-20-014-05-HA	ABE
335 i	09.05 -	1090	1200	E10-20-014-07-22	A, 18, 20			20	0					F11-20-014-04-VA	F11-20-014-05-HA	ABE
320 d xDrive, 320 xd, 320d xDrive, 325 i xDrive, 325 xi, 330 i xDrive, 330 xi	09.05 -	1045	1200	E10-20-014-10-22	A, 18			30	25					F11-20-013-02-VA	F11-20-014-10-HA	ABE
335 i xDrive, 335 xi	09.07 -	1090	1200	E10-20-014-11-22	A, 18			20	10					F11-20-014-04-VA	F11-20-014-10-HA	ABE
330 xd	11.05 -	1090	1200	E10-20-014-11-22	A, 18			30	25					F11-20-014-04-VA	F11-20-014-10-HA	ABE
Sportline (Performance Fahrwerksfedern Sport | *Sport Performance Springs*)																
316 i, 318 i, 320 i	09.05 -	935	1135	E20-20-014-03-22	A, 18, 20			45-50	35					F21-20-013-01-VA	F21-20-013-01-HA	ABE
316 d, 318 d, 320 d, 323 i, 325 i, 330 i	09.05 -	955	1175	E20-20-014-04-22	A, 18, 20			45-50	35					F21-20-013-02-VA	F21-20-014-03-HA	ABE
Anti-Roll-Kit (Performance Stabilisatoren | *Performance Sway Bars*)																
316 i, 318 i, 320 i, 323 i, 325 i, 330 i, 335 i, 316 d, 318 d, 320 d, 325 d, 330 d, 335 d	09.05 -			E40-20-013-01-11	A, 18, 20, 22, 45					28	15	nicht verstellbar *not adjustable*	nicht verstellbar *not adjustable*	AS41-20-013-01-VA	AS41-20-013-01-HA	T
B12 Pro-Kit (Performance Komplettfahrwerke | *Performance Springs+Shocks*)																
316 i, 318 i, 320 i	09.05 -	935	1135	E90-20-014-05-22	A, 18, 20, 78, 161			30	25					F11-20-013-01-VA	F11-20-013-01-HA	ABE
316 d, 318 d, 320 d, 323 i, 325 i, 330 i	09.05 -	1045	1200	E90-20-014-06-22	A, 18, 20, 78, 161			30	25					F11-20-013-02-VA	F11-20-014-05-HA	ABE
320 d xDrive, 320 xd, 320d xDrive, 325 i xDrive, 325 xi, 330 i xDrive, 330 xi	09.05 -	1045	1200	E90-20-014-10-22	A, 18, 78, 161			30	25					F11-20-013-02-VA	F11-20-014-10-HA	ABE
325 d, 330 d, 335 d, 335 i	09.05 -	1090	1200	E90-20-014-07-22	A, 18, 20, 78, 161			30	25					F11-20-014-04-VA	F11-20-014-05-HA	ABE
330 xDrive, 330 xd, 335 i xDrive, 335 xi	09.05 -	1090	1200	E90-20-014-11-22	A, 18, 78, 161			30	25					F11-20-014-04-VA	F11-20-014-10-HA	ABE
B12 Sportline (Performance Komplettfahrwerke Sport | *Sport Performance Springs+Shocks*)																
316 i, 318 i, 320 i	09.05 -	935	1135	E95-20-014-03-22	A, 18, 20, 78, 161			45-50	35					F21-20-013-01-VA	F21-20-013-01-HA	ABE
316 d, 318 d, 320 d, 323 i, 325 i, 330 i, 335 i	09.05 -	955	1175	E95-20-014-04-22	A, 18, 20, 78, 161			45-50	35					F21-20-013-02-VA	F21-20-014-03-HA	ABE
Pro-Street-S (Gewindefahrwerke - höhenverstellbar | *Coil-Overs-Adjustable Ride Hight*)																
316 i, 318 i, 320 i, 323 i, 325 i, 330 i, 318 d, 320 d	09.05 -	1020	1200	PSS65-20-014-02-22	A, 18, 20, 24, 25, 45, 160			30-60	30-60							T
3 Touring (F31)																
Pro-Kit (Performance Fahrwerksfedern | *Performance Springs*)																
316 i, 318 i, 320 i, 328 i, 330 i, 316 d, 318 d, 320 d, 325 d	06.12 -	965	1280	E10-20-031-03-22	A, 18, 20	06		25-30	25					F11-20-031-01-VA	F11-20-031-03-HA	T
335 i, 340 i, 325 d, 330 d	06.12 -	1010	1280	E10-20-031-04-22	A, 18, 20	06		25-30	25					F11-20-031-02-VA	F11-20-031-03-HA	T
320 i xDrive, 318 d xDrive	06.12 -	965	1285	E10-20-031-14-22	A, 18	06		30	15					F11-20-031-01-VA	F11-20-014-14-HA	T
320 i xDrive, 328 i xDrive, 330 i xDrive, 318 d xDrive, 320 d xDrive	06.12 -	1010	1285	E10-20-031-15-22	A, 18	06		30	15					F11-20-031-02-VA	F11-20-014-14-HA	T
335 i xDrive, 340 i xDrive, 330 d xDrive	06.12 -	1050	1285	E10-20-031-16-22	A, 18	06		30	15					F11-20-030-03-VA	F11-20-014-14-HA	T
330 d xDrive, 335 d xDrive	06.12 -	1095	1285	E10-20-031-17-22	A, 18	06		30	15					F11-20-031-06-VA	F11-20-014-14-HA	T
Sportline (Performance Fahrwerksfedern Sport | *Sport Performance Springs*)																
316 i, 318 i, 320 i, 328 i, 330 i, 316 d, 318 d, 320 d, 325 d	06.12 -	960	1280	E20-20-031-02-22	A, 18, 20			40	35					F21-20-031-01-VA	F21-20-031-02-HA	T
Anti-Roll-Kit (Performance Stabilisatoren | *Performance Sway Bars*)																
316 i, 318 i, 320 i, 328 i, 330 i, 316 d, 318 d, 320 d, 325 d, 320 i xDrive, 328 i xDrive, 330 i xDrive, 318 d xDrive, 320 d xDrive	06.12 -			E40-20-031-02-11	A, 18, 20, 22, 45					28 Rohr *28 tube*	16 *16*	2-fach verstellbar *2-way adjustable*	nicht verstellbar *not adjustable*	AS41-20-031-02-VA	AS41-20-031-01-HA	T
335 i, 340 i, 325 d, 330 d, 335i xDrive, 340 i xDrive, 330d xDrive, 335d xDrive	06.12 -			E40-20-031-01-11	A, 18, 20, 22, 45					28 Rohr *28 tube*	16 *16*	2-fach verstellbar *2-way adjustable*	nicht verstellbar *not adjustable*	AS41-20-031-01-VA	AS41-20-031-01-HA	T
Pro-Tronic (Elektronische Performance Fahrwerksmodule | *Electronic Performance Suspension Moduls*)																
Alle Motorisierungen / *all motorisation*	06.12 -			AM65-20-030-01-22	A, 175											
B12 Pro-Kit (Performance Komplettfahrwerke | *Performance Springs+Shocks*)																
316 i, 318 i, 320 i, 328 i, 330 i, 316 d, 318 d, 320 d, 325 d	06.12 -	965	1280	E90-20-031-09-22	A, 18, 20, 78, 161			25-30	25					F11-20-031-01-VA	F11-20-031-03-HA	T
335 i, 340 i, 325 d, 330 d	06.12 -	1010	1280	E90-20-031-10-22	A, 18, 20, 78, 161			25-30	25					F11-20-031-02-VA	F11-20-031-03-HA	T
B12 Sportline (Performance Komplettfahrwerke Sport | *Sport Performance Springs+Shocks*)																
316 i, 318 i, 320 i, 328 i, 330 i, 316 d, 318 d, 320 d, 325 d	06.12 -	960	1280	E95-20-031-02-22	A, 18, 20, 78, 161			40	35					F21-20-031-01-VA	F21-20-031-02-HA	T

BMW

BMW

Modell	Baujahr	Achslast Vorne kg	Achslast Hinten kg	Artikel-Nr.	Hinweise	ab Nachtrag ...xx BE	bis Nachtrag ...xx BE	ca. Tieferl. Vorne mm	ca. Tieferl. Hinten mm	Ø Vorne mm	Ø Hinten mm	Verstellbarkeit Vorne	Verstellbarkeit Hinten	Ersatzteilbez. Vorne	Ersatzteilbez. Hinten	Gutachten
Model	*Year*	*Front Axle Load kg*	*Rear Axle Load kg*	*Part-No.*	*Notes*	*from suppl. ...xx of type approval*	*to suppl. ...xx of type approval*	*ca. Lowering Front mm*	*ca. Lowering Rear mm*	*Ø Front mm*	*Ø Rear mm*	*Adjustable Front*	*Adjustable Rear*	*Spare Part Marking Front*	*Spare Part Marking Rear*	*Homologation*
3 Touring (F31)																
Pro-Street-S (Gewindefahrwerke - höhenverstellbar | *Coil-Overs-Adjustable Ride Hight*)																
316 i, 320 i, 328 i, 316 d, 318 d, 320 d, 335 i, 325 d, 330 d	06.12 -	913	1225	PSS65-20-031-09-22	A, 20, 21, 24, 25, 45, 160			40-65	30-55							T
316 i, 320 i, 328 i, 316 d, 318 d, 320 d, 335 i, 325 d, 330 d	06.12 -	1020	1265	PSS65-20-031-10-22	A, 20, 21, 24, 25, 45, 160			40-65	30-55							T
316 i, 320 i, 328 i, 316 d, 318 d, 320 d, 335 i, 325 d, 330 d	06.12 -	913	1265	PSS65-20-031-11-22	A, 20, 24, 25, 45, 160, 176			40-65	30-55							T
316 i, 320 i, 328 i, 316 d, 318 d, 320 d, 335 i, 325 d, 330 d	06.12 -	1020	1265	PSS65-20-031-12-22	A, 20, 24, 25, 45, 160, 176			30-55	15-40							T
4 Cabriolet (F33, F83) ***4 Convertible (F33, F83)***																
Pro-Kit (Performance Fahrwerksfedern | *Performance Springs*)																
420 i, 428 i, 420 d, 425 d	10.13 -	965	1280	E10-20-031-07-22	A, 18, 20	08		20	10					F11-20-031-01-VA	F11-20-014-17-HA	T
435 i, 430 d	10.13 -	1050	1280	E10-20-031-08-22	A, 18	08		20	10					F11-20-031-03-VA	F11-20-014-17-HA	T
425 d	10.13 -	1010	1280	E10-20-031-11-22	A, 18, 20	08		20	10					F11-20-031-02-VA	F11-20-014-17-HA	T
M4	07.14 -	1050	1250	E10-20-031-10-22	A, 18, 20	08		20	15					F11-20-031-10-FA	F11-20-031-10-RA	T
Anti-Roll-Kit (Performance Stabilisatoren | *Performance Sway Bars*)																
420 i, 428 i, 420 d, 425 d	10.13 -			E40-20-031-02-11	A, 18, 20, 22, 45					28 Rohr *28 tube*	16	2-fach verstellbar *2-way adjustable*	nicht verstellbar *not adjustable*	AS41-20-031-02-VA	AS41-20-031-01-HA	T
435 i, 430 i	10.13 -			E40-20-031-01-11	A, 18, 20, 22, 45					28 Rohr *28 tube*	16	2-fach verstellbar *2-way adjustable*	nicht verstellbar *2-way adjustable*	AS41-20-031-01-VA	AS41-20-031-01-HA	T
Pro-Tronic (Elektronische Performance Fahrwerksmodule | *Electronic Performance Suspension Moduls*)																
Alle Motorisierungen / *all motorisation*	10.13 -			AM65-20-030-01-22	A, 175											
B12 Pro-Kit (Performance Komplettfahrwerke | *Performance Springs+Shocks*)																
420 i, 428 i, 420 d, 425 d	10.13 -	965	1280	E90-20-031-07-22	A, 18, 20, 78, 161			20	10					F11-20-031-01-VA	F11-20-014-17-HA	T
435 i, 430 d	10.13 -	1050	1280	E90-20-031-08-22	A, 18, 20, 78, 161			20	10					F11-20-030-03-VA	F11-20-014-17-HA	T
425 d	10.13 -	1010	1280	E90-20-031-11-22	A, 18, 20, 78, 161			20	10					F11-20-031-02-VA	F11-20-014-17-HA	T
M4	07.14 -	1050	1230	E90-20-031-16-22	A, 18, 20, 78, 159, 161			20	15					F11-20-031-10-FA	F11-20-031-10-RA	T
M4	07.14 -	1050	1230	E90-20-031-13-22	A, 18, 20, 78, 161, 176, 203			20	15					F11-20-031-10-FA	F11-20-031-10-RA	T
Pro-Street-S (Gewindefahrwerke - höhenverstellbar | *Coil-Overs-Adjustable Ride Hight*)																
420 i, 428 i, 420 d, 425 d	03.13 -	960	1265	PSS65-20-031-09-22	A, 20, 21, 24, 25, 45, 160			40-65	40-65							T
435 i, 430 d	03.13 -	1025	1265	PSS65-20-031-10-22	A, 20, 21, 24, 25, 45, 160			40-65	40-65							T
420 i, 428 i, 420 d, 425 d	03.13 -	960	1265	PSS65-20-031-11-22	A, 20, 24, 25, 45, 160, 176			40-65	40-65							T
435 i, 430 d	03.13 -	1025	1265	PSS65-20-031-12-22	A, 20, 24, 25, 45, 160, 176			40-65	40-65							T
4 Coupe (F32, F82)																
Pro-Kit (Performance Fahrwerksfedern | *Performance Springs*)																
420 i, 428 i, 418 d, 420 d, 425 d	07.13 -	965	1230	E10-20-031-01-22	A, 18, 20	08		15-20	5-10					F11-20-031-01-VA	F11-20-031-01-HA	T
435 i, 430 d, 420 i xDrive, 428 i xDrive, 420 d xDrive	07.13 -	1010	1230	E10-20-031-02-22	A, 18, 20	08		15-20	5-10					F11-20-031-02-VA	F11-20-031-01-HA	T
M4	01.14 -	990	1170	E10-20-031-09-22	A, 18, 20			20	5-10					F11-20-031-09-FA	F11-20-031-09-RA	T
435 i xDrive, 430 d xDrive, 435 d xDrive	07.13 -	1050	1230	E10-20-031-18-22	A, 18, 20	08		15-20	5-10					F11-20-030-03-VA	F11-20-031-01-HA	T
Sportline (Performance Fahrwerksfedern Sport | *Sport Performance Springs*)																
420 i, 428 i, 418 d, 420 d, 425 d	07.13 -	960	1210	E20-20-031-01-22	A, 18, 20	08		25	20					F21-20-031-01-VA	F21-20-031-01-HA	T
Anti-Roll-Kit (Performance Stabilisatoren | *Performance Sway Bars*)																
420 i, 428 i, 418 d, 420 d, 425 d	07.13 -			E40-20-031-02-11	A, 18, 20, 22, 45					28 Rohr *28 tube*	16	2-fach verstellbar *2-way adjustable*	nicht verstellbar *not adjustable*	AS41-20-031-02-VA	AS41-20-031-01-HA	T
435 i, 430 d	07.13 -			E40-20-031-01-11	A, 18, 20, 22, 45					28 Rohr *28 tube*	16	2-fach verstellbar *2-way adjustable*	nicht verstellbar *not adjustable*	AS41-20-031-01-VA	AS41-20-031-01-HA	T
Pro-Tronic (Elektronische Performance Fahrwerksmodule | *Electronic Performance Suspension Moduls*)																
Alle Motorisierungen / *all motorisation*	07.13 -			AM65-20-030-01-22	A, 175											
B12 Pro-Kit (Performance Komplettfahrwerke | *Performance Springs+Shocks*)																
420 i, 428 i, 418 d, 420 d, 425 d	07.13 -	965	1230	E90-20-031-01-22	A, 18, 20, 78, 161	08		15-20	5-10					F11-20-031-01-VA	F11-20-031-01-HA	T
435 i, 430 d	07.13 -	1010	1230	E90-20-031-02-22	A, 18, 20, 78, 161	08		15-20	5-10					F11-20-031-02-VA	F11-20-031-01-HA	T
B12 Sportline (Performance Komplettfahrwerke Sport | *Sport Performance Springs+Shocks*)																
420 i, 428 i, 418 d, 420 d, 425 d	07.13 -	960	1210	E95-20-031-01-22	A, 18, 20, 78, 161	08		25	20					F21-20-031-01-VA	F21-20-031-01-HA	T
Pro-Street-S (Gewindefahrwerke - höhenverstellbar | *Coil-Overs-Adjustable Ride Hight*)																
420 i, 428 i, 418 d, 420 d, 425 d	07.13 -	950	1230	PSS65-20-031-01-22	A, 18, 20, 21, 24, 25, 45, 160			40-65	30-60							T
435 i, 430 d	07.13 -	1090	1230	PSS65-20-031-02-22	A, 18, 20, 21, 24, 25, 45, 160			40-65	30-60							T
420 i, 428 i, 418 d, 420 d, 425 d	07.13 -	950	1230	PSS65-20-031-03-22	A, 18, 20, 24, 25, 45, 160, 176			40-65	30-60							T
435 i, 430 d	07.13 -	1090	1230	PSS65-20-031-04-22	A, 18, 20, 24, 25, 45, 160, 176			40-65	30-60							T
420 i xDrive, 428 i xDrive, 435 i xDrive, 420 d xDrive, 430 d xDrive, 435 d xDrive	07.13 -	1000	1175	PSS65-20-031-07-22	A, 18, 24, 25, 45, 160, 177			30-60	35-60							T
420 i xDrive, 428 i xDrive, 435 i xDrive, 420 d xDrive, 430 d xDrive, 435 d xDrive	07.13 -	1090	1175	PSS65-20-031-08-22	A, 18, 24, 25, 45, 160, 177			30-60	35-60							T
4 Gran Coupé (F36)																
Pro-Kit (Performance Fahrwerksfedern | *Performance Springs*)																
418i, 420 i, 428 i, 418 d, 420 d	03.14 -	965	1280	E10-20-031-03-22	A, 18, 20	08		20-25	5-10					F11-20-031-01-VA	F11-20-031-03-HA	T
435 i, 430 d, 420 i xDrive, 428 i xDrive, 420 d xDrive	03.14 -	1010	1280	E10-20-031-04-22	A, 18	08		25	20					F11-20-031-02-VA	F11-20-031-03-HA	T

BMW

Modell	Baujahr	Achslast Vorne kg	Achslast Hinten kg	Artikel-Nr.	Hinweise	ab Nachtrag ...xx BE	bis Nachtrag ...xx BE	ca. Tieferl. Vorne mm	ca. Tieferl. Hinten mm	Ø Vorne mm	Ø Hinten mm	Verstellbarkeit Vorne	Verstellbarkeit Hinten	Ersatzteilbez. Vorne	Ersatzteilbez. Hinten	Gutachten
Model	*Year*	*Front Axle Load kg*	*Rear Axle Load kg*	*Part-No.*	*Notes*	*from suppl. ...xx of type approval*	*to suppl. ...xx of type approval*	*ca. Lowering Front mm*	*ca. Lowering Rear mm*	*Ø Front mm*	*Ø Rear mm*	*Adjustable Front*	*Adjustable Rear*	*Spare Part Marking Front*	*Spare Part Marking Rear*	*Homologation*
4 Gran Coupé (F36)																
Pro-Kit (Performance Fahrwerksfedern | *Performance Springs*)																
435 i xDrive, 430 d xDrive	03.14 -	1050	1280	E10-20-031-05-22	A, 18	08		25	20					F11-20-030-03-VA	F11-20-031-03-HA	T
435 d xDrive	03.14 -	1095	1280	E10-20-031-06-22	A, 18	08		25	20					F11-20-031-06-VA	F11-20-031-03-HA	T
Anti-Roll-Kit (Performance Stabilisatoren | *Performance Sway Bars*)																
435 i, 430 d	03.14 -			E40-20-031-01-11	A, 18, 20, 22, 45					28 Rohr *28 tube*	16	2-fach verstellbar *2-way adjustable*	nicht verstellbar *not adjustable*	AS41-20-031-01-VA	AS41-20-031-01-HA	T
418i, 420 i, 428 i, 418 d, 420 d	03.14 -			E40-20-031-02-11	A, 18, 20, 22, 45					28 Rohr *28 tube*	16	2-fach verstellbar *2-way adjustable*	nicht verstellbar *not adjustable*	AS41-20-031-02-VA	AS41-20-031-01-HA	T
Pro-Tronic (Elektronische Performance Fahrwerksmodule | *Electronic Performance Suspension Moduls*)																
Alle Motorisierungen / *all motorisation*	03.14 -			AM65-20-030-01-22	A, 175											
B12 Pro-Kit (Performance Komplettfahrwerke | *Performance Springs+Shocks*)																
418 i, 420 i, 428 i, 418 d, 420 d	03.14 -	965	1280	E90-20-031-09-22	A, 18, 20, 78, 161					20	10			F11-20-031-01-VA	F11-20-031-03-HA	T
435 i, 430 d	03.14 -	1010	1280	E90-20-031-14-22	A, 18, 78, 161					20	10			F11-20-031-02-VA	F11-20-031-03-HA	T
420 i xDrive, 428 i xDrive, 420 d xDrive	03.14 -	1010	1280	E90-20-031-15-22	A, 18, 78, 161					20	10			F11-20-031-02-VA	F11-20-031-03-HA	T
435 i xDrive, 430 d xDrive, 435 d xDrive	03.14 -	1095	1280	E90-20-031-06-22	A, 18, 78, 161					20	10			F11-20-031-06-VA	F11-20-031-03-HA	T
Pro-Street-S (Gewindefahrwerke - höhenverstellbar | *Coil-Overs-Adjustable Ride Hight*)																
418 i, 420 i, 428 i, 418 d, 420 d	03.14 -	950	1265	PSS65-20-031-09-22	A, 20, 21, 24, 25, 45, 160			40-65	40-65							T
435 i, 430 d	03.14 -	1015	1265	PSS65-20-031-10-22	A, 20, 21, 24, 25, 45, 160			40-65	40-65							T
418 i, 420 i, 428 i, 418 d, 420 d	03.14 -	950	1265	PSS65-20-031-11-22	A, 20, 24, 25, 45, 160, 176			40-65	40-65							T
435 i, 430 d	03.14 -	1015	1265	PSS65-20-031-12-22	A, 20, 24, 25, 45, 160, 176			40-65	40-65							T
5 (E34)																
Pro-Kit (Performance Fahrwerksfedern | *Performance Springs*)																
518 i, 520 i, 520 i 24V, 525 i, 525 i 24V	01.88 - 09.95	970	1300	E2014-140	A, 18, 20			25-35	20-30					F2014001	F2013002	ABE
524 td, 525 td, 525 tds, 530 i, 530 i V8, 535 i, 540 i V8	01.88 - 09.95	1060	1300	E2013-140	A, 18, 20			25-35	20-30					F2013101	F2013002	ABE
Sportline (Performance Fahrwerksfedern Sport | *Sport Performance Springs*)																
518 i, 520 i, 520 i 24V, 524 td, 525 i, 525 i 24V, 525 td, 525 tds, 530 i, 535 i	01.88 - 09.95	975	1300	E20-20-003-01-22	A, 18, 20			45-50	30					F21-20-003-01-VA	F21-20-003-01-HA	T
B12 Pro-Kit (Performance Komplettfahrwerke | *Performance Springs+Shocks*)																
518 i, 520 i, 520 i 24V, 525 i 24V	01.88 - 09.95	970	1300	E90-20-003-01-22	A, 18, 20, 78, 161			25-35	20-30					F2014001	F2013002	ABE
525 i, 525 i 24V	01.88 - 07.90	970	1300	E90-20-003-02-22	A, 18, 20, 78, 161			25-35	20-30					F2014001	F2013002	ABE
525 i, 525 i 24V	08.90 - 09.92	970	1300	E90-20-003-03-22	A, 18, 20, 78, 161			25-35	20-30					F2014001	F2013002	ABE
524 td, 525 tds, 530 i, 535 i	01.88 - 09.95	1060	1300	E90-20-003-06-22	A, 18, 20, 78, 131, 161			25-35	20-30					F2013101	F2013002	ABE
524 td, 525 td, 525 tds	03.88 - 09.95	1060	1300	E90-20-003-04-22	A, 18, 20, 78, 132, 161			25-35	20-30					F2013101	F2013002	ABE
524 td, 530 i, 535 i	01.88 - 07.90	1060	1300	E90-20-003-05-22	A, 18, 20, 78, 161			25-35	20-30					F2013101	F2013002	ABE
B12 Sportline (Performance Komplettfahrwerke Sport | *Sport Performance Springs+Shocks*)																
518 i, 520 i, 520 i 24V, 525 i 24V, 525 td, 525 tds	01.88 - 09.95	975	1300	E95-20-003-01-22	A, 18, 20, 78, 161			45-50	30					F21-20-003-01-VA	F21-20-003-01-HA	T
524 td, 525 i, 525 i 24V, 530 i, 535 i	01.88 - 07.90	975	1300	E95-20-003-02-22	A, 18, 20, 78, 161			45-50	30					F21-20-003-01-VA	F21-20-003-01-HA	T
524 td, 525 i, 525 i 24V, 525 tds, 530 i, 535 i	01.88 - 09.95	975	1300	E95-20-003-03-22	A, 18, 20, 78, 161			45-50	30					F21-20-003-01-VA	F21-20-003-01-HA	T
5 (E39)																
Pro-Kit (Performance Fahrwerksfedern | *Performance Springs*)																
520 d, 520 i, 523 i, 525 i, 525 td, 525 tds, 528 i, 530 i	11.95 - 06.03	1065	1290	E2053-140	A, 12, 18, 20, 21			30	20-25					F2067001	F2053002	T
525 d, 530 d	08.98 - 06.03	1100	1290	E2069-140	A, 12, 18, 20, 21			30	20-25					F2069001	F2053002	T
535 i, 540 i	04.96 - 06.03	1110	1290	E2063-140	A, 20, 21			30	20-25					F2054001	F2063002	T
Sportline (Performance Fahrwerksfedern Sport | *Sport Performance Springs*)																
520 d, 520 i, 523 i, 525 i, 525 td, 525 tds, 528 i, 530 i	11.95 - 06.03	1040	1170	E20-20-005-01-22	A, 20, 21, 68			45-50	30					F21-20-005-01-VA	F21-20-005-01-HA	T
Anti-Roll-Kit (Performance Stabilisatoren | *Performance Sway Bars*)																
520 d, 520 i, 523 i, 525 d, 525 i, 525 td, 525 tds, 528 i, 530 d, 530 i	11.95 - 06.03			E2053-320	A, 18, 20, 22, 45					27	18	2-fach verstellbar *2-way adjustable*	nicht verstellbar *not adjustable*	AS2053320VA	AS2053320HA	T
535 i, 540 i	04.96 - 06.03			E2054-320	A, 18, 20, 22, 45					28	18	nicht verstellbar *not adjustable*	nicht verstellbar *not adjustable*	AS2054320VA	AS2053320HA	T
B12 Pro-Kit (Performance Komplettfahrwerke | *Performance Springs+Shocks*)																
520 d, 520 i, 523 i, 525 i, 525 td, 525 tds, 528 i, 530 i	11.95 - 06.03	1065	1290	E90-20-005-01-22	A, 12, 18, 20, 21, 78, 161			30	20-25					F2067001	F2053002	T
525 d, 530 d	08.98 - 06.03	1100	1290	E90-20-005-02-22	A, 12, 18, 20, 21, 78, 161			30	20-25					F2069001	F2053002	T
535 i, 540 i	04.96 - 06.03	1100	1290	E90-20-005-03-22	A, 18, 20, 21, 78, 161			30	20-25					F2054001	F2063002	T
B12 Sportline (Performance Komplettfahrwerke Sport | *Sport Performance Springs+Shocks*)																
520 d, 520 i, 523 i, 525 i, 525 td, 525 tds, 528 i, 530 i	11.95 - 06.03	1040	1170	E95-20-005-01-22	A, 18, 20, 21, 68, 78, 161			45-50	30					F21-20-005-01-VA	F21-20-005-01-HA	T
Pro-Street-S (Gewindefahrwerke - höhenverstellbar | *Coil-Overs-Adjustable Ride Hight*)																
520 d, 520 i, 523 i, 525 d, 525 i, 525 td, 525 tds, 528 i, 530 i	11.95 - 06.03	1020	1200	PSS65-20-005-01-22	A, 18, 20, 23, 25, 36, 45, 160			35-65	35-65							T
520 d, 520 i, 523 i, 525 d, 525 i, 525 td, 525 tds, 528 i, 530 i, 530 d, 535 i, 540 i	11.95 - 06.03	1090	1200	PSS65-20-005-02-22	A, 18, 20, 23, 25, 36, 45, 160			35-65	35-65							T

BMW

Modell *Model*	Baujahr *Year*	Achslast Vorne kg *Front Axle Load kg*	Achslast Hinten kg *Rear Axle Load kg*	Artikel-Nr. *Part-No.*	Hinweise *Notes*	ab Nachtrag ...xx BE *from suppl. ...xx of type approval*	bis Nachtrag ...xx BE *to suppl. ...xx of type approval*	ca. Tieferl. Vorne mm *ca. Lowering Front mm*	ca. Tieferl. Hinten mm *ca. Lowering Rear mm*	Ø Vorne mm *Ø Front mm*	Ø Hinten mm *Ø Rear mm*	Verstellbarkeit Vorne *Adjustable Front*	Verstellbarkeit Hinten *Adjustable Rear*	Ersatzteilbez. Vorne *Spare Part Marking Front*	Ersatzteilbez. Hinten *Spare Part Marking Rear*	Gutachten *Homologation*
5 (E60)																
Pro-Kit (Performance Fahrwerksfedern | *Performance Springs*)																
520 d, 520 i, 523 i, 525 i, 530 i, 535 i	07.03 - 03.10	990	1245	E10-20-011-01-22	A, 18, 20, 21			30	30					F2067001	F11-20-011-01-HA	T
525 d, 530 d, 535 d	07.03 - 03.10	1070	1245	E10-20-011-02-22	A, 18, 20, 21			30	30					F2069001	F11-20-011-01-HA	T
540 i, 545 i, 550 i	09.03 - 03.10	1070	1275	E10-20-011-03-22	A, 18, 20, 21			30	30					F2069001	F11-20-011-03-HA	T
M	09.04 - 03.10	1090	1270	E10-20-011-06-22	A, 18, 20			30	15					F11-20-011-06-VA	F11-20-011-06-HA	T
Sportline (Performance Fahrwerksfedern Sport | *Sport Performance Springs*)																
520 d, 520 i, 523 i, 525 i, 530 i, 535 i	07.03 - 03.10	990	1300	E20-20-011-01-22	A, 18, 20, 21			45-50	30					F21-20-005-01-VA	F21-20-011-01-HA	T
525 d, 530 d, 535 d, 540 i, 545 i, 550 i	07.03 - 03.10	1070	1300	E20-20-011-02-22	A, 18, 20, 21			45-50	30					F21-20-011-02-VA	F21-20-011-01-HA	T
Anti-Roll-Kit (Performance Stabilisatoren | *Performance Sway Bars*)																
520 d, 520 i, 523 i, 525 d, 525 i, 530 d, 530 i, 535 i, 535 d, 540 i, 545 i, 550 i	07.03 - 03.10			E40-20-011-01-11	A, 18, 20, 22, 45					26	16	nicht verstellbar *not adjustable*	3-fach verstellbar *3-way adjustable*	AS41-20-011-01-VA	AS41-20-011-01-HA	T
B12 Pro-Kit (Performance Komplettfahrwerke | *Performance Springs+Shocks*)																
520 d, 520 i, 523 i, 525 i, 530 i, 535 i	07.03 - 03.10	990	1245	E90-20-011-01-22	A, 18, 20, 21, 78, 161			30	30					F2067001	F11-20-011-01-HA	T
525 d, 530 d, 535 d	07.03 - 03.10	1070	1245	E90-20-011-02-22	A, 18, 20, 21, 78, 161			30	30					F2069001	F11-20-011-01-HA	T
540 i, 545 i, 550 i	09.03 - 03.10	1070	1275	E90-20-011-03-22	A, 18, 20, 21, 78, 161			30	30					F2069001	F11-20-011-03-HA	T
B12 Sportline (Performance Komplettfahrwerke Sport | *Sport Performance Springs+Shocks*)																
520 d, 520 i, 523 i, 525 i, 530 i, 535 i	07.03 - 03.10	990	1300	E95-20-011-01-22	A, 18, 20, 21, 78, 161			45-50	30					F21-20-005-01-VA	F21-20-011-01-HA	T
525 d, 530 d, 535 d, 540 i, 545 i, 550 i	07.03 - 03.10	1070	1300	E95-20-011-02-22	A, 18, 20, 21, 78, 161			45-50	30					F21-20-011-02-VA	F21-20-011-01-HA	T
Pro-Street-S (Gewindefahrwerke - höhenverstellbar | *Coil-Overs-Adjustable Ride Hight*)																
520 d, 520 i, 523 i, 525 d, 525 i, 530 d, 530 i, 535 d, 535 i, 540 i, 545 i, 550 i	07.03 - 03.10	1070	1235	PSS65-20-011-01-22	A, 18, 20, 25, 45, 160			25-55	25-55							T
5 (F10, F18)																
Pro-Kit (Performance Fahrwerksfedern | *Performance Springs*)																
518 d, 520 d, 520 i, 523 i, 528 i, 530 i	03.10 -	1070	1310	E10-20-022-01-22	A, 18, 20			30	30					F11-20-022-01-VA	F11-20-022-01-HA	T
518 d, 520 d, 520 i, 523 i, 528 i, 530 i	03.10 -	1070	1410	E10-20-022-04-20	A			30	25					F11-20-022-01-VA	Luftfederverstellung *air suspension*	T
520 d xDrive, 525 d xDrive, 528 i xDrive, 535 i xDrive	03.10 -	1170	1340	E10-20-022-01-22	A			30	30					F11-20-022-01-VA	F11-20-022-01-HA	T
520 d xDrive, 525 d xDrive, 528 i xDrive, 535 i xDrive	03.10 -	1170	1410	E10-20-022-04-20	A			30	25					F11-20-022-01-VA	Luftfederverstellung *air suspension*	T
M	06.11 -	1180	1260	E10-20-022-09-22	A, 18, 20			25	25					F11-20-022-09-VA	F11-20-022-09-HA	T
525 d, 530 d, 535 d, 535 i	03.10 -	1200	1310	E10-20-022-02-22	A, 18, 20			30	30					F11-20-022-02-VA	F11-20-022-01-HA	T
525 d, 530 d, 535 d, 535 i	03.10 -	1200	1410	E10-20-022-05-20	A			30	25					F11-20-022-02-VA	Luftfederverstellung *air suspension*	T
550 i	03.10 -	1250	1340	E10-20-022-03-22	A, 18, 20			30	30					F11-20-022-03-VA	F11-20-022-03-HA	T
530 d xDrive, 535 d xDrive, 550 i xDrive, M 550 d xDrive	09.10 -	1250	1340	E10-20-022-02-22	A			30	30					F11-20-022-02-VA	F11-20-022-01-HA	T
550 i	03.10 -	1250	1410	E10-20-022-08-20	A			30	25					F11-20-022-03-VA	Luftfederverstellung *air suspension*	T
530 d xDrive, 535 d xDrive, 550 i xDrive, M 550 d xDrive	09.10 -	1250	1410	E10-20-022-05-20	A			30	25					F11-20-022-02-VA	Luftfederverstellung *air suspension*	T
Pro-Tronic (Elektronische Performance Fahrwerksmodule | *Electronic Performance Suspension Moduls*)																
Alle Motorisierungen / *all motorisation*	03.10 -			AM65-20-022-01-22	A, 175											
B12 Pro-Kit (Performance Komplettfahrwerke | *Performance Springs+Shocks*)																
520 i, 523 i, 528 i, 530 i, 518 d, 520 d	03.10 -	1070	1310	E90-20-022-01-22	A, 18, 20, 21, 78, 161			30	30					F11-20-022-01-VA	F11-20-022-01-HA	T
535 i, 525 d, 530 d, 535 d	03.10 -	1200	1310	E90-20-022-02-22	A, 18, 20, 21, 78, 161			30	30					F11-20-022-02-VA	F11-20-022-01-HA	T
550 i	03.10 -	1250	1340	E90-20-022-03-22	A, 18, 20, 21, 78, 161			30	30					F11-20-022-03-VA	F11-20-022-03-HA	T
5 GRAN TURISMO (F07)																
Pro-Kit (Performance Fahrwerksfedern | *Performance Springs*)																
530 d, 530 d xDrive, 535 d, 535 d xDrive, 535 i, 535 i xDrive	10.09 -	1235	1500	E10-20-018-03-20	A			25	10-15					F11-20-018-01-VA	Luftfederverstellung *air suspension*	T
550 i, 550 i xDrive	10.09 -	1340	1500	E10-20-018-04-20	A			25	10-15					F11-20-018-02-VA	Luftfederverstellung *air suspension*	T
5 Touring (E34)																
Pro-Kit (Performance Fahrwerksfedern | *Performance Springs*)																
518 g, 518 i, 520 i, 525 i	11.91 - 01.97	970	1300	E2014-140	A, 18, 20			25-35	20-30					F2014001	F2013002	ABE
525 td, 525 tds, 530 i V8, 540 i	12.91 - 01.97	1060	1300	E2013-140	A, 18, 20			25-35	20-30					F2013101	F2013002	ABE
B12 Pro-Kit (Performance Komplettfahrwerke | *Performance Springs+Shocks*)																
518 i, 520 i, 525 i	11.91 - 01.97	970	1300	E90-20-003-01-22	A, 18, 20, 78, 161			25-35	20-30					F2014001	F2013002	ABE
525 td, 525 tds, 530 i V8, 540 i	12.91 - 01.97	1060	1300	E90-20-003-06-22	A, 18, 20, 78, 161			25-35	20-30					F2013101	F2013002	ABE
5 Touring (E39)																
Pro-Kit (Performance Fahrwerksfedern | *Performance Springs*)																
520 d, 520 i, 523 i, 525 i, 525 tds, 528 i, 530 i	01.97 - 05.04	1065	1390	E2061-140	A, 12, 18, 20, 21			30	25-30					F2067001	F2061002	T
520 d, 520 i, 523 i, 525 i, 525 tds, 528 i, 530 i	01.97 - 05.04	1065	1390	E2064-120	A, 20, 21			30	25					F2067001	Luftfederverstellung *air suspension*	T
525 d, 530 d	08.98 - 05.04	1100	1390	E2070-140	A, 12, 18, 20, 21			30	25-30					F2069001	F2061002	T
525 d, 530 d	08.98 - 05.04	1100	1390	E2071-120	A, 12, 20, 21			30	25					F2069001	Luftfederverstellung *air suspension*	T
540 i	01.97 - 05.04	1100	1390	E2065-120	A, 20, 21			30	25					F2054001	Luftfederverstellung *air suspension*	T

BMW

Modell *Model*	Baujahr *Year*	Achslast Vorne kg *Front Axle Load kg*	Achslast Hinten kg *Rear Axle Load kg*	Artikel-Nr. *Part-No.*	Hinweise *Notes*	ab Nachtrag ...xx BE *from suppl. ...xx of type approval*	bis Nachtrag ...xx BE *to suppl. ...xx of type approval*	ca. Tieferl. Vorne mm *ca. Lowering Front mm*	ca. Tieferl. Hinten mm *ca. Lowering Rear mm*	Ø Vorne mm *Ø Front mm*	Ø Hinten mm *Ø Rear mm*	Verstellbarkeit Vorne *Adjustable Front*	Verstellbarkeit Hinten *Adjustable Rear*	Ersatzteilbez. Vorne *Spare Part Marking Front*	Ersatzteilbez. Hinten *Spare Part Marking Rear*	Gutachten *Homologation*
5 Touring (E39)																
Anti-Roll-Kit (Performance Stabilisatoren | *Performance Sway Bars*)																
520 d, 520 i, 523 i, 525 d, 525 i, 525 tds, 528 i, 530 d, 530 i	01.97 - 05.04			E2053-320	A, 18, 20, 22, 45					27	18	2-fach verstellbar *2-way adjustable*	nicht verstellbar *not adjustable*	AS2053320VA	AS2053320HA	T
540 i	01.97 - 05.04			E2054-320	A, 18, 20, 22, 45					28	18	nicht verstellbar *not adjustable*	nicht verstellbar *not adjustable*	AS2054320VA	AS2053320HA	T
B12 Pro-Kit (Performance Komplettfahrwerke | *Performance Springs+Shocks*)																
520 d, 520 i, 523 i, 525 i, 525 tds, 528 i, 530 i	01.97 - 05.04	1065	1390	E90-20-005-04-22	A, 12, 18, 20, 21, 76, 78, 161			30	25					F2067001	F2061002	T
520 d, 520 i, 523 i, 525 i, 525 tds, 528 i, 530 i	01.97 - 05.04	1065	1390	E90-20-005-05-20	A, 20, 21, 78, 85, 161			30	25					F2067001	BI-35-114079	T
525 d, 530 d	08.98 - 05.04	1100	1390	E90-20-005-06-22	A, 12, 18, 20, 21, 76, 78, 161			30	25-30					F2069001	F2061002	T
525 d, 530 d	08.98 - 05.04	1100	1390	E90-20-005-07-20	A, 20, 21, 78, 85, 161			30	25					F2069001	BI-35-114079	T
540 i	01.97 - 05.04	1100	1390	E90-20-005-08-20	A, 20, 21, 78, 85, 161			30	25					F2054001	BI-35-114093	T
5 Touring (E61)																
Pro-Kit (Performance Fahrwerksfedern | *Performance Springs*)																
520 d, 520 i, 523 i, 525 i, 530 i	06.04 -	990	1300	E10-20-011-04-20	A, 20			30	30					F2067001	Luftfederverstellung *air suspension*	T
525 d, 530 d, 535 d, 545 i, 550 i	06.04 -	1070	1300	E10-20-011-05-20	A, 20			30	30					F2069001	Luftfederverstellung	T
B12 Pro-Kit (Performance Komplettfahrwerke | *Performance Springs+Shocks*)																
520 d, 520 i, 523 i, 525 i, 530 i	06.04 -	990	1300	E90-20-011-04-20	A, 20, 21, 78, 161			30	30					F2067001	BI-35-109655	T
525 d, 530 d, 535 d, 545 i, 550 i	06.04 -	1070	1300	E90-20-011-05-20	A, 20, 21, 78, 161			30	30					F2069001	BI-35-109655	T
Pro-Street-S (Gewindefahrwerke - höhenverstellbar | *Coil-Overs-Adjustable Ride Hight*)																
520 d, 520 i, 523 i, 525 d, 525 i, 530 d, 530 i, 535 d, 545 i, 550 i	06.04 -	1070	1300	PSS65-20-011-02-22	A, 18, 20, 25, 45, 160			25-45	25-45							T
5 Touring (F11)																
Pro-Kit (Performance Fahrwerksfedern | *Performance Springs*)																
520 i, 523 i, 528 i, 530 i, 518 d, 520 d	09.10 -	1070	1410	E10-20-022-04-20	A			30	25					F11-20-022-01-VA	Luftfederverstellung *air suspension*	T
528 i xDrive; 535 i xDrive; 520 d xDrive; 525 d xDrive; 530 d xDrive	09.10 -	1170	1410	E10-20-022-04-20	A			30	25					F11-20-022-01-VA	Luftfederverstellung *air suspension*	T
535 i, 525 d, 530 d, 535 d	09.10 -	1200	1410	E10-20-022-05-20	A			30	25					F11-20-022-02-VA	Luftfederverstellung *air suspension*	T
550 i xDrive, M550 d xDrive	09.10 -	1250	1410	E10-20-022-05-20	A			30	25					F11-20-022-02-VA	Luftfederverstellung *air suspension*	T
550 i	09.10 -	1250	1410	E10-20-022-08-20	A			30	25					F11-20-022-03-VA	Luftfederverstellung *air suspension*	T
Pro-Tronic (Elektronische Performance Fahrwerksmodule | *Electronic Performance Suspension Moduls*)																
Alle Motorisierungen / *all motorisation*	09.10 -			AM65-20-022-01-22	A, 175											
B12 Pro-Kit (Performance Komplettfahrwerke | *Performance Springs+Shocks*)																
520i, 523i, 528i, 530i, 518d, 520d	09.10 -	1070	1410	E90-20-022-08-20	A, 20, 21, 78, 161			30	25					F11-20-022-01-VA	BI-24-178501	T
535i, 525d, 530d, 535d	09.10 -	1200	1410	E90-20-022-09-20	A, 20, 21, 78, 161			30	25					F11-20-022-02-VA	BI-24-178501	T
6 (E63)																
Pro-Kit (Performance Fahrwerksfedern | *Performance Springs*)																
630 i	09.04 -	980	1170	E10-20-012-04-22	A, 18, 20			25	20					F11-20-012-04-VA	F11-20-012-01-HA	T
635 d, 645 Ci, 650 i	01.04 -	1070	1170	E10-20-012-01-22	A, 18, 20			30	25-30					F11-20-012-01-VA	F11-20-012-01-HA	T
M	09.05 -	1120	1200	E10-20-012-03-22	A, 18, 20			25	15					F11-20-012-03-VA	F11-20-012-03-HA	T
B12 Pro-Kit (Performance Komplettfahrwerke | *Performance Springs+Shocks*)																
630 i	09.04 -	980	1170	E90-20-012-04-22	A, 18, 20, 78, 161			25	20					F11-20-012-04-VA	F11-20-012-01-HA	T
635 d, 645 Ci, 650 i	01.04 -	1070	1170	E90-20-012-01-22	A, 18, 20, 78, 161			30	25-30					F11-20-012-01-VA	F11-20-012-01-HA	T
6 Cabriolet (E64) ***6 Convertible (E64)***																
Pro-Kit (Performance Fahrwerksfedern | *Performance Springs*)																
630 i	09.04 -	1070	1270	E10-20-012-05-22	A, 18, 20			25	20					F11-20-012-01-VA	F11-20-012-02-HA	T
635 d, 645 Ci, 650 i	04.04 -	1100	1270	E10-20-012-02-22	A, 18, 20			30	25-30					F11-20-012-02-VA	F11-20-012-02-HA	T
B12 Pro-Kit (Performance Komplettfahrwerke | *Performance Springs+Shocks*)																
630 i	09.04 -	1070	1270	E90-20-012-05-22	A, 18, 20, 78, 161			25	20					F11-20-012-01-VA	F11-20-012-02-HA	T
635 d, 645 Ci, 650 i	04.04 -	1100	1270	E90-20-012-02-22	A, 18, 20, 78, 161			30	25-30					F11-20-012-02-VA	F11-20-012-02-HA	T
6 Cabriolet (F12) ***6 Convertible (F12)***																
Pro-Kit (Performance Fahrwerksfedern | *Performance Springs*)																
640 i, 640 d	03.11 -	1140	1350	E10-20-029-01-22	A, 18, 20			25	20					F11-20-029-01-VA	F11-20-029-01-HA	T
640 d xDrive, 640 i xDrive, 650 i, 650 i xDrive	03.11 -	1260	1350	E10-20-029-02-22	A, 18			25	20					F11-20-029-02-VA	F11-20-029-01-HA	T
Pro-Tronic (Elektronische Performance Fahrwerksmodule | *Electronic Performance Suspension Moduls*)																
Alle Motorisierungen / *all motorisation*	03.11 -			AM65-20-022-01-22	A, 175											
B12 Pro-Kit (Performance Komplettfahrwerke | *Performance Springs+Shocks*)																
640 d, 640 i	03.11 -	1140	1350	E90-20-029-01-22	A, 18, 20, 78, 161			25	20					F11-20-029-01-VA	F11-20-029-01-HA	T
6 Coupe (F13)																
Pro-Kit (Performance Fahrwerksfedern | *Performance Springs*)																
640 d, 640 i	11.10 -	1140	1330	E10-20-029-03-22	A, 18, 20			25	20					F11-20-029-01-VA	F11-20-029-03-HA	T
640 d xDrive, 640 i xDrive, 650 i, 650 i xDrive	11.10 -	1260	1330	E10-20-029-04-22	A, 18			25	20					F11-20-029-02-VA	F11-20-029-03-HA	T
Pro-Tronic (Elektronische Performance Fahrwerksmodule | *Electronic Performance Suspension Moduls*)																
Alle Motorisierungen / *all motorisation*	11.10 -			AM65-20-022-01-22	A, 175											

BMW

Modell	Baujahr	Achslast Vorne kg	Achslast Hinten kg	Artikel-Nr.	Hinweise	ab Nachtrag ...xx BE	bis Nachtrag ...xx BE	ca. Tieferl. Vorne mm	ca. Tieferl. Hinten mm	Ø Vorne mm	Ø Hinten mm	Verstellbarkeit Vorne	Verstellbarkeit Hinten	Ersatzteilbez. Vorne	Ersatzteilbez. Hinten	Gutachten
Model	*Year*	*Front Axle Load kg*	*Rear Axle Load kg*	*Part-No.*	*Notes*	*from suppl. ...xx of type approval*	*to suppl. ...xx of type approval*	*ca. Lowering Front mm*	*ca. Lowering Rear mm*	*Ø Front mm*	*Ø Rear mm*	*Adjustable Front*	*Adjustable Rear*	*Spare Part Marking Front*	*Spare Part Marking Rear*	*Homologation*
6 Coupe (F13)																
B12 Pro-Kit (Performance Komplettfahrwerke | *Performance Springs+Shocks*)																
640 d, 640 i	11.10 -	1140	1330	E90-20-029-03-22	A, 18, 20, 78, 161			25	20					F11-20-029-01-VA	F11-20-029-03-HA	T
6 Gran Coupe (F06)																
Pro-Kit (Performance Fahrwerksfedern | *Performance Springs*)																
640 d, 640 i	11.10 -	1140	1350	E10-20-029-01-22	A, 18, 20			25	20					F11-20-029-01-VA	F11-20-029-01-HA	T
M	12.12 -	1180	1260	E10-20-029-07-22	A, 18, 20			20	20					F11-20-029-07-VA	F11-20-029-07-HA	T
650 i, 650 i xDrive	11.11 -	1260	1350	E10-20-029-02-22	A, 18			25	20					F11-20-029-02-VA	F11-20-029-01-HA	T
Pro-Tronic (Elektronische Performance Fahrwerksmodule | *Electronic Performance Suspension Moduls*)																
Alle Motorisierungen / *all motorisation*	09.11 -			AM65-20-022-01-22	A, 175											
B12 Pro-Kit (Performance Komplettfahrwerke | *Performance Springs+Shocks*)																
640 d, 640 i	09.11 -	1140	1350	E90-20-029-10-22	A, 18, 20, 78, 161			25	20					F11-20-029-01-VA	F11-20-029-01-HA	T
M	09.11 -	1180	1260	E90-20-029-07-22	A, 18, 78, 161			20	20					F11-20-029-07-VA	F11-20-029-07-HA	T
650 i	09.11 -	1260	1350	E90-20-029-11-22	A, 18, 78, 161			25	20					F11-20-029-02-VA	F11-20-029-01-HA	T
7 (E32)																
Pro-Kit (Performance Fahrwerksfedern | *Performance Springs*)																
730 i,iL, 730 i,iL V8, 735 i,iL	09.86 - 09.94	1110	1280	E2016-140	A, 18, 20			25-35	25-30					F2016001	F2009002	T
740 i,iL V8	04.92 - 09.94	1110	1280	E2037-140	A, 18, 20			30	25					F2016001	F2009002	T
B12 Pro-Kit (Performance Komplettfahrwerke | *Performance Springs+Shocks*)																
730 i,iL, 735 i,iL	03.88 - 07.90	1110	1280	E90-20-026-01-22	A, 18, 20, 78, 121, 161			25-35	25-30					F2016001	F2009002	T
730 i,iL, 730 i,iL V8, 735 i,iL	08.90 - 09.94	1110	1280	E90-20-026-02-22	A, 18, 20, 78, 101, 161			25-35	25-30					F2016001	F2009002	T
740 i,iL V8	08.90 - 09.94	1110	1280	E90-20-026-03-22	A, 18, 20, 78, 101, 161			30	25					F2048001	F2048002	T
7 (E38)																
Pro-Kit (Performance Fahrwerksfedern | *Performance Springs*)																
730 i,iL, 735 i,iL, 740 i,iL, 750 i,iL	10.94 - 11.01	1230	1370	E2048-140	A, 18, 20, 68			30	30					F2048001	F2048002	T
730 i,iL, 735 i,iL, 740 i,iL, 750 i,iL	10.94 - 11.01	1230	1370	E2049-140	A, 20, 68			30	30					F2048001	F2049002	T
B12 Pro-Kit (Performance Komplettfahrwerke | *Performance Springs+Shocks*)																
730 i,iL, 740 i,iL, 750 i,iL	10.94 - 11.01	1230	1370	E90-20-027-01-22	A, 18, 20, 68, 78, 130, 161			30	25							T
7 (E65, E66)																
Pro-Kit (Performance Fahrwerksfedern | *Performance Springs*)																
730 d, 735 i, 735 i,Li, 740 i,Li, 745 i,Li, 750 i,Li	11.01 -	1215	1400	E10-20-006-01-22	A, 18, 20			25	25					F11-20-006-01-VA	F11-20-006-01-HA	T
730 d, 735 i, 735 i,Li, 740 i,Li, 745 i,Li, 750 i,Li	11.01 -	1215	1400	E10-20-006-05-20	A, 20			25	25					F11-20-006-01-VA	Luftfederverstellung *air suspension*	T
740 d, 745 d	10.02 -	1295	1400	E10-20-006-03-22	A, 18, 20			25	25					F11-20-006-03-VA	F11-20-006-01-HA	T
740 d, 745 d, 760 i,Li	10.02 -	1295	1400	E10-20-006-04-20	A, 20			25	25					F11-20-006-03-VA	Luftfederverstellung *air suspension*	T
7 (F01, F02, F03, F04)																
Pro-Kit (Performance Fahrwerksfedern | *Performance Springs*)																
730 d, 730 d xDrive, 730 i, 740 d, 740 d xDrive, 740 i, 740 i xDrive	06.08 -	1235	1500	E10-20-018-03-20	A			25	20					F11-20-018-01-VA	Luftfederverstellung *air suspension*	T
730 d, 730 d xDrive, 730 i, 740 d, 740 d xDrive, 740 i, 740 i xDrive	06.08 -	1235	1500	E10-20-018-01-22	A, 18			25	20					F11-20-018-01-VA	F11-20-018-01-HA	T
750 d xDrive, 750 i, 750 i xDrive	10.08 -	1340	1500	E10-20-018-04-20	A			25	20					F11-20-018-02-VA	Luftfederverstellung *air suspension*	T
750 i	10.08 -	1340	1500	E10-20-018-02-22	A, 18			25	20					F11-20-018-02-VA	F11-20-018-01-HA	T
Pro-Tronic (Elektronische Performance Fahrwerksmodule | *Electronic Performance Suspension Moduls*)																
Alle Motorisierungen / *all motorisation*	06.08 -			AM65-20-022-01-22	A, 175											
8 (E31)																
Pro-Kit (Performance Fahrwerksfedern | *Performance Springs*)																
840 Ci, 840 i, 850 CSi, 850 Ci, 850 i,Ci	04.90 - 12.99	1150	1200	E2022-140	A, 18, 20			25	15-20					F2022001	F2022002	T
B12 Pro-Kit (Performance Komplettfahrwerke | *Performance Springs+Shocks*)																
840 Ci, 840 i, 850 CSi, 850 Ci	02.93 - 12.99	1150	1200	E90-20-028-01-22	A, 18, 20, 21, 68, 78, 161			25	15-20					F2022001	F2022002	T
850 i,Ci	04.90 - 10.94	1150	1200	E90-20-028-01-22	A, 18, 20, 21, 68, 78, 156, 161			25	15-20					F2022001	F2022002	T
X1 (E84)																
Pro-Kit (Performance Fahrwerksfedern | *Performance Springs*)																
sDrive 16 i, sDrive 18 i, sDrive 20 i, sDrive 16 d, sDrive 18 d, sDrive 20 d, sDrive 28 i	03.09 -	940	1220	E10-20-020-01-22	A, 18, 20			25	25					F11-20-020-01-VA	F11-20-020-01-HA	T
xDrive 20 i, xDrive 25 i, xDrive 28 i, xDrive 35 i, xDrive 18 d, xDrive 20 d, xDrive 23 d, xDrive 25 d	03.09 -	1030	1220	E10-20-020-02-22	A, 18			25	25					F11-20-020-02-VA	F11-20-020-01-HA	T
Pro-Lift-Kit (Performance Höherlegung | *Performance Lift Springs*)																
sDrive 16 i, sDrive 18 i, sDrive 20 i, sDrive 16 d, sDrive 18 d, sDrive 20 d, sDrive 28 i	03.09 -	940	1220	E30-20-020-01-22	A, 18, 20			+25-30	+30					F31-20-020-01-FA	F31-20-020-01-RA	T
xDrive 20 i, xDrive 25 i, xDrive 28 i, xDrive 35 i, xDrive 18 d, xDrive 20 d, xDrive 23 d, xDrive 25 d	03.09 -	1030	1220	E30-20-020-02-22	A, 18			+25-30	+30					F31-20-020-02-FA	F31-20-020-01-RA	T
B12 Pro-Kit (Performance Komplettfahrwerke | *Performance Springs+Shocks*)																
sDrive 16 i, sDrive 18 i, sDrive 20 i, sDrive 16 d, sDrive 18 d, sDrive 20 d, sDrive 28 i	03.09 -	940	1180	E90-20-020-01-22	A, 18, 20, 78, 161			25	25					F11-20-020-01-VA	F11-20-020-01-HA	T
xDrive 20 i, xDrive 25 i, xDrive 28 i, xDrive 35 i, xDrive 18 d, xDrive 20 d, xDrive 23 d, xDrive 25 d	03.09 -	1030	1180	E90-20-020-04-22	A, 18, 78, 161			25	25					F11-20-020-02-VA	F11-20-020-01-HA	T

BMW

Modell *Model*	Baujahr *Year*	Achslast Vorne kg *Front Axle Load kg*	Achslast Hinten kg *Rear Axle Load kg*	Artikel-Nr. *Part-No.*	Hinweise *Notes*	ab Nachtrag ...xx BE *from suppl. ...xx of type approval*	bis Nachtrag ...xx BE *to suppl. ...xx of type approval*	ca. Tieferl. Vorne mm *ca. Lowering Front mm*	ca. Tieferl. Hinten mm *ca. Lowering Rear mm*	Ø Vorne mm *Ø Front mm*	Ø Hinten mm *Ø Rear mm*	Verstellbarkeit Vorne *Adjustable Front*	Verstellbarkeit Hinten *Adjustable Rear*	Ersatzteilbez. Vorne *Spare Part Marking Front*	Ersatzteilbez. Hinten *Spare Part Marking Rear*	Gutachten *Homologation*
X3 (E83)																
Pro-Kit (Performance Fahrwerksfedern | *Performance Springs*)																
2.5 i, 2.5 si, 3.0 i xDrive, 3.0 si, 2.0 d, 3.0 d, 3.0 sd, 2.5 si xDrive, xDrive 25 i, xDrive 28 i, xDrive 30 i, xDrive 20 d, xDrive 30 d, xDrive 35 d	01.04 -	1177	1285	E10-20-009-04-22	A, 18			30-40	30					F11-20-009-04-VA	F11-20-009-04-HA	T
Anti-Roll-Kit (Performance Stabilisatoren | *Performance Sway Bars*)																
2.0 i, 2.5 i, 2.5 si, 3.0 i xDrive, 3.0 si, 2.0 d, 3.0 d, 3.0 sd, 2.5 si xDrive, xDrive 20 i, xDrive 25 i, xDrive 28 i, xDrive 30 i, xDrive 18 d, xDrive 20 d, xDrive 30 d, xDrive 35 d	01.04 -			E40-20-009-04-11	A, 18, 22, 45					27	23	nicht verstellbar *not adjustable*	nicht verstellbar *not adjustable*	AS41-20-009-04-VA	AS41-20-009-04-HA	T
B12 Pro-Kit (Performance Komplettfahrwerke | *Performance Springs+Shocks*)																
2.5 i, 2.5 si, 3.0 i xDrive, 3.0 si, 2.0 d, 3.0 d, 3.0 sd, 2.5 si xDrive, xDrive 25 i, xDrive 28 i, xDrive 30 i, xDrive 20 d, xDrive 30 d, xDrive 35 d	01.04 -	1177	1285	E90-20-009-04-22	A, 18, 76, 78, 161			30-40	30					F11-20-009-04-VA	F11-20-009-04-HA	T
X3 (F25)																
Pro-Kit (Performance Fahrwerksfedern | *Performance Springs*)																
xDrive 20 d, xDrive 20 i, xDrive 28 i, xDrive 35i	09.10 -	1120	1330	E10-20-024-01-22	A, 18			30	30					F11-20-024-01-VA	F11-20-024-01-HA	T
xDrive 30 d, xDrive 35 d, xDrive 35 i	09.10 -	1180	1330	E10-20-024-02-22	A, 18			30	30					F11-20-024-02-VA	F11-20-024-01-HA	T
Pro-Lift-Kit (Performance Höherlegung | *Performance Lift Springs*)																
xDrive 20 d, xDrive 20 i, xDrive 28 i, xDrive 35i	09.10 -	1120	1330	E30-20-024-01-22	A, 18			+30	+30					F31-20-024-01-FA	F31-20-024-01-RA	T
xDrive 35i, xDrive 30d, xDrive 35d	09.10 -	1180	1330	E30-20-024-02-22	A, 18			+30	+30					F31-20-024-02-FA	F31-20-024-01-RA	T
Pro-Tronic (Elektronische Performance Fahrwerksmodule | *Electronic Performance Suspension Moduls*)																
Alle Motorisierungen / *all motorisation*	09.10 -			AM65-20-030-01-22	A, 175											
B12 Pro-Kit (Performance Komplettfahrwerke | *Performance Springs+Shocks*)																
xDrive 20 d, xDrive 20 i, xDrive 28 i, xDrive 35i	09.10 -	1120	1330	E90-20-024-01-22	A, 18, 78, 161			30	30					F11-20-024-01-VA	F11-20-024-01-HA	T
xDrive 30 d, xDrive 35 d, xDrive 35 i	09.10 -	1180	1330	E90-20-024-02-22	A, 18, 78, 161			30	30					F11-20-024-02-VA	F11-20-024-01-HA	T
X4 (F26)																
Pro-Kit (Performance Fahrwerksfedern | *Performance Springs*)																
xDrive 20 i, xDrive 28 i, xDrive 20 d	04.14 -	1120	1330	E10-20-024-01-22	A, 18			20	20					F11-20-024-01-VA	F11-20-024-01-HA	T
xDrive 35 i, xDrive 30 d, xDrive 35 d, M40 i	04.14 -	1180	1330	E10-20-024-02-22	A, 18			20	20					F11-20-024-02-VA	F11-20-024-01-HA	T
Pro-Lift-Kit (Performance Höherlegung | *Performance Lift Springs*)																
xDrive 20 i, xDrive 28 i, xDrive 20 d	04.14 -	1120	1330	E30-20-024-01-22	A, 18			+30	+30					F31-20-024-01-FA	F31-20-024-01-RA	T
xDrive 35 i, xDrive 30 d, xDrive 35 d, M40 i	04.14 -	1180	1330	E30-20-024-02-22	A, 18			+30	+30					F31-20-024-02-FA	F31-20-024-01-RA	T
B12 Pro-Kit (Performance Komplettfahrwerke | *Performance Springs+Shocks*)																
xDrive 20 i, xDrive 28 i, xDrive 20 d	04.14 -	1120	1330	E90-20-024-01-22	A, 18, 78, 161			30	30					F11-20-024-01-VA	F11-20-024-01-HA	T
xDrive 35 i, xDrive 30 d, xDrive 35 d, M40 i	04.14 -	1180	1330	E90-20-024-02-22	A, 18, 78, 161			30	30					F11-20-024-02-VA	F11-20-024-01-HA	T
X5 (E53)																
Pro-Kit (Performance Fahrwerksfedern | *Performance Springs*)																
3.0 i	05.00 -	1230	1630	E10-20-009-06-20	A			30	30					F11-20-009-01-VA	Luftfederverstellung *air suspension*	T
3.0 i	05.00 -	1230	1630	E10-20-009-01-22	A, 18			30	30					F11-20-009-01-VA	F11-20-009-01-HA	T
3.0 d	05.01 -	1250	1630	E10-20-009-02-22	A, 18			30	30					F11-20-009-02-VA	F11-20-009-01-HA	T
3.0 d, 4.4 i, 4.6 is	05.00 -	1250	1630	E10-20-009-03-20	A			30	30					F11-20-009-02-VA	Luftfederverstellung *air suspension*	T
Anti-Roll-Kit (Performance Stabilisatoren | *Performance Sway Bars*)																
3.0 d, 3.0 i, 4.4 i, 4.6 is	05.00 -			E40-20-009-01-11	A, 18, 22, 45					34	26	nicht verstellbar *not adjustable*	nicht verstellbar *not adjustable*	AS41-20-009-01-VA	AS41-20-009-01-HA	T
B12 Pro-Kit (Performance Komplettfahrwerke | *Performance Springs+Shocks*)																
3.0 i	05.00 -	1230	1630	E90-20-009-01-22	A, 18, 76, 78, 161			30	30					F11-20-009-01-VA	F11-20-009-01-HA	T
3.0 d	05.01 -	1250	1630	E90-20-009-02-22	A, 18, 76, 78, 161			30	30					F11-20-009-02-VA	F11-20-009-01-HA	T
X5 (E70)																
Pro-Kit (Performance Fahrwerksfedern | *Performance Springs*)																
M	09.09 -	1400	1755	E10-20-015-03-20	A			20	15-20					F11-20-017-03-VA	Luftfederverstellung *air suspension*	T
3.0 d, 3.0 sd, 3.0 si, 4.8 i, M 50 d, xDrive 30 d, xDrive 30 i, xDrive 30 d, xDrive 35 d, xDrive 35 i, xDrive 40 d, xDrive 48 i, xDrive 50 i	02.07 -	1400	1755	E10-20-015-02-20	A			30-40	15-20					F11-20-015-01-VA	Luftfederverstellung *air suspension*	T
3.0 d, 3.0 sd, 3.0 si, xDrive 30 d, xDrive 30 i, xDrive 30 d, xDrive 35 d, xDrive 35 i, xDrive 40 d	02.07 -	1400	1755	E10-20-015-01-22	A, 18			30-40	25					F11-20-015-01-VA	F11-20-015-01-HA	T
B12 Pro-Kit (Performance Komplettfahrwerke | *Performance Springs+Shocks*)																
3.0 si, xDrive30i, xDrive35i, 3.0 d, 3.0 sd, xDrive30d, xDrive35d, xDrive40d	02.07 -	1400	1755	E90-20-015-01-22	A, 18, 78, 81, 161			30-40	25					F11-20-015-01-VA	F11-20-015-01-HA	T
X5 (F15, F85)																
Pro-Kit (Performance Fahrwerksfedern | *Performance Springs*)																
xDrive 35 i, xDrive 25 d, xDrive 30 d, xDrive 40 d	05.13 -	1375	1755	E10-20-032-01-22	A, 18, 179			20-25	15					F11-20-032-01-VA	F11-20-032-01-HA	T
xDrive 50 i, M 50 d	05.13 -	1420	1755	E10-20-032-02-22	A, 18, 179			20-25	15					F11-20-032-02-VA	F11-20-032-01-HA	T
M	05.13 -	1420	1755	E10-20-032-02-22	A, 18, 179			10	10					F11-20-032-02-VA	F11-20-032-01-HA	T
xDrive 35 i, xDrive 25 d, xDrive 30 d, xDrive 40 d	05.13 -	1375	1755	E10-20-032-03-20	A, 179			20-25	15					F11-20-032-01-VA	Luftfederverstellung *air suspension*	T
xDrive 50 i, M 50 d	05.13 -	1420	1755	E10-20-032-04-20	A, 179			20-25	15					F11-20-032-02-VA	Luftfederverstellung *air suspension*	T
M	05.13 -	1420	1755	E10-20-032-04-20	A, 179			10	10					F11-20-032-02-VA	Luftfederverstellung *air suspension*	T

BMW

Modell *Model*	Baujahr *Year*	Achslast Vorne kg *Front Axle Load kg*	Achslast Hinten kg *Rear Axle Load kg*	Artikel-Nr. *Part-No.*	Hinweise *Notes*	ab Nachtrag ...xx BE *from suppl. ...xx of type approval*	bis Nachtrag ...xx BE *to suppl. ...xx of type approval*	ca. Tieferl. Vorne mm *ca. Lowering Front mm*	ca. Tieferl. Hinten mm *ca. Lowering Rear mm*	Ø Vorne mm *Ø Front mm*	Ø Hinten mm *Ø Rear mm*	Verstellbarkeit Vorne *Adjustable Front*	Verstellbarkeit Hinten *Adjustable Rear*	Ersatzteilbez. Vorne *Spare Part Marking Front*	Ersatzteilbez. Hinten *Spare Part Marking Rear*	Gutachten *Homologation*
X6 (E71, E72)																
Pro-Kit (Performance Fahrwerksfedern | *Performance Springs*)																
30 d, 35 d, 35 i, 50 i, M 50 d, xDrive 30 d, xDrive 35 d, xDrive 35 i, xDrive 40 d, xDrive 50 i, xDrive M 50 d	05.08 -	1365	1520	E10-20-017-02-20	A			20	15-20					F11-20-017-01-VA	Luftfederverstellung *air suspension*	T
30 d, 35 d, 35 i, 50 i, M 50 d, xDrive 30 d, xDrive 35 d, xDrive 35 i, xDrive 40 d, xDrive 50 i	05.08 -	1365	1520	E10-20-017-01-22	A, 18			20	20					F11-20-017-01-VA	F11-20-017-01-HA	T
50 i, M, xDrive 50 i	05.08 -	1400	1520	E10-20-017-04-20	A			20	15-20					F11-20-017-03-VA	Luftfederverstellung *air suspension*	T
50 i, xDrive 50 i	05.08 -	1400	1520	E10-20-017-03-22	A, 18			20	20					F11-20-017-03-VA	F11-20-017-01-HA	T
B12 Pro-Kit (Performance Komplettfahrwerke | *Performance Springs+Shocks*)																
35i, xDrive35i, 30d, xDrive30d, 35d, xDrive35d, xDrive40d	05.08 -	1365	1520	E90-20-017-01-22	A, 18, 78, 81, 161			20	20					F11-20-017-01-VA	F11-20-017-01-HA	T
X6 (F16, F86)																
Pro-Kit (Performance Fahrwerksfedern | *Performance Springs*)																
xDrive 35 i, xDrive 25 d, xDrive 30 d, xDrive 40 d	08.14 -	1375	1755	E10-20-032-01-22	A, 18, 179			20	20					F11-20-032-01-VA	F11-20-032-01-HA	T
xDrive 50 i, M 50 d	08.14 -	1420	1755	E10-20-032-02-22	A, 18, 179			20	20					F11-20-032-02-VA	F11-20-032-01-HA	T
M	08.14 -	1420	1755	E10-20-032-02-22	A, 18, 179			10	10					F11-20-032-02-VA	F11-20-032-01-HA	T
xDrive 35 i, xDrive 25 d, xDrive 30 d, xDrive 40 d	08.14 -	1375	1755	E10-20-032-03-20	A, 179			20	20					F11-20-032-01-VA	Luftfederverstellung *air suspension*	T
xDrive 50 i, M 50 d	08.14 -	1420	1755	E10-20-032-04-20	A, 179			20	20					F11-20-032-02-VA	Luftfederverstellung *air suspension*	T
M	08.14 -	1420	1755	E10-20-032-04-20	A, 179			10	10					F11-20-032-02-VA	Luftfederverstellung *air suspension*	T
Z3 (E36)																
Pro-Kit (Performance Fahrwerksfedern | *Performance Springs*)																
1.8, 1.9	10.95 - 01.03	755	870	E2060-140	A, 18, 20			30	30					F2021101	F2003102	T
2.0, 2.2, 2.8, 3.0	04.97 - 01.03	830	870	E2062-140	A, 18, 20			30	30					F2062001	F2003102	T
B12 Pro-Kit (Performance Komplettfahrwerke | *Performance Springs+Shocks*)																
1.8, 1.9	10.95 - 01.03	755	870	E90-20-002-01-22	A, 18, 20, 78, 161			30	30					F2021101	F2003102	T
2.0, 2.2, 2.8, 3.0	04.97 - 01.03	830	870	E90-20-002-02-22	A, 18, 20, 78, 161			30	30					F2062001	F2003102	T
Z3 Coupe (E36)																
Pro-Kit (Performance Fahrwerksfedern | *Performance Springs*)																
2.8, 3.0	04.97 - 06.03	830	870	E2068-140	A, 18, 20			30	30					F2062001	F2003102	T
B12 Pro-Kit (Performance Komplettfahrwerke | *Performance Springs+Shocks*)																
2.8, 3.0	04.97 - 06.03	830	870	E90-20-002-03-22	A, 18, 20, 78, 161			30	30					F2062001	F2003102	T
Z4 (E85)																
Pro-Kit (Performance Fahrwerksfedern | *Performance Springs*)																
2.2 i, 2.5 i, 2.5 si, 3.0 i, 3.0 si	02.03 -	790	860	E10-20-010-01-22	A, 18, 20			30	30					F11-20-010-01-VA	F11-20-010-01-HA	T
M	03.06 -	855	935	E10-20-010-04-22	A, 18, 20			20	10					F11-20-010-04-VA	F11-20-010-04-HA	T
B12 Pro-Kit (Performance Komplettfahrwerke | *Performance Springs+Shocks*)																
2.2 i, 2.5 i, 2.5 si, 3.0 i, 3.0 si	02.03 -	790	860	E90-20-010-01-22	A, 18, 20, 78, 161			30	30					F11-20-010-01-VA	F11-20-010-01-HA	T
M	03.06 -	855	935	E90-20-010-03-22	A, 18, 20, 78, 161			20	10					F11-20-010-04-VA	F11-20-010-04-HA	T
Z4 (E89)																
Pro-Kit (Performance Fahrwerksfedern | *Performance Springs*)																
sDrive 18 i, sDrive 20 i, sDrive 23 i, sDrive 28 i, sDrive 30 i	05.09 -	800	975	E10-20-019-01-22	A, 18, 20			25	15					F11-20-019-01-VA	F11-20-019-01-HA	T
sDrive 35 i, sDrive 35 is	05.09 -	870	1000	E10-20-019-02-22	A, 18, 20			20	10					F11-20-013-01-VA	F11-20-001-02-HA	T
Anti-Roll-Kit (Performance Stabilisatoren | *Performance Sway Bars*)																
sDrive 18 i, sDrive 20 i, sDrive 23 i, sDrive 28 i, sDrive 30 i, sDrive 35 i, sDrive 35 is	05.09 -			E40-20-019-01-11	A, 18, 20, 22, 45					28	21	nicht verstellbar *not adjustable*	nicht verstellbar *not adjustable*	AS41-20-019-01-VA	AS41-20-019-01-HA	T
Pro-Tronic (Elektronische Performance Fahrwerksmodule | *Electronic Performance Suspension Moduls*)																
Alle Motorisierungen / *all motorisation*	05.09 -			AM65-20-019-01-22	A, 175											
B12 Pro-Kit (Performance Komplettfahrwerke | *Performance Springs+Shocks*)																
sDrive 20 i, sDrive 23 i, sDrive 28 i, sDrive 30 i	05.09 -	800	975	E90-20-019-01-22	A, 18, 20, 21, 78, 161			25	15					F11-20-019-01-VA	F11-20-019-01-HA	T
sDrive 35 i, sDrive 35 is	05.09 -	870	1000	E90-20-019-02-22	A, 18, 20, 21, 78, 161			20	20					F11-20-013-01-VA	F11-20-001-02-HA	T
Pro-Street-S (Gewindefahrwerke - höhenverstellbar | *Coil-Overs-Adjustable Ride Hight*)																
sDrive 18 i, sDrive 20 i, sDrive 23 i, sDrive 28 i, sDrive 30 i, sDrive 35 i, sDrive 35 is	05.09 -	870	1000	PSS65-20-019-01-22	A, 20, 21, 24, 25, 45, 160			15-40	10-35							T
Z4 Coupe (E86)																
Pro-Kit (Performance Fahrwerksfedern | *Performance Springs*)																
3.0 si	03.06 -	790	890	E10-20-010-05-22	A, 18, 20			30	20					F11-20-010-01-VA	F11-20-010-04-HA	T
M	03.06 -	855	935	E10-20-010-04-22	A, 18, 20			20	10					F11-20-010-04-VA	F11-20-010-04-HA	T
B12 Pro-Kit (Performance Komplettfahrwerke | *Performance Springs+Shocks*)																
3.0 si	03.06 -	790	890	E90-20-010-02-22	A, 18, 20, 78, 161			30	20					F11-20-010-01-VA	F11-20-010-04-HA	T
M	03.06 -	855	935	E90-20-010-03-22	A, 18, 20, 78, 161			20	10					F11-20-010-04-VA	F11-20-010-04-HA	T

CHEVROLET

Modell	Baujahr	Achslast Vorne kg	Achslast Hinten kg	Artikel-Nr.	Hinweise	ab Nachtrag ...xx BE	bis Nachtrag ...xx BE	ca. Tieferl. Vorne mm	ca. Tieferl. Hinten mm	Ø Vorne mm	Ø Hinten mm	Verstellbarkeit Vorne	Verstellbarkeit Hinten	Ersatzteilbez. Vorne	Ersatzteilbez. Hinten	Gutachten
Model	*Year*	*Front Axle Load kg*	*Rear Axle Load kg*	*Part-No.*	*Notes*	*from suppl. ...xx of type approval*	*to suppl. ...xx of type approval*	*ca. Lowering Front mm*	*ca. Lowering Rear mm*	*Ø Front mm*	*Ø Rear mm*	*Adjustable Front*	*Adjustable Rear*	*Spare Part Marking Front*	*Spare Part Marking Rear*	*Homologation*
CRUZE (J300)																
Pro-Kit (Performance Fahrwerksfedern | *Performance Springs*)																
1.6, 1.8	05.09 -	1220	1000	E10-23-009-01-22	A, 18, 20			30	30					F11-65-019-04-VA	F6549002	T
B12 Pro-Kit (Performance Komplettfahrwerke | *Performance Springs+Shocks*)																
1.6, 1.8	05.09 -	1220	1000	E90-23-009-01-22	A, 18, 20, 78, 161			30	30					F11-65-019-04-VA	F6549002	T
Pro-Street-S (Gewindefahrwerke - höhenverstellbar | *Coil-Overs-Adjustable Ride Hight*)																
1.6, 1.7 D, 1.8, 2.0 CDI	05.09 -	1220	1000	PSS65-65-020-01-22	A, 18, 20, 24, 25, 45, 160			40-70	45-75							T
CRUZE Schrägheck (J305)																
CRUZE Hatchback (J305)																
Pro-Kit (Performance Fahrwerksfedern | *Performance Springs*)																
1.4, 1.6, 1.8	06.11 -	1220	1000	E10-23-009-01-22	A, 18, 20			30	30					F11-65-019-04-VA	F6549002	T
B12 Pro-Kit (Performance Komplettfahrwerke | *Performance Springs+Shocks*)																
1.6, 1.8	05.09 -	1220	1000	E90-23-009-01-22	A, 18, 20, 78, 161			30	30					F11-65-019-04-VA	F6549002	T
Pro-Street-S (Gewindefahrwerke - höhenverstellbar | *Coil-Overs-Adjustable Ride Hight*)																
1.4, 1.6, 1.6 T, 1.7 D, 1.8, 2.0 CDI	06.11 -	1220	1000	PSS65-65-020-01-22	A, 18, 20, 24, 25, 45, 160			40-70	45-75							T
CRUZE Kombi (J308)																
CRUZE Station Wagon (J308)																
Pro-Kit (Performance Fahrwerksfedern | *Performance Springs*)																
1.4, 1.6, 1.6 T, 1.7 TD, 1.8, 2.0 TD	08.12 -	1220	1000	E10-23-009-03-22	A, 18, 20			30	30					F11-65-019-04-VA	F11-23-007-01-HA	T
B12 Pro-Kit (Performance Komplettfahrwerke | *Performance Springs+Shocks*)																
1.4, 1.6, 1.6T, 1.8, 1.7 TD, 2.0 TD	08.12 -	1220	1000	E90-23-009-03-22	A, 18, 20, 78, 161			30	30					F11-65-019-04-VA	F11-23-007-01-HA	T
Espero (KLEJ)																
Pro-Kit (Performance Fahrwerksfedern | *Performance Springs*)																
1.5, 1.5 16V, 1.8, 2.0	10.91 - 09.99	860	890	E2302-140	A, 18, 20			30	30					F6518001	F6522102	T
B12 Pro-Kit (Performance Komplettfahrwerke | *Performance Springs+Shocks*)																
1.5, 1.5 16V, 1.8, 2.0	10.93 - 09.99	860	890	E90-23-010-01-22	A, 18, 20, 78, 161			30	30					F6518001	F6522102	T
Nexia (KLETN)																
Pro-Kit (Performance Fahrwerksfedern | *Performance Springs*)																
1.5, 1.5 16V	02.95 - 08.97	760	830	E2301-240	A, 18, 20			30	30					F6518001	F7804002	T
1.5 16V, 1.8	02.95 - 08.97	830	830	E2301-140	A, 18, 20			30	30					F6517001	F7804002	T
B12 Pro-Kit (Performance Komplettfahrwerke | *Performance Springs+Shocks*)																
1.5, 1.5 16V	02.95 - 08.97	760	830	E90-23-011-01-22	A, 18, 20, 78, 161			30	30					F6518001	F7804002	T
1.5 16V, 1.8	02.95 - 08.97	830	830	E90-23-011-02-22	A, 18, 20, 78, 161			30	30							T
Nexia Stufenheck (KLETN)																
Nexia Saloon (KLETN)																
Pro-Kit (Performance Fahrwerksfedern | *Performance Springs*)																
1.5, 1.5 16V	02.95 - 03.01	760	830	E2301-240	A, 18, 20			30	30					F6518001	F7804002	T
1.5 16V, 1.8	02.95 - 03.01	830	830	E2301-140	A, 18, 20			30	30					F6517001	F7804002	T
B12 Pro-Kit (Performance Komplettfahrwerke | *Performance Springs+Shocks*)																
1.5, 1.5 16V	02.95 - 03.01	760	830	E90-23-011-01-22	A, 18, 20, 78, 161			30	30					F6518001	F7804002	T
1.5 16V, 1.8	02.95 - 03.01	830	830	E90-23-011-02-22	A, 18, 20, 78, 161			30	30					F6517001	F7804002	T
NUBIRA Stufenheck																
NUBIRA Saloon																
Pro-Kit (Performance Fahrwerksfedern | *Performance Springs*)																
1.6, 1.8	03.05 -	920	845	E10-23-002-01-22	A, 18, 20			30	30					F11-23-016-01-FA	F11-23-016-01-RA	T
SPARK (N400)																
Pro-Kit (Performance Fahrwerksfedern | *Performance Springs*)																
1.0	01.15 -	740	710	E10-23-016-01-22	A, 18, 20			30	30					F11-23-002-01-VA	F11-23-002-01-HA	E
TRAX																
Pro-Kit (Performance Fahrwerksfedern | *Performance Springs*)																
1.4, 1.4 AWD, 1.6, 1.6 AWD, 1.8, 1.8 AWD	12.12 -	1065	995	E10-65-029-01-22	A, 18			25	25					F11-65-029-01-VA	F11-65-029-01-HA	T
1.7 TD, 1.7 TD AWD	12.12 -	1065	995	E10-65-029-02-22	A, 18			25	25					F11-65-029-02-VA	F11-65-029-01-HA	T

CHRYSLER

300 C (LX)																
Pro-Kit (Performance Fahrwerksfedern | *Performance Springs*)																
2.7, 3.0 CRD, 3.0 V6 CRD, 3.5, 5.7, 6.1 SRT8	09.04 - 11.12	1275	1275	E10-28-011-03-22	A, 18, 20, 44			35	35					F11-28-011-03-VA	F11-28-011-03-HA	T
300 C Touring (LX)																
Pro-Kit (Performance Fahrwerksfedern | *Performance Springs*)																
2.7, 3.0 CRD, 3.5, 5.7	09.04 - 12.10	1275	1275	E10-28-011-03-22	A, 18, 20, 44			35	35					F11-28-011-03-VA	F11-28-011-03-HA	T
CROSSFIRE																
Pro-Kit (Performance Fahrwerksfedern | *Performance Springs*)																
3.2	07.03 - 12.07	845	820	E10-28-009-01-22	A, 18, 20			30	30					F2552101	F2552102	T
B12 Pro-Kit (Performance Komplettfahrwerke | *Performance Springs+Shocks*)																
3.2	07.03 - 12.07	845	820	E90-28-009-01-22	A, 18, 20, 78, 161			30	30					F2552101	F2552102	T
CROSSFIRE Roadster																
Pro-Kit (Performance Fahrwerksfedern | *Performance Springs*)																
3.2	05.04 - 12.07	845	820	E10-28-009-01-22	A, 18, 20			30	30					F2552101	F2552102	T
B12 Pro-Kit (Performance Komplettfahrwerke | *Performance Springs+Shocks*)																
3.2	05.04 - 12.07	845	820	E90-28-009-01-22	A, 18, 20, 78, 161			30	30					F2552101	F2552102	T

CHRYSLER

CITROËN CHRYSLER

Modell *Model*	Baujahr *Year*	Achslast Vorne kg *Front Axle Load kg*	Achslast Hinten kg *Rear Axle Load kg*	Artikel-Nr. *Part-No.*	Hinweise *Notes*	ab Nachtrag ...xx BE *from suppl. ...xx of type approval*	bis Nachtrag ...xx BE *to suppl. ...xx of type approval*	ca. Tieferl. Vorne mm *ca. Lowering Front mm*	ca. Tieferl. Hinten mm *ca. Lowering Rear mm*	Ø Vorne mm *Ø Front mm*	Ø Hinten mm *Ø Rear mm*	Verstellbarkeit Vorne *Adjustable Front*	Verstellbarkeit Hinten *Adjustable Rear*	Ersatzteilbez. Vorne *Spare Part Marking Front*	Ersatzteilbez. Hinten *Spare Part Marking Rear*	Gutachten *Homologation*
PT CRUISER (PT_)																
Pro-Kit (Performance Fahrwerksfedern | *Performance Springs*)																
1.6, 2.0, 2.2 CRD, 2.4, GT 2.4	06.00 - 12.10	1115	980	E10-28-002-02-22	A, 18, 20			30	30					F11-28-002-02-VA	F11-28-002-02-HA	T
Pro-Street-S (Gewindefahrwerke - höhenverstellbar | *Coil-Overs-Adjustable Ride Hight*)																
1.6, 2.0, 2.2 CRD, 2.4, GT 2.4	06.00 - 12.10	1115	980	PSS65-28-002-01-22	A, 24, 25, 45, 160			40-70	40-70							T
PT CRUISER Cabriolet ***PT CRUISER Convertible***																
Pro-Kit (Performance Fahrwerksfedern | *Performance Springs*)																
2.4, 2.4 GT	03.04 - 03.08	1115	980	E10-28-002-02-22	A, 18, 20			30	30					F11-28-002-02-VA	F11-28-002-02-HA	T
Pro-Street-S (Gewindefahrwerke - höhenverstellbar | *Coil-Overs-Adjustable Ride Hight*)																
2.4, 2.4 GT	03.04 - 03.08	1115	980	PSS65-28-002-01-22	A, 24, 25, 45, 160			40-70	40-70							T
AX (ZA-_)																
Pro-Kit (Performance Fahrwerksfedern | *Performance Springs*)																
1.4 Allure, 10, 10 E, 11, 11 KAT, 14, 14 D *1.4 Allure, 10, 10 E, 11, 11 CAT, 14, 14 D*	07.86 - 12.98	605	585	E2201-120	A, 18, 20			25-30	25-30					F2201001	Drehstabverstellung *torsion bar*	T
B12 Pro-Kit (Performance Komplettfahrwerke | *Performance Springs+Shocks*)																
10, 10 E, 11, 11 KAT, 14, 14 D *10, 10 E, 11, 11 CAT, 14, 14 D*	07.86 - 12.98	605	585	E90-22-004-01-20	A, 18, 20, 78, 161			25-30	25-30					F2201001	BI-34-030592	T
BERLINGO (MF)																
Pro-Kit (Performance Fahrwerksfedern | *Performance Springs*)																
1.1 i, 1.4, 1.4 i, 1.6 16V, 1.6 HDI 110, 1.6 HDI 75, 1.6 HDI 90, 1.8 D, 1.8 i, 1.9 D, 2.0 HDI 90	03.03 -	1000	1000	E10-22-005-01-20	A, 18, 20			30	30					F7010001	Drehstabverstellung *torsion bar*	T
1.1 i, 1.4, 1.4 i, 1.6 16V, 1.8 D, 1.8 i, 1.9 D, 2.0 HDI 90	07.96 - 02.03	1000	1000	E2206-120	A, 18, 20			25	25					F7011001	Drehstabverstellung *torsion bar*	T
BERLINGO (B9)																
Pro-Kit (Performance Fahrwerksfedern | *Performance Springs*)																
1.4 Sitzplätze 5, 1.6 HDi 110 Sitzplätze 5, 1.6 HDi 115 Sitzplätze 5, 1.6 HDi 75 Sitzplätze 5, 1.6 HDi 90 Sitzplätze 5, 1.6 Sitzplätze 5, 1.6 VTi 120 Sitzplätze 5, 1.6 VTi 95 Sitzplätze 5 *1.4 Seats 5, 1.6 HDi 110 Seats 5, 1.6 HDi 115 Seats 5, 1.6 HDi 75 Seats 5, 1.6 HDi 90 Seats 5, 1.6 Seats 5, 1.6 VTi 120 Seats 5, 1.6 VTi 95 Seats 5*	04.08 -	1170	1000	E10-22-007-03-22	A, 18, 20, 66			30	10					F11-22-007-03-VA	F11-22-007-03-HA	T
BERLINGO Kasten (M_) ***BERLINGO Box (M_)***																
Pro-Kit (Performance Fahrwerksfedern | *Performance Springs*)																
1.1 i, 1.4, 1.4 i, 1.6 16V, 1.6 HDI 75, 1.6 HDI 90, 1.8 D, 1.9 D, 1.9 D 70, 2.0 HDI 90	03.03 -	1000	1000	E10-22-005-01-20	A, 18, 20			30	30					F7010001	Drehstabverstellung *torsion bar*	T
1.1 i, 1.4, 1.4 i, 1.6 16V, 1.8 D, 1.8 i, 1.9 D, 1.9 D 70, 2.0 HDI 90	07.96 - 02.03	1000	1000	E2206-120	A, 18, 20			25	25					F7011001	Drehstabverstellung *torsion bar*	T
BERLINGO Kasten (B9) ***BERLINGO Box (B9)***																
Pro-Kit (Performance Fahrwerksfedern | *Performance Springs*)																
1.6 HDi 110 Sitzplätze 5, 1.6 HDi 75 Sitzplätze 5, 1.6 HDi 90 Sitzplätze 5, 1.6 Sitzplätze 5, 1.6 VTi 95 Sitzplätze 5 *1.6 HDi 110 Seats 5, 1.6 HDi 75 Seats 5, 1.6 HDi 90 Seats 5, 1.6 Seats 5, 1.6 VTi 95 Seats 5*	04.08 -	1170	1000	E10-22-007-03-22	A, 18, 20, 66			30	10					F11-22-007-03-VA	F11-22-007-03-HA	T
1.6 Anzahl Sitzplätze 7, 1.6 HDi 110 Anzahl Sitzplätze 7 , 1.6 HDi 75 Anzahl Sitzplätze 7, 1.6 HDi 90 Anzahl Sitzplätze 7, 1.6 VTi 95 Anzahl Sitzplätze 7 *1.6 HDi 110 Number of Seats 7, 1.6 HDi 75 Number of Seats 7, 1.6 HDi 90 Number of Seats 7, 1.6 Number of Seats 7, 1.6 VTi 95 Number of Seats 7*	04.08 -	1170	1230	E10-22-007-05-22	A, 18, 20, 67			30	10					F11-22-007-03-VA	F11-22-007-05-HA	T
C1 (PM_, PN_)																
Pro-Kit (Performance Fahrwerksfedern | *Performance Springs*)																
1.0, 1.4 HDi	06.05 -	695	695	E10-22-008-01-22	A, 18, 20			30	30					F11-70-008-01-VA	F11-70-008-01-HA	T
B12 Pro-Kit (Performance Komplettfahrwerke | *Performance Springs+Shocks*)																
1.0, 1.4 HDi	06.05 -	695	695	E90-22-008-01-22	A, 18, 20, 78, 161			30	30					F11-70-008-01-VA	F11-70-008-01-HA	T
C1 II																
Pro-Kit (Performance Fahrwerksfedern | *Performance Springs*)																
1.0 VTi 68, 1.2 VTi 82	04.14 -	695	695	E10-22-008-01-22	A, 18, 20			25	35					F11-70-008-01-VA	F11-70-008-01-HA	T
C2 (JM_)																
Pro-Kit (Performance Fahrwerksfedern | *Performance Springs*)																
1.1, 1.4, 1.4 16V, 1.4 HDi, 1.6, 1.6 VTS	09.03 -	850	820	E10-22-003-01-22	A, 18, 20			30	30					F11-22-003-01-VA	F11-22-003-01-HA	T
Sportline (Performance Fahrwerksfedern Sport | *Sport Performance Springs*)																
1.1, 1.4, 1.4 16V, 1.4 HDi, 1.6, 1.6 HDi, 1.6 VTS	09.03 -	820	735	E20-22-003-01-22	A, 20			45-50	30					F21-22-003-01-VA	F21-22-003-01-HA	T
B12 Pro-Kit (Performance Komplettfahrwerke | *Performance Springs+Shocks*)																
1.1, 1.4, 1.4 16V, 1.4 HDi, 1.6, 1.6 VTS	09.03 -	850	820	E90-22-003-01-22	A, 18, 20, 78, 161			30	30					F11-22-003-01-VA	F11-22-003-01-HA	T
B12 Sportline (Performance Komplettfahrwerke Sport | *Sport Performance Springs+Shocks*)																
1.1, 1.4, 1.4 16V, 1.4 HDi, 1.6, 1.6 HDi, 1.6 VTS	09.03 -	820	735	E95-22-003-01-22	A, 20, 78, 161			45-50	30					F21-22-003-01-VA	F21-22-003-01-HA	T
C2 ENTERPRISE																
Pro-Kit (Performance Fahrwerksfedern | *Performance Springs*)																
1.4 HDi	04.09 -	850	820	E10-22-003-01-22	A, 18, 20			30	30					F11-22-003-01-VA	F11-22-003-01-HA	T
Sportline (Performance Fahrwerksfedern Sport | *Sport Performance Springs*)																
1.4 HDi	04.09 -	820	735	E20-22-003-01-22	A, 20			45-50	30					F21-22-003-01-VA	F21-22-003-01-HA	T

CITROËN

Modell	Baujahr	Achslast Vorne kg	Achslast Hinten kg	Artikel-Nr.	Hinweise	ab Nachtrag ...xx BE	bis Nachtrag ...xx BE	ca. Tieferl. Vorne mm	ca. Tieferl. Hinten mm	Ø Vorne mm	Ø Hinten mm	Verstellbarkeit Vorne	Verstellbarkeit Hinten	Ersatzteilbez. Vorne	Ersatzteilbez. Hinten	Gutachten
Model	*Year*	*Front Axle Load kg*	*Rear Axle Load kg*	*Part-No.*	*Notes*	*from suppl. ...xx of type approval*	*to suppl. ...xx of type approval*	*ca. Lowering Front mm*	*ca. Lowering Rear mm*	*Ø Front mm*	*Ø Rear mm*	*Adjustable Front*	*Adjustable Rear*	*Spare Part Marking Front*	*Spare Part Marking Rear*	*Homologation*
C3 I (FC_)																
Pro-Kit (Performance Fahrwerksfedern | *Performance Springs*)																
1.1 i, 1.4 16V, 1.4 16V HDi, 1.4 HDi, 1.4 i, 1.4 i Bivalent, 1.6 16V	02.02 -	850	820	E10-22-003-01-22	A, 18, 20			30	30					F11-22-003-01-VA	F11-22-003-01-HA	T
Sportline (Performance Fahrwerksfedern Sport | *Sport Performance Springs*)																
1.1 i, 1.4 16V, 1.4 16V HDi, 1.4 HDi, 1.4 i, 1.4 i Bivalent, 1.6 16V	02.02 -	820	735	E20-22-003-01-22	A, 20			45-50	30					F21-22-003-01-VA	F21-22-003-01-HA	T
B12 Pro-Kit (Performance Komplettfahrwerke | *Performance Springs+Shocks*)																
1.1 i, 1.4 16V, 1.4 16V HDi, 1.4 Bioflex, 1.4 HDi, 1.4 i, 1.6 16V, 1.6 Bioflex	02.02 -	850	820	E90-22-003-01-22	A, 18, 20, 78, 161			30	30					F11-22-003-01-VA	F11-22-003-01-HA	T
B12 Sportline (Performance Komplettfahrwerke Sport | *Sport Performance Springs+Shocks*)																
1.1 i, 1.4 16V, 1.4 16V HDi, 1.4 Bioflex, 1.4 HDi, 1.4 i, 1.6 16V, 1.6 Bioflex	02.02 -	820	735	E95-22-003-01-22	A, 20, 78, 161			45-50	30					F21-22-003-01-VA	F21-22-003-01-HA	T
C3 II																
Pro-Kit (Performance Fahrwerksfedern | *Performance Springs*)																
1.0 VTi 68, 1.1, 1.2 VTi 82, 1.2 VTi 110, 1.4, 1.4 VTi 95, 1.6 VTi 120, 1.4 HDi 70, 1.6 HDi, 1.6 HDi 90, 1.6 BlueHDi 75, 1.6 BlueHDi 110, 1.6 HDi 110, 1.6 HDi 115	11.09 -	920	825	E10-70-009-01-22	A, 18, 20			30	30					F11-70-009-01-VA	F11-70-009-01-HA	T
B12 Pro-Kit (Performance Komplettfahrwerke | *Performance Springs+Shocks*)																
1.0 VTi 68, 1.1, 1.2 VTi 82, 1.4, 1.4 VTi 95, 1.6 VTi 120, 1.4 HDi 70, 1.6 HDi, 1.6 HDi 90, 1.6 HDi 110, 1.6 HDi 115	11.09 -	920	825	E90-70-009-01-22	A, 18, 20, 78, 99, 161			30	30					F11-70-009-01-VA	F11-70-009-01-HA	T
1.0 VTi 68, 1.1, 1.2 VTi 82, 1.4, 1.4 VTi 95, 1.6 VTi 120, 1.4 HDi 70, 1.6 HDi, 1.6 HDi 90, 1.6 HDi 110, 1.6 HDi 115	11.09 -	920	825	E90-70-009-02-22	A, 18, 20, 50, 78, 161			30	30					F11-70-009-01-VA	F11-70-009-01-HA	T
Pro-Street-S (Gewindefahrwerke - höhenverstellbar | *Coil-Overs-Adjustable Ride Hight*)																
1.0 VTi 68, 1.1, 1.2 VTi 82, 1.4, 1.4 VTi 95, 1.6 VTi 120, 1.4 HDi 70, 1.6 HDi, 1.6 HDi 90, 1.6 HDi 110, 1.6 HDi 115	11.09 -	920	790	PSS65-70-009-01-22	A, 24, 25, 45, 99, 160			35-60	50-75							T
C3 Picasso																
Pro-Kit (Performance Fahrwerksfedern | *Performance Springs*)																
1.2 THP 110, 1.4 Vti 95, 1.6 Vti 120, 1.6 HDi, 1.6 HDi 90, 1.6 BlueHDi 100, 1.6 HDI 110, 1.6 HDI 115	02.09 -	1000	900	E10-22-010-01-22	A, 18, 20			40	30					F11-22-010-01-VA	F11-22-010-01-HA	T
C3 Pluriel (HB_)																
Pro-Kit (Performance Fahrwerksfedern | *Performance Springs*)																
1.4, 1.4 HDi, 1.6	05.03 -	850	820	E10-22-003-01-22	A, 18, 20			30	30					F11-22-003-01-VA	F11-22-003-01-HA	T
Sportline (Performance Fahrwerksfedern Sport | *Sport Performance Springs*)																
1.4, 1.4 HDi, 1.6	05.03 -	820	735	E20-22-003-01-22	A, 20			45-50	30					F21-22-003-01-VA	F21-22-003-01-HA	T
C4 I (LC_)																
Pro-Kit (Performance Fahrwerksfedern | *Performance Springs*)																
1.6 16V, 1.6 16V Bio-Flex, 1.6 HDi, 1.6 THP 140, 1.6 THP 150, 1.6 VTi 120, 2.0 16V, 2.0 HDi	11.04 -	1120	920	E10-22-007-02-22	A, 18, 20			30	25					F11-70-004-01-VA	F11-70-004-01-HA	T
B12 Pro-Kit (Performance Komplettfahrwerke | *Performance Springs+Shocks*)																
1.6 16V, 1.6 16V Bio-Flex, 1.6 HDi, 1.6 THP 140, 1.6 THP 150, 1.6 VTi 120, 2.0 16V, 2.0 HDi	11.04 -	1120	920	E90-22-007-02-22	A, 18, 20, 78, 161			30	25					F11-70-004-01-VA	F11-70-004-01-HA	T
C4 II (B7)																
Pro-Kit (Performance Fahrwerksfedern | *Performance Springs*)																
1.2 THP 110, 1.2 THP 130, 1.4 VTi 95, 1.6 VTi 120, 1.6 THP 155	11.09 -	990	920	E10-22-011-01-22	A, 18, 20			30	25					F11-22-011-01-VA	F11-15-001-01-HA	T
1.6 HDi 90, 1.6 HDi 110, 1.6 HDi 115, 1.6 BlueHDi 100,1.6 BlueHDi 120, 2.0 BlueHDi 150	11.09 -	1100	920	E10-22-011-02-22	A, 18, 20			30	25					F11-70-012-01-VA	F11-15-001-01-HA	
C4 AIRCROSS																
Pro-Kit (Performance Fahrwerksfedern | *Performance Springs*)																
1.6	04.12 -	1020	1000	E10-60-016-01-22	A, 18, 20			30	25					F11-60-016-01-VA	F11-60-013-01-HA	T
1.6 HDi 115, 1.6 HDi 115 AWC, 1.8 HDi 150, 1.8 HDi 150 AWC	04.12 -	1130	1000	E10-60-016-02-22	A, 18			30	25					F11-60-013-02-VA	F11-60-013-01-HA	T
C4 CACTUS																
Pro-Kit (Performance Fahrwerksfedern | *Performance Springs*)																
1.2 VTi 75, 1.2 VTi 82, 1.2 THP 110, 1.6 HDi 90, 1.6 Blue HDi 100	09.14 -	900	790	E10-22-016-01-22	A, 18, 20			30-35	40					F11-22-003-01-VA	F11-70-010-01-HA	T
C4 Coupe (LA_)																
Pro-Kit (Performance Fahrwerksfedern | *Performance Springs*)																
1.6 16V, 1.6 HDi, 1.6 THP 150, 1.6 VTi 120, 2.0 16V, 2.0 HDi	11.04 -	1120	920	E10-22-007-02-22	A, 18, 20			30	25					F11-70-004-01-VA	F11-70-004-01-HA	T
B12 Pro-Kit (Performance Komplettfahrwerke | *Performance Springs+Shocks*)																
1.6 HDi, 1.6 THP 150, 1.6 VTi 120, 2.0 16V, 2.0 HDi	11.04 -	1120	920	E90-22-007-02-22	A, 18, 20, 78, 161			30	25					F11-70-004-01-VA	F11-70-004-01-HA	T
C4 Grand Picasso II																
Pro-Kit (Performance Fahrwerksfedern | *Performance Springs*)																
1.6 VTi 120, 1.6 THP 155, 1.6 HDi 90, 1.6 HDi 115	09.13 -	1100	970	E10-22-015-01-22	A, 18, 20, 66			30	30					F11-22-015-01-VA	F11-70-018-01-HA	T
2.0 BlueHDi 150	09.13 -	1170	970	E10-22-015-02-22	A, 18, 20, 66			30	30					F11-22-015-02-VA	F11-70-018-01-HA	T
1.6 VTi 120, 1.6 THP 155, 1.6 HDi 90, 1.6 HDi 115	09.13 -	1100	1185	E10-22-015-03-22	A, 18, 20, 67			30	30					F11-22-015-01-VA	F11-22-015-03-HA	T
2.0 BlueHDi 150	09.13 -	1170	1185	E10-22-015-04-22	A, 18, 20, 67			30	30					F11-22-015-02-VA	F11-22-015-03-HA	T
C4 Picasso I (UD_)																
Pro-Kit (Performance Fahrwerksfedern | *Performance Springs*)																
1.6 HDi, 1.8 i 16V, 2.0 i 16V	02.07 -	1170	1000	E10-22-007-03-22	A, 18, 20, 66			30	30					F11-22-007-03-VA	F11-22-007-03-HA	T
2.0 HDi 138, 2.0 HDi 150, 2.0 i 16V	02.07 -	1200	1000	E10-22-007-04-22	A, 18, 20, 66			30	30					F11-22-007-04-VA	F11-22-007-03-HA	T
C4 Picasso II																
Pro-Kit (Performance Fahrwerksfedern | *Performance Springs*)																
1.2 THP 130, 1.6 VTi 120, 1.6 THP 155, 1.6 HDi 90, 1.6 HDi 115, 1.6 BlueHDi 100, 1.6 BlueHDi 120	02.13 -	1100	970	E10-22-015-01-22	A, 18, 20, 66			30	30					F11-22-015-01-VA	F11-70-018-01-HA	T
2.0 BlueHDi 150	02.13 -	1170	970	E10-22-015-02-22	A, 18, 20, 66			30	30					F11-22-015-02-VA	F11-70-018-01-HA	T
1.2 THP 130, 1.6 VTi 120, 1.6 THP 155, 1.6 HDi 90, 1.6 HDi 115, 1.6 BlueHDi 100, 1.6 BlueHDi 120	02.13 -	1100	1185	E10-22-015-03-22	A, 18, 20, 67			30	30					F11-22-015-01-VA	F11-22-015-03-HA	T
2.0 BlueHDi 150	02.13 -	1170	1185	E10-22-015-04-22	A, 18, 20, 67			30	30					F11-22-015-02-VA	F11-22-015-03-HA	T

CITROËN

Modell	Baujahr	Achslast Vorne kg	Achslast Hinten kg	Artikel-Nr.	Hinweise	ab Nachtrag ...xx BE	bis Nachtrag ...xx BE	ca. Tieferl. Vorne mm	ca. Tieferl. Hinten mm	Ø Vorne mm	Ø Hinten mm	Verstellbarkeit Vorne	Verstellbarkeit Hinten	Ersatzteilbez. Vorne	Ersatzteilbez. Hinten	Gutachten
Model	*Year*	*Front Axle Load kg*	*Rear Axle Load kg*	*Part-No.*	*Notes*	*from suppl. ...xx of type approval*	*to suppl. ...xx of type approval*	*ca. Lowering Front mm*	*ca. Lowering Rear mm*	*Ø Front mm*	*Ø Rear mm*	*Adjustable Front*	*Adjustable Rear*	*Spare Part Marking Front*	*Spare Part Marking Rear*	*Homologation*
C4 Stufenheck																
C4 Saloon																
Pro-Kit (Performance Fahrwerksfedern | *Performance Springs*)																
1.6 16V, 1.6 HDi, 2.0 16V	07.06 -	1120	920	E10-22-007-02-22	A, 18, 20			30	25					F11-70-004-01-VA	F11-70-004-01-HA	T
B12 Pro-Kit (Performance Komplettfahrwerke | *Performance Springs+Shocks*)																
1.6 16V, 1.6 HDi, 2.0 16V	07.06 -	1120	920	E90-22-007-02-22	A, 18, 20, 78, 161			30	25					F11-70-004-01-VA	F11-70-004-01-HA	T
C8 (EA_, EB_)																
Pro-Kit (Performance Fahrwerksfedern | *Performance Springs*)																
2.0, 2.0 16V, 2.0 HDi, 2.0 HDi 135, 2.0 HDi 165, 2.2, 2.2 HDi, 3.0 V6	07.02 -	1370	1300	E10-70-005-01-22	A, 18, 20			30	10					F3015001	F3015002	T
DS3																
Pro-Kit (Performance Fahrwerksfedern | *Performance Springs*)																
1.2 Vti 82, 1.2 Vti 110, 1.4 VTi 95, 1.4 VTi 98, 1.6 VTi 120, 1.6 THP 150, 1.6 THP 155, 1.6 THP 165, 1.4 HDi 70, 1.6 HDi 90, 1.6 HDi 110, 1.6 BlueHDi 100, 1.6 BlueHDi 120, 1.6 HDi 115	11.09 -	920	825	E10-70-009-01-22	A, 18, 20, 71			20-25	10					F11-70-009-01-VA	F11-70-009-01-HA	T
B12 Pro-Kit (Performance Komplettfahrwerke | *Performance Springs+Shocks*)																
1.2 Vti 82, 1.4 VTi 95, 1.4 VTi 98, 1.6 VTi 120, 1.6 THP 150, 1.6 THP 155, 1.4 HDi 70, 1.6 HDi 90, 1.6 HDi 110, 1.6 HDi 115	11.09 -	920	825	E90-70-009-01-22	A, 18, 20, 71, 78, 99, 161			20-25	10					F11-70-009-01-VA	F11-70-009-01-HA	T
1.2 Vti 82, 1.4 VTi 95, 1.4 VTi 98, 1.6 VTi 120, 1.6 THP 150, 1.6 THP 155, 1.4 HDi 70, 1.6 HDi 90, 1.6 HDi 110, 1.6 HDi 115	11.09 -	920	825	E90-70-009-02-22	A, 18, 20, 50, 71, 78, 161			20-25	10					F11-70-009-01-VA	F11-70-009-01-HA	T
Pro-Street-S (Gewindefahrwerke - höhenverstellbar | *Coil-Overs-Adjustable Ride Hight*)																
1.2 Vti 82, 1.4 VTi 95, 1.4 VTi 98, 1.6 VTi 120, 1.6 THP 150, 1.6 THP 155, 1.4 HDi 70, 1.6 HDi 90, 1.6 HDi 110, 1.6 HDi 115, 1.6 Racing	11.09 -	920	790	PSS65-70-009-02-22	A, 24, 25, 45, 50, 160			20-45	15-40							T
DS4																
Pro-Kit (Performance Fahrwerksfedern | *Performance Springs*)																
1.6 VTi 120	04.11 -	990	920	E10-22-013-01-22	A, 18, 20			25	25					F11-22-011-01-VA	F11-70-004-05-HA	T
1.6 HDi 110, 1.6 HDi 115, 1.6 HDi 90, 1.6 THP 155, 1.6 THP 160, 1.6 THP 200, 2.0 HDi 135, 2.0 HDi 165	04.11 -	1100	920	E10-22-013-02-22	A, 18, 20			25	25					F11-70-012-01-VA	F11-70-004-05-HA	T
EVASION (22, U6)																
Pro-Kit (Performance Fahrwerksfedern | *Performance Springs*)																
1.8, 1.9 TD, 2.0, 2.0 16V, 2.0 HDI, 2.0 HDI 16V, 2.0 Turbo C.T., 2.1 TD	06.94 - 07.02	1230	1300	E2203-140	A, 18, 20			30	30					F3015001	F3015002	T
JUMPY (U6U)																
Pro-Kit (Performance Fahrwerksfedern | *Performance Springs*)																
1.6, 1.9 D, 1.9 D 70, 1.9 TD, 2.0, 2.0 HDi 110, 2.0 HDi 95, 2.0 i 16V, 2.2 HDi	10.95 -	1230	1100	E2203-140	A, 18, 20			30	30					F3015001	F3015002	T
JUMPY Kasten (BS_, BT_, BY_, BZ_)																
JUMPY Box (BS_, BT_, BY_, BZ_)																
Pro-Kit (Performance Fahrwerksfedern | *Performance Springs*)																
1.6, 1.6 i, 1.9 D, 1.9 D 70, 1.9 DT, 1.9 TD, 2.0 HDi 110, 2.0 HDi 95, 2.0 i 16V, 2.2 HDi	10.95 -	1230	1100	E2203-140	A, 18, 20			30	30					F3015001	F3015002	T
JUMPY Pritsche/Fahrgestell (BU_, BV_, BW_, BX_)																
JUMPY Platform/Chassis (BU_, BV_, BW_, BX_)																
Pro-Kit (Performance Fahrwerksfedern | *Performance Springs*)																
1.9 TD, 2.0, 2.0 HDi 110 16V, 2.0 HDi 95	10.99 -	1230	1100	E2203-140	A, 18, 20			30	30					F3015001	F3015002	T
SAXO (S0, S1)																
Pro-Kit (Performance Fahrwerksfedern | *Performance Springs*)																
1.0 X, 1.1 X,SX, 1.4 VTS, 1.5 D, 1.6, 1.6 VTL,VTR, 1.6 VTR, 1.6 VTS	02.96 - 04.04	785	700	E2204-120	A, 18, 20			30	25-30					F2204001	Drehstabverstellung *torsion bar*	T
Sportline (Performance Fahrwerksfedern Sport | *Sport Performance Springs*)																
1.0 X, 1.1 X,SX, 1.4 VTS, 1.5 D, 1.6, 1.6 VTL,VTR, 1.6 VTR, 1.6 VTS	02.96 - 04.04	785	700	E20-22-002-01-20	A, 20			45-50	30					F21-70-002-01-VA	Drehstabverstellung *torsion bar*	T
B12 Pro-Kit (Performance Komplettfahrwerke | *Performance Springs+Shocks*)																
1.0 X, 1.1 X,SX, 1.4 VTS, 1.5 D, 1.6, 1.6 VTL,VTR, 1.6 VTR, 1.6 VTS	02.96 - 04.04	785	700	E90-22-002-01-20	A, 18, 20, 78, 161			30	25-30					F2204001	BI-34-030592	T
B12 Sportline (Performance Komplettfahrwerke Sport | *Sport Performance Springs+Shocks*)																
1.0 X, 1.1 X,SX, 1.4 VTS, 1.5 D, 1.6, 1.6 VTL,VTR, 1.6 VTR, 1.6 VTS	02.96 - 04.04	785	700	E95-22-002-01-20	A, 18, 20, 78, 161			45-50	30					F21-70-002-01-VA	BI-34-030592	T
XSARA (N1)																
Pro-Kit (Performance Fahrwerksfedern | *Performance Springs*)																
1.4 HDi, 1.4 i, 1.5 D, 1.6 16V, 1.6 i, 1.8 D, 1.8 TD, 1.8 VTS, 1.8 i, 1.8 i 16V, 1.8 i Aut., 1.9 D, 1.9 SD, 1.9 TD, 2.0 16V, 2.0 HDi 109, 2.0 HDi 90	04.97 - 03.05	950	870	E2205-120	A, 18, 20			30	30					F2205001	Drehstabverstellung *torsion bar*	T
B12 Pro-Kit (Performance Komplettfahrwerke | *Performance Springs+Shocks*)																
1.4 i, 1.5 D, 1.6 16V, 1.6 i, 1.8 D, 1.8 TD, 1.8 VTS, 1.8 i, 1.8 i 16V, 1.8 i Aut., 1.9 D, 1.9 SD, 1.9 TD, 2.0 16V, 2.0 HDi 90	04.97 - 09.00	950	870	E90-22-001-01-20	A, 18, 20, 78, 161			30	30					F2205001	BI-35-050162	T
XSARA Break (N2)																
Pro-Kit (Performance Fahrwerksfedern | *Performance Springs*)																
1.4 HDi, 1.4 i, 1.5 D, 1.6 16V, 1.6 i, 1.8 D, 1.8 i, 1.8 i 16V, 1.8 i Aut., 1.9 D, 1.9 TD, 2.0 16V, 2.0 HDI 90, 2.0 HDi 109	10.97 - 08.05	950	870	E2205-120	A, 18, 20			30	30					F2205001	Drehstabverstellung *torsion bar*	T
B12 Pro-Kit (Performance Komplettfahrwerke | *Performance Springs+Shocks*)																
1.4 i, 1.5 D, 1.6 16V, 1.6 i, 1.8 D, 1.8 i, 1.8 i 16V, 1.8 i Aut., 1.9 D, 1.9 TD, 2.0 16V, 2.0 HDI 90	10.97 - 09.00	950	870	E90-22-001-01-20	A, 18, 20, 78, 161			30	30					F2205001	BI-35-050162	T
XSARA Coupe (N0)																
Pro-Kit (Performance Fahrwerksfedern | *Performance Springs*)																
1.4 HDi, 1.4 i, 1.6 16V, 1.6 i, 1.8 i, 1.8 i 16V, 1.9 D, 1.9 TD, 2.0, 2.0 16V, 2.0 HDI 90, 2.0 HDi 109, 2.0 i 16V	02.98 - 03.05	950	870	E2205-120	A, 18, 20			30	30					F2205001	Drehstabverstellung *torsion bar*	T
B12 Pro-Kit (Performance Komplettfahrwerke | *Performance Springs+Shocks*)																
1.4 i, 1.6 16V, 1.6 i, 1.8 i, 1.8 i 16V, 1.9 D, 1.9 TD, 2.0, 2.0 16V, 2.0 HDI 90, 2.0 i 16V	02.98 - 09.00	950	870	E90-22-001-01-20	A, 18, 20, 78, 161			30	30					F2205001	BI-35-050162	T

DACIA

DAIHATSU

FIAT

Modell	Baujahr	Achslast Vorne kg	Achslast Hinten kg	Artikel-Nr.	Hinweise	ab Nachtrag ...xx BE	bis Nachtrag ...xx BE	ca. Tieferl. Vorne mm	ca. Tieferl. Hinten mm	Ø Vorne mm	Ø Hinten mm	Verstellbarkeit Vorne	Verstellbarkeit Hinten	Ersatzteilbez. Vorne	Ersatzteilbez. Hinten	Gutachten
Model	*Year*	*Front Axle Load kg*	*Rear Axle Load kg*	*Part-No.*	*Notes*	*from suppl. ...xx of type approval*	*to suppl. ...xx of type approval*	*ca. Lowering Front mm*	*ca. Lowering Rear mm*	*Ø Front mm*	*Ø Rear mm*	*Adjustable Front*	*Adjustable Rear*	*Spare Part Marking Front*	*Spare Part Marking Rear*	*Homologation*
DOKKER																
Pro-Kit (Performance Fahrwerksfedern | *Performance Springs*)																
1.2 TCe, 1.5 dCi, 1.6 16V	11.12 -	965	1105	E10-26-004-01-22	A, 18, 20			25	10					F11-26-004-01-VA	F11-26-004-01-HA	T
DOKKER Express																
Pro-Kit (Performance Fahrwerksfedern | *Performance Springs*)																
1.2 TCe 115, 1.5 dCi, 1.6 16V	12.12 -	965	1105	E10-26-004-01-22	A, 18, 20			25	10					F11-26-004-01-VA	F11-26-004-01-HA	T
DUSTER																
Pro-Kit (Performance Fahrwerksfedern | *Performance Springs*)																
1.5 dCi, 1.6 16V, 1.6 16V Flexifuel	04.10 -	980	965	E10-26-003-01-22	A, 18, 20			30	30					F11-26-003-01-VA	F11-26-003-01-HA	T
1.5 dCi 4x4, 1.6 16V 4x4	06.10 -	980	1025	E10-26-003-02-22	A, 18			30	30					F11-26-003-01-VA	F11-26-003-02-HA	T
Pro-Lift-Kit (Performance Höherlegung | *Performance Lift Springs*)																
1.5 dCi 4x4, 1.6 16V 4x4	06.10 -	980	1025	E30-26-003-01-22	A, 18			+25	+25					F31-26-003-01-VA	F31-26-003-01-HA	T
B12 Pro-Kit (Performance Komplettfahrwerke | *Performance Springs+Shocks*)																
1.5 dCi, 1.6 16V, 1.6 16V Flexifuel	04.10 -	980	965	E90-26-003-01-22	A, 18, 20, 78, 161			30	30					F11-26-003-01-VA	F11-26-003-01-HA	T
1.5 dCi 4x4, 1.6 16V 4x4	04.10 -	980	1025	E90-26-003-02-22	A, 18, 78, 161			30	30					F11-26-003-01-VA	F11-26-003-02-HA	T
LODGY																
Pro-Kit (Performance Fahrwerksfedern | *Performance Springs*)																
1.2 TCe, 1.5 dCi, 1.6	06.10 -	965	1105	E10-26-004-01-22	A, 18, 20			25	10					F11-26-004-01-VA	F11-26-004-01-HA	T
LOGAN (LS_)																
Pro-Kit (Performance Fahrwerksfedern | *Performance Springs*)																
1.4, 1.5 dCi, 1.6, 1.6 16V, 1.6 16V Flexifuel, 1.6 MPI 85	09.04 -	930	880	E10-26-001-01-22	A, 18, 20			35	35					F11-26-001-01-VA	F11-26-001-01-HA	T
B12 Pro-Kit (Performance Komplettfahrwerke | *Performance Springs+Shocks*)																
1.4, 1.5 dCi, 1.6, 1.6 16V, 1.6 MPI 85	09.04 -	930	880	E90-26-001-01-22	A, 18, 20, 78, 161			35	35					F11-26-001-01-VA	F11-26-001-01-HA	T
SANDERO																
Pro-Kit (Performance Fahrwerksfedern | *Performance Springs*)																
1.2 16V, 1.4, 1.6, 1.6 16V, 1.6 MPI 85	06.08 -	860	880	E10-26-001-03-22	A, 18, 20			30	30					F11-26-001-03-VA	F11-26-001-01-HA	T
B12 Pro-Kit (Performance Komplettfahrwerke | *Performance Springs+Shocks*)																
1.2 16V, 1.2 16V LPG, 1.4, 1.4 MPI LPG, 1.5 dCi, 1.6, 1.6 MPI 85	06.08 -	860	880	E90-26-001-03-22	A, 18, 20, 78, 161			30	30					F11-26-001-03-VA	F11-26-001-01-HA	T
CHARADE																
Pro-Kit (Performance Fahrwerksfedern | *Performance Springs*)																
1.33 16V	05.11 -	895	905	E10-82-019-01-22	A, 18, 20			25	25					F11-82-019-01-VA	F11-82-019-01-HA	T
MATERIA (M4_)																
Pro-Kit (Performance Fahrwerksfedern | *Performance Springs*)																
1.3, 1.5	10.06 -	830	830	E10-24-010-01-22	A, 18, 20			30	15					F11-24-010-01-VA	F11-24-010-01-HA	T
500																
Pro-Kit (Performance Fahrwerksfedern | *Performance Springs*)																
0.9, 1.2, 1.3 D Multijet, 1.4	10.07 -	830	640	E10-30-013-01-22	A, 18, 20			30	25					F11-30-013-01-VA	F11-30-013-01-HA	T
1.4 Abarth	08.08 -	830	640	E10-30-013-01-22	A, 18, 20			20	20					F11-30-013-01-VA	F11-30-013-01-HA	T
Sportline (Performance Fahrwerksfedern Sport | *Sport Performance Springs*)																
0.9, 1.2, 1.3 D Multijet, 1.4	10.07 -	830	640	E20-30-013-01-22	A, 18, 20			45-50	30					F21-30-013-01-VA	F21-30-013-01-HA	T
B12 Pro-Kit (Performance Komplettfahrwerke | *Performance Springs+Shocks*)																
0.9, 1.2, 1.3 D Multijet, 1.4	10.07 -	830	640	E90-30-013-01-22	A, 18, 20, 78, 161, 194			30	30					F11-30-013-01-VA	F11-30-013-01-HA	T
1.4 Abarth	10.07 -	830	640	E90-30-013-01-22	A, 18, 20, 78, 161, 194			20	20					F11-30-013-01-VA	F11-30-013-01-HA	T
B12 Sportline (Performance Komplettfahrwerke Sport | *Sport Performance Springs+Shocks*)																
0.9, 1.2, 1.3 D Multijet, 1.4	10.07 -	830	640	E95-30-013-01-22	A, 18, 20, 78, 161, 194			45-50	30					F21-30-013-01-VA	F21-30-013-01-HA	T
Pro-Street-S (Gewindefahrwerke - höhenverstellbar | *Coil-Overs-Adjustable Ride Hight*)																
0.9, 1.2, 1.3 D Multijet, 1.4, 1.4 Abarth	10.07 -	830	735	PSS65-30-013-01-22	A, 25, 37, 45, 160			25-55	25-55							T
500 C																
Pro-Kit (Performance Fahrwerksfedern | *Performance Springs*)																
0.9, 1.2, 1.3 D Multijet, 1.4	09.09 -	830	640	E10-30-013-01-22	A, 18, 20			30	25					F11-30-013-01-VA	F11-30-013-01-HA	T
1.4 Abarth	09.09 -	830	640	E10-30-013-01-22	A, 18, 20			20	20					F11-30-013-01-VA	F11-30-013-01-HA	T
Sportline (Performance Fahrwerksfedern Sport | *Sport Performance Springs*)																
0.9, 1.2, 1.3 D Multijet, 1.4	09.09 -	830	640	E20-30-013-01-22	A, 18, 20			45-50	30					F21-30-013-01-VA	F21-30-013-01-HA	T
B12 Pro-Kit (Performance Komplettfahrwerke | *Performance Springs+Shocks*)																
0.9, 1.2, 1.3 D Multijet, 1.4	09.09 -	830	640	E90-30-013-01-22	A, 18, 20, 78, 161, 195			30	30					F21-30-013-01-VA	F21-30-013-01-HA	T
1.4 Abarth	09.09 -	830	640	E90-30-013-01-22	A, 18, 20, 78, 161, 195			20	20					F21-30-013-01-VA	F21-30-013-01-HA	T
B12 Sportline (Performance Komplettfahrwerke Sport | *Sport Performance Springs+Shocks*)																
0.9, 1.2, 1.3 D Multijet, 1.4	09.09 -	830	640	E95-30-013-01-22	A, 18, 20, 78, 161, 195			45-50	30					F21-30-013-01-VA	F21-30-013-01-HA	T

FIAT

Modell *Model*	Baujahr *Year*	Achslast Vorne kg *Front Axle Load kg*	Achslast Hinten kg *Rear Axle Load kg*	Artikel-Nr. *Part-No.*	Hinweise *Notes*	ab Nachtrag ...xx BE *from suppl. ...xx of type approval*	bis Nachtrag ...xx BE *to suppl. ...xx of type approval*	ca. Tieferl. Vorne mm *ca. Lowering Front mm*	ca. Tieferl. Hinten mm *ca. Lowering Rear mm*	Ø Vorne mm *Ø Front mm*	Ø Hinten mm *Ø Rear mm*	Verstellbarkeit Vorne *Adjustable Front*	Verstellbarkeit Hinten *Adjustable Rear*	Ersatzteilbez. Vorne *Spare Part Marking Front*	Ersatzteilbez. Hinten *Spare Part Marking Rear*	Gutachten *Homologation*
500L																
Pro-Kit (Performance Fahrwerksfedern | *Performance Springs*)																
1.3 D Multijet, 1.6 D Multijet	09.12 -	1050	1000	E10-30-013-06-22	A, 18, 20			25	20					F11-30-013-06-VA	F11-30-013-05-HA	T
0.9, 1.4	09.12 -	1050	1000	E10-30-013-05-22	A, 18, 20			25	20					F11-30-013-05-VA	F11-30-013-05-HA	T
BARCHETTA (183)																
Pro-Kit (Performance Fahrwerksfedern | *Performance Springs*)																
1.8 16V	04.95 - 05.05	850	700	E3018-240	A, 18, 20			30	30					F3018101	F3018102	T
B12 Pro-Kit (Performance Komplettfahrwerke | *Performance Springs+Shocks*)																
1.8 16V	04.95 - 05.05	850	700	E90-30-015-01-22	A, 18, 20, 78, 161			30	30					F3018101	F3018102	T
BRAVA (182)																
Pro-Kit (Performance Fahrwerksfedern | *Performance Springs*)																
1.2 16V 80	12.98 - 12.02	920	920	E3034-140	A, 18, 20, 68			30	30					F1016001	F3008002	T
1.4, 1.4 12 V, 1.6 16V, 1.8 GT 16V	10.95 - 12.02	920	920	E3016-140	A, 18, 20, 68			30	30					F3007001	F3008002	T
Anti-Roll-Kit (Performance Stabilisatoren | *Performance Sway Bars*)																
1.2 16V 80, 1.4, 1.4 12 V, 1.6 16V, 1.8 GT 16V, 1.9 D, 1.9 JTD, 1.9 JTD 105, 1.9 TD 100 S, 1.9 TD 75 S	10.95 - 12.02			E1013-320	A, 18, 20, 22, 45					26	22	nicht verstellbar *not adjustable*	nicht verstellbar *not adjustable*	AS1013320VA	AS1013320HA	T
BRAVO I (182)																
Pro-Kit (Performance Fahrwerksfedern | *Performance Springs*)																
1.2 16V 80	12.98 - 10.01	920	920	E3034-140	A, 18, 20, 68			30	30					F1016001	F3008002	T
1.4, 1.6, 1.6 16V, 1.8 GT	10.95 - 02.02	920	920	E3016-140	A, 18, 20, 68			30	30					F3007001	F3008002	T
Anti-Roll-Kit (Performance Stabilisatoren | *Performance Sway Bars*)																
1.2 16V 80, 1.4, 1.6, 1.6 16V, 1.8 GT, 1.9 D, 1.9 JTD, 1.9 JTD 105, 1.9 TD 100 S, 1.9 TD 75 S	10.95 - 02.02			E1013-320	A, 18, 20, 22, 45					26	22	nicht verstellbar *not adjustable*	nicht verstellbar *not adjustable*	AS1013320VA	AS1013320HA	T
BRAVO II (198)																
Pro-Kit (Performance Fahrwerksfedern | *Performance Springs*)																
1.4, 1.4 16V, 1.4 T-Jet	04.07 -	1000	880	E10-30-012-01-22	A, 18, 20			30	30					F11-30-012-01-VA	F11-30-012-01-HA	T
1.6 D Multijet, 1.9 D Multijet, 2.0 D Multijet	11.06 -	1090	880	E10-30-012-02-22	A, 18, 20			30	30					F11-30-012-02-VA	F11-30-012-01-HA	T
Sportline (Performance Fahrwerksfedern Sport | *Sport Performance Springs*)																
1.4, 1.4 16V, 1.4 T-Jet	04.07 -	1000	880	E20-30-012-01-22	A, 20			45-50	30					F21-30-001-02-VA	F21-30-001-02-HA	T
1.6 D Multijet, 1.9 D Multijet, 2.0 D Multijet	11.06 -	1060	880	E20-30-012-02-22	A, 20			45-50	30					F21-30-001-03-VA	F21-30-001-02-HA	T
B12 Pro-Kit (Performance Komplettfahrwerke | *Performance Springs+Shocks*)																
1.4, 1.4 16V, 1.4 T-Jet	04.07 -	1000	880	E90-30-012-01-22	A, 18, 20, 78, 82, 161			30	30					F11-30-012-01-VA	F11-30-012-01-HA	T
1.6 D Multijet, 1.9 D Multijet	11.06 -	1090	880	E90-30-012-02-22	A, 18, 20, 78, 82, 161			30	30					F11-30-012-02-VA	F11-30-012-01-HA	T
B12 Sportline (Performance Komplettfahrwerke Sport | *Sport Performance Springs+Shocks*)																
1.4, 1.4 16V, 1.4 T-Jet	04.07 -	1000	880	E95-30-012-01-22	A, 18, 20, 78, 82, 161			45-50	30					F21-30-001-02-VA	F21-30-001-02-HA	T
1.6 D Multijet, 1.9 D Multijet	11.06 -	1090	880	E95-30-012-02-22	A, 18, 20, 78, 82, 161			45-50	30					F21-30-001-03-VA	F21-30-001-02-HA	T
CINQUECENTO (170)																
Pro-Kit (Performance Fahrwerksfedern | *Performance Springs*)																
0.7, 0.7 i, 0.9, 0.9 i.e., 0.9 i.e. S	07.91 - 07.99	610	630	E3011-140	A, 18, 20			30	30					F3011001	F3011002	T
1.1 Sporting	10.94 - 01.98	610	630	E3011-140	A, 18, 20			10-15	10-15					F3011001	F3011002	T
COUPE (FA/175)																
Pro-Kit (Performance Fahrwerksfedern | *Performance Springs*)																
1.8 16V, 2.0 16V, 2.0 20V, 2.0 20V Turbo	11.93 - 08.00	1030	800	E3014-240	A, 18, 20			30	30					F1016001	F3014002	T
2.0 16V Turbo	11.93 - 08.96	1030	800	E3014-140	A, 18, 20			30	30					F3007001	F3014002	T
Anti-Roll-Kit (Performance Stabilisatoren | *Performance Sway Bars*)																
1.8 16V, 2.0 16V, 2.0 16V Turbo, 2.0 20V, 2.0 20V Turbo	11.93 - 08.00			E1013-320	A, 18, 20, 22, 45					26	22	nicht verstellbar *not adjustable*	nicht verstellbar *not adjustable*	AS1013320VA	AS1013320HA	T
CROMA (194)																
Pro-Kit (Performance Fahrwerksfedern | *Performance Springs*)																
1.9 D Multijet, 2.2 16V	06.05 -	1150	1120	E10-30-009-01-22	A, 18, 20			30-35	25-30					F11-65-007-02-VA	F6549002	T
2.4 D Multijet	06.05 -	1200	1120	E10-30-009-02-22	A, 18, 20			30-35	25-30					F11-65-007-07-VA	F6549002	T
B12 Pro-Kit (Performance Komplettfahrwerke | *Performance Springs+Shocks*)																
1.9 D Multijet, 2.2 16V	06.05 -	1150	1120	E90-30-009-01-22	A, 18, 20, 78, 161			30-35	25-30					F11-65-007-02-VA	F6549002	T
2.4 D Multijet	06.05 -	1200	1120	E90-30-009-02-22	A, 18, 20, 78, 161			30-35	25-30					F11-65-007-07-VA	F6549002	T
FREEMONT (JC)																
Pro-Kit (Performance Fahrwerksfedern | *Performance Springs*)																
2.0 JTD	08.11 -	1293	1338	E10-30-018-01-22	A, 18, 20			30	20					F11-30-018-01-FA	F11-30-018-01-RA	T
2.0 JTD 4x4	08.11 -	1293	1338	E10-30-018-02-22	A, 18			30	25					F11-30-018-02-FA	F11-30-018-01-RA	T
IDEA																
Pro-Kit (Performance Fahrwerksfedern | *Performance Springs*)																
1.3 D Multijet, 1.3 JTD, 1.4, 1.4 16V, 1.6 D Multijet, 1.9 JTD	12.03 -	1000	805	E10-30-008-01-22	A, 18, 20			25-30	25					F3033001	F3032002	T
LINEA (323)																
Pro-Kit (Performance Fahrwerksfedern | *Performance Springs*)																
1.3 D Multijet, 1.4, 1.4 T-Jet	06.07 -	1000	850	E10-30-014-01-22	A, 18, 20			30	30					F11-30-010-01-VA	F11-30-012-01-HA	T
PANDA (169)																
Pro-Kit (Performance Fahrwerksfedern | *Performance Springs*)																
1.1, 1.2, 1.3 D Multijet, 1.4	09.03 -	750	680	E10-30-007-01-22	A, 18, 20			30	30					F11-30-007-01-VA	F11-30-007-01-HA	T

FIAT

Modell *Model*	Baujahr *Year*	Achslast Vorne kg *Front Axle Load kg*	Achslast Hinten kg *Rear Axle Load kg*	Artikel-Nr. *Part-No.*	Hinweise *Notes*	ab Nachtrag ...xx BE *from suppl. ...xx of type approval*	bis Nachtrag ...xx BE *to suppl. ...xx of type approval*	ca. Tieferl. Vorne mm *ca. Lowering Front mm*	ca. Tieferl. Hinten mm *ca. Lowering Rear mm*	Ø Vorne mm *Ø Front mm*	Ø Hinten mm *Ø Rear mm*	Verstellbarkeit Vorne *Adjustable Front*	Verstellbarkeit Hinten *Adjustable Rear*	Ersatzteilbez. Vorne *Spare Part Marking Front*	Ersatzteilbez. Hinten *Spare Part Marking Rear*	Gutachten *Homologation*
PANDA (169)																
B12 Pro-Kit (Performance Komplettfahrwerke | *Performance Springs+Shocks*)																
1.1, 1.2, 1.4	09.03 -	750	680	E90-30-007-01-22	A, 18, 20, 78, 161			30	30					F11-30-007-01-VA	F11-30-007-01-HA	T
1.3 D Multijet	09.03 -	750	680	E90-30-007-02-22	A, 18, 20, 78, 161			30	30					F11-30-007-01-VA	F11-30-007-01-HA	T
PANDA (519, 319)																
Pro-Kit (Performance Fahrwerksfedern | *Performance Springs*)																
0.9, 1.2	02.12 -	870	810	E10-49-004-02-22	A, 18, 20			25	20					F11-49-004-02-VA	F11-49-004-01-HA	T
B12 Pro-Kit (Performance Komplettfahrwerke | *Performance Springs+Shocks*)																
1.2	02.12 -	870	810	E90-49-004-02-22	A, 18, 20, 78, 161			25	20					F11-49-004-02-VA	F11-49-004-01-HA	T
PANDA Van (169)																
Pro-Kit (Performance Fahrwerksfedern | *Performance Springs*)																
1.1, 1.2, 1.3 JTD	03.04 -	750	680	E10-30-007-01-22	A, 18, 20			30	30					F11-30-007-01-VA	F11-30-007-01-HA	T
PANDA Van (519)																
Pro-Kit (Performance Fahrwerksfedern | *Performance Springs*)																
0.9, 1.2	02.12 -	870	810	E10-49-004-02-22	A, 18, 20			25	20					F11-49-004-02-VA	F11-49-004-01-HA	T
PUNTO (176)																
Pro-Kit (Performance Fahrwerksfedern | *Performance Springs*)																
55 1.1	09.93 - 09.99	820	750	E3025-140	A, 18, 20			30	30					F3013201	F3013002	T
1.2 16V, 1.4 GT Turbo, 1.6, 60 1.2, 75 1.2	10.93 - 09.99	850	750	E3013-240	A, 18, 20			30	30					F3013101	F3013002	T
PUNTO (188)																
Pro-Kit (Performance Fahrwerksfedern | *Performance Springs*)																
1.2 16V 80, 1.2 60, 1.3 JTD 16V, 1.4	09.99 -	900	870	E3032-140	A, 18, 20			25-30	25					F3032001	F3032002	T
1.8 130 HGT, 1.9 DS 60, 1.9 JTD, 1.9 JTD 80	09.99 -	900	870	E3033-140	A, 18, 20			25-30	25					F3033001	F3032002	T
Sportline (Performance Fahrwerksfedern Sport | *Sport Performance Springs*)																
1.2 16V 80, 1.2 60, 1.3 JTD 16V, 1.4, 1.8 130 HGT, 1.9 DS 60, 1.9 JTD, 1.9 JTD 80	09.99 -	900	750	E20-30-001-01-22	A, 20			45-50	35-40					F21-30-001-01-VA	F21-30-001-01-HA	T
B12 Pro-Kit (Performance Komplettfahrwerke | *Performance Springs+Shocks*)																
1.2 16V 80, 1.2 60, 1.2 Bifuel, 1.3 JTD 16V, 1.4	09.99 -	900	870	E90-30-006-01-22	A, 18, 20, 78, 161			25-30	25					F3032001	F3032002	T
1.8 130 HGT, 1.9 DS 60, 1.9 JTD, 1.9 JTD 80	09.99 -	900	870	E90-30-006-02-22	A, 18, 20, 78, 161			25-30	25					F3033001	F3032002	T
B12 Sportline (Performance Komplettfahrwerke Sport | *Sport Performance Springs+Shocks*)																
1.2 16V 80, 1.2 60, 1.2 Bifuel, 1.3 JTD 16V, 1.4, 1.8 130 HGT, 1.9 DS 60, 1.9 JTD, 1.9 JTD 80	09.99 -	900	750	E95-30-006-01-22	A, 20, 78, 161			45-50	35-40					F21-30-001-01-VA	F21-30-001-01-HA	T
Pro-Street-S (Gewindefahrwerke - höhenverstellbar | *Coil-Overs-Adjustable Ride Hight*)																
1.2 16V 80, 1.2 60, 1.3 JTD 16V, 1.4, 1.8 130 HGT, 1.9 DS 60, 1.9 JTD, 1.9 JTD 80	09.99 -	900	750	PSS65-30-006-01-22	A, 25, 37, 45, 160			30-60	30-60							T
PUNTO (199)																
Pro-Kit (Performance Fahrwerksfedern | *Performance Springs*)																
0.9 Twinair Turbo, 1.2, 1.4, 1.4 Multi Air, 1.4 Turbo Multi Air	03.12 -	950	950	E10-30-010-01-22	A, 18, 20			25-30	30					F11-30-010-01-VA	F11-30-010-01-HA	T
1.3 D Multijet, 1.4 Turbo Multi Air	03.12 -	1000	950	E10-30-010-02-22	A, 18, 20			25-30	30					F11-30-010-02-VA	F11-30-010-01-HA	T
Sportline (Performance Fahrwerksfedern Sport | *Sport Performance Springs*)																
0.9 Twinair Turbo, 1.2, 1.4, 1.4 Multi Air, 1.4 Turbo Multi Air	03.12 -	950	850	E20-30-010-01-22	A, 18, 20			40-45	30					F21-30-010-01-VA	F21-30-010-01-HA	T
1.3 D Multijet, 1.4 Turbo Multi Air	03.12 -	1000	850	E20-30-010-02-22	A, 18, 20			40-45	30					F21-30-010-02-VA	F21-30-010-01-HA	T
B12 Pro-Kit (Performance Komplettfahrwerke | *Performance Springs+Shocks*)																
0.9 Twinair Turbo, 1.2, 1.4, 1.4 Multi Air, 1.4 Turbo Multi Air	03.12 -	950	950	E90-30-010-01-22	A, 18, 20, 78, 161, 196			25-30	30					F11-30-010-01-VA	F11-30-010-01-HA	T
1.3 D Multijet, 1.4 Turbo Multi Air	03.12 -	1000	950	E90-30-010-02-22	A, 18, 20, 78, 161, 196			25-30	30					F11-30-010-02-VA	F11-30-010-01-HA	T
B12 Sportline (Performance Komplettfahrwerke Sport | *Sport Performance Springs+Shocks*)																
0.9 Twinair Turbo, 1.2, 1.4, 1.4 Multi Air, 1.4 Turbo Multi Air	03.12 -	950	850	E95-30-010-01-22	A, 18, 20, 78, 161, 196			40-45	30					F21-30-010-01-VA	F21-30-010-01-HA	T
1.3 D Multijet, 1.4 Turbo Multi Air	03.12 -	1000	850	E95-30-010-02-22	A, 18, 20, 78, 161, 196			40-45	30					F21-30-010-02-VA	F21-30-010-01-HA	T
Pro-Street-S (Gewindefahrwerke - höhenverstellbar | *Coil-Overs-Adjustable Ride Hight*)																
0.9 Twinair Turbo, 1.2, 1.4, 1.4 Multi Air, 1.4 Turbo Multi Air	03.12 -	900	860	PSS65-30-010-01-22	A, 25, 45, 160			35-65	35-65							T
1.3 D Multijet, 1.4 Turbo Multi Air	03.12 -	1000	860	PSS65-30-010-02-22	A, 25, 45, 160			35-65	35-65							T
PUNTO / GRANDE PUNTO (199)																
Pro-Kit (Performance Fahrwerksfedern | *Performance Springs*)																
1.2, 1.4, 1.4 16V	10.05 -	950	950	E10-30-010-01-22	A, 18, 20			25-30	30					F11-30-010-01-VA	F11-30-010-01-HA	T
1.3 D Multijet, 1.4 T-Jet, 1.6 D Multijet, 1.9 D Multijet	10.05 -	1000	950	E10-30-010-02-22	A, 18, 20			25-30	30					F11-30-010-02-VA	F11-30-010-01-HA	T
1.4 Abarth	12.07 -	1000	950	E10-30-010-02-22	A, 18, 20			20-25	30					F11-30-010-02-VA	F11-30-010-01-HA	T
Sportline (Performance Fahrwerksfedern Sport | *Sport Performance Springs*)																
1.2, 1.4, 1.4 16V	10.05 -	950	850	E20-30-010-01-22	A, 18, 20			40-45	30					F21-30-010-01-VA	F21-30-010-01-HA	T
1.3 D Multijet, 1.4 T-Jet, 1.6 D Multijet, 1.9 D Multijet	10.05 -	1000	850	E20-30-010-02-22	A, 18, 20			40-45	30					F21-30-010-02-VA	F21-30-010-01-HA	T
1.4 Abarth	12.07 -	1000	850	E20-30-010-02-22	A, 18, 20			30-35	20					F21-30-010-02-VA	F21-30-010-01-HA	T
B12 Pro-Kit (Performance Komplettfahrwerke | *Performance Springs+Shocks*)																
1.2, 1.4, 1.4 16V	10.05 -	950	950	E90-30-010-01-22	A, 18, 20, 78, 161, 196			25-30	30					F11-30-010-01-VA	F11-30-010-01-HA	T
1.3 D Multijet, 1.4 T-Jet, 1.6 D Multijet, 1.9 D Multijet	10.05 -	1000	950	E90-30-010-02-22	A, 18, 20, 78, 161, 196			25-30	30					F11-30-010-02-VA	F11-30-010-01-HA	T
1.4 Abarth	12.07 -	1000	950	E90-30-010-02-22	A, 18, 20, 78, 161, 196			20-25	20					F11-30-010-02-VA	F11-30-010-01-HA	T

FIAT

Modell	Baujahr	Achslast Vorne kg	Achslast Hinten kg	Artikel-Nr.	Hinweise	ab Nachtrag ...xx BE	bis Nachtrag ...xx BE	ca. Tieferl. Vorne mm	ca. Tieferl. Hinten mm	Ø Vorne mm	Ø Hinten mm	Verstellbarkeit Vorne	Verstellbarkeit Hinten	Ersatzteilbez. Vorne	Ersatzteilbez. Hinten	Gutachten
Model	*Year*	*Front Axle Load kg*	*Rear Axle Load kg*	*Part-No.*	*Notes*	*from suppl. ...xx of type approval*	*to suppl. ...xx of type approval*	*ca. Lowering Front mm*	*ca. Lowering Rear mm*	*Ø Front mm*	*Ø Rear mm*	*Adjustable Front*	*Adjustable Rear*	*Spare Part Marking Front*	*Spare Part Marking Rear*	*Homologation*
PUNTO / GRANDE PUNTO (199)																
B12 Sportline (Performance Komplettfahrwerke Sport | *Sport Performance Springs+Shocks*)																
1.2, 1.4, 1.4 16V	10.05 -	950	850	E95-30-010-01-22	A, 18, 20, 78, 161, 196			40-45	30					F21-30-010-01-VA	F21-30-010-01-HA	T
1.3 D Multijet, 1.4 T-Jet, 1.6 D Multijet, 1.9 D Multijet	10.05 -	1000	850	E95-30-010-02-22	A, 18, 20, 78, 161, 196			40-45	30					F21-30-010-02-VA	F21-30-010-01-HA	T
1.4 Abarth	10.05 -	1000	850	E95-30-010-02-22	A, 18, 20, 78, 161, 196			30-35	20					F21-30-010-02-VA	F21-30-010-01-HA	T
Pro-Street-S (Gewindefahrwerke - höhenverstellbar | *Coil-Overs-Adjustable Ride Hight*)																
1.2, 1.4, 1.4 16V	10.05 -	900	860	PSS65-30-010-01-22	A, 25, 45, 160			35-65	35-65							T
1.3 D Multijet, 1.4 T-Jet, 1.6 D Multijet, 1.9 D Multijet, 1.4 Abarth	10.05 -	1000	860	PSS65-30-010-02-22	A, 25, 45, 160			35-65	35-65							T
PUNTO Cabriolet (176C)																
PUNTO Convertible (176C)																
Pro-Kit (Performance Fahrwerksfedern | *Performance Springs*)																
60 1.2, 85 16V 1.2, 90 1.6	04.94 - 06.00	850	750	E3013-240	A, 18, 20			30	30					F3013101	F3013002	T
PUNTO EVO (199)																
Pro-Kit (Performance Fahrwerksfedern | *Performance Springs*)																
0.9 Twinair Turbo, 1.2, 1.4, 1.4 16V	07.09 - 03.12	950	950	E10-30-010-01-22	A, 18, 20			25-30	30					F11-30-010-01-VA	F11-30-010-01-HA	T
1.3 D Multijet, 1.6 D Multijet	07.08 - 02.12	1000	950	E10-30-010-02-22	A, 18, 20			25-30	30					F11-30-010-02-VA	F11-30-010-01-HA	T
Sportline (Performance Fahrwerksfedern Sport | *Sport Performance Springs*)																
0.9 Twinair Turbo, 1.2, 1.4, 1.4 16V	07.09 - 03.12	950	850	E20-30-010-01-22	A, 18, 20			40-45	30					F21-30-010-01-VA	F21-30-010-01-HA	T
1.3 D Multijet, 1.6 D Multijet	07.08 - 02.12	1000	850	E20-30-010-02-22	A, 18, 20			40-45	30					F21-30-010-02-VA	F21-30-010-01-HA	T
B12 Pro-Kit (Performance Komplettfahrwerke | *Performance Springs+Shocks*)																
0.9 Twinair Turbo, 1.2, 1.4, 1.4 16V	07.09 - 02.12	950	950	E90-30-010-01-22	A, 18, 20, 78, 161, 196			25-30	30					F11-30-010-01-VA	F11-30-010-01-HA	T
1.3 D Multijet, 1.6 D Multijet	07.08 - 02.12	1000	950	E90-30-010-02-22	A, 18, 20, 78, 161, 196			25-30	30					F11-30-010-02-VA	F11-30-010-01-HA	T
B12 Sportline (Performance Komplettfahrwerke Sport | *Sport Performance Springs+Shocks*)																
0.9 Twinair Turbo, 1.2, 1.4, 1.4 16V	07.09 - 02.12	950	950	E95-30-010-01-22	A, 18, 20, 78, 161, 196			40-45	30					F21-30-010-01-VA	F21-30-010-01-HA	T
1.3 D Multijet, 1.6 D Multijet	07.08 - 02.12	1000	950	E95-30-010-02-22	A, 18, 20, 78, 161, 196			40-45	30					F21-30-010-02-VA	F21-30-010-01-HA	T
Pro-Street-S (Gewindefahrwerke - höhenverstellbar | *Coil-Overs-Adjustable Ride Hight*)																
0.9 Twinair Turbo, 1.2, 1.4, 1.4 16V	07.09 - 03.12	900	860	PSS65-30-010-01-22	A, 25, 45, 160			35-65	35-65							T
1.4 Abarth, 1.3 D Multijet, 1.6 D Multijet	07.08 - 02.12	1000	860	PSS65-30-010-02-22	A, 25, 45, 160			35-65	35-65							T
PUNTO EVO Kasten (199)																
PUNTO EVO Box (199)																
Pro-Kit (Performance Fahrwerksfedern | *Performance Springs*)																
1.4	03.09 -	950	950	E10-30-010-01-22	A, 18, 20			25-30	30					F11-30-010-01-VA	F11-30-010-01-HA	T
1.3 D Multijet	03.09 -	1000	950	E10-30-010-02-22	A, 18, 20			25-30	30					F11-30-010-02-VA	F11-30-010-01-HA	T
Sportline (Performance Fahrwerksfedern Sport | *Sport Performance Springs*)																
1.4	03.09 -	950	850	E20-30-010-01-22	A, 18, 20			40-45	30					F21-30-010-01-VA	F21-30-010-01-HA	T
1.3 D Multijet	03.09 -	1000	850	E20-30-010-02-22	A, 18, 20			40-45	30					F21-30-010-02-VA	F21-30-010-01-HA	T
B12 Pro-Kit (Performance Komplettfahrwerke | *Performance Springs+Shocks*)																
1.4	03.09 -	950	950	E90-30-010-01-22	A, 18, 20, 78, 161, 196			25-30	30					F11-30-010-01-VA	F11-30-010-01-HA	T
1.3 D Multijet	03.09 -	1000	950	E90-30-010-02-22	A, 18, 20, 78, 161, 196			25-30	30					F11-30-010-02-VA	F11-30-010-01-HA	T
B12 Sportline (Performance Komplettfahrwerke Sport | *Sport Performance Springs+Shocks*)																
1.4	03.09 -	950	850	E95-30-010-01-22	A, 18, 20, 78, 161, 196			40-45	30					F21-30-010-01-VA	F21-30-010-01-HA	T
1.3 D Multijet	03.09 -	1000	850	E95-30-010-02-22	A, 18, 20, 78, 161, 196			40-45	30					F21-30-010-02-VA	F21-30-010-01-HA	T
Pro-Street-S (Gewindefahrwerke - höhenverstellbar | *Coil-Overs-Adjustable Ride Hight*)																
1.4	03.09 -	900	860	PSS65-30-010-01-22	A, 25, 45, 160			35-65	35-65							T
1.3 D Multijet	03.09 -	1000	860	PSS65-30-010-02-22	A, 25, 45, 160			35-65	35-65							T
PUNTO Van (199)																
Pro-Kit (Performance Fahrwerksfedern | *Performance Springs*)																
1.3 D Multijet	03.09 -	1000	950	E10-30-010-02-22	A, 18, 20			25-30	30					F11-30-010-02-VA	F11-30-010-01-HA	T
Sportline (Performance Fahrwerksfedern Sport | *Sport Performance Springs*)																
1.3 D Multijet	03.09 -	1000	850	E20-30-010-02-22	A, 18, 20			40-45	30					F21-30-010-02-VA	F21-30-010-01-HA	T
Pro-Street-S (Gewindefahrwerke - höhenverstellbar | *Coil-Overs-Adjustable Ride Hight*)																
1.3 D Multijet	03.09 -	1000	850	PSS65-30-010-02-22	A, 25, 45, 160			35-65	35-65							T
SCUDO Combinato (220P)																
Pro-Kit (Performance Fahrwerksfedern | *Performance Springs*)																
1.6, 1.9 D, 1.9 TD, 1.9 TD Eco, 2.0 JTD, 2.0 JTD 16V	02.96 - 12.06	1230	1100	E3015-140	A, 18, 20			25-30	30					F3015001	F3015002	T
SCUDO Kasten (220L)																
SCUDO Box (220L)																
Pro-Kit (Performance Fahrwerksfedern | *Performance Springs*)																
1.6, 1.9 D, 1.9 TD, 2.0, 2.0 JTD, 2.0 JTD 16V	02.96 - 12.06	1230	1100	E3015-140	A, 18, 20			25-30	30					F3015001	F3015002	T
SEDICI																
Pro-Kit (Performance Fahrwerksfedern | *Performance Springs*)																
1.6 16V	06.06 -	870	880	E10-80-009-01-22	A, 18, 20			25	25					F11-80-009-01-VA	F11-80-009-01-HA	T
SEICENTO (187)																
Pro-Kit (Performance Fahrwerksfedern | *Performance Springs*)																
0.9, 1.1	01.98 - 01.10	610	630	E3029-140	A, 18, 20, 68			30	30					F3011001	F3011002	T

FIAT

Modell	Baujahr	Achslast Vorne kg	Achslast Hinten kg	Artikel-Nr.	Hinweise	ab Nachtrag ...xx BE	bis Nachtrag ...xx BE	ca. Tieferl. Vorne mm	ca. Tieferl. Hinten mm	Ø Vorne mm	Ø Hinten mm	Verstellbarkeit Vorne	Verstellbarkeit Hinten	Ersatzteilbez. Vorne	Ersatzteilbez. Hinten	Gutachten
Model	*Year*	*Front Axle Load kg*	*Rear Axle Load kg*	*Part-No.*	*Notes*	*from suppl. ...xx of type approval*	*to suppl. ...xx of type approval*	*ca. Lowering Front mm*	*ca. Lowering Rear mm*	*Ø Front mm*	*Ø Rear mm*	*Adjustable Front*	*Adjustable Rear*	*Spare Part Marking Front*	*Spare Part Marking Rear*	*Homologation*
SEICENTO Van (187)																
Pro-Kit (Performance Fahrwerksfedern | *Performance Springs*)																
0.9, 1.1	01.98 - 01.10	610	630	E3029-140	A, 18, 20, 68			30	30					F3011001	F3011002	T
STILO (192)																
Pro-Kit (Performance Fahrwerksfedern | *Performance Springs*)																
1.2 16V, 1.4 16V, 1.6 16V, 1.8 16V, 1.9 D Multijet, 1.9 JTD	10.01 - 11.06	1020	940	E10-30-001-01-22	A, 18, 20			30	30					F11-30-001-01-VA	F11-30-001-01-HA	T
1.9 JTD, 2.4 20V	10.01 - 11.06	1030	940	E10-30-001-02-22	A, 18, 20			30	30					F11-30-001-02-VA	F11-30-001-01-HA	T
Sportline (Performance Fahrwerksfedern Sport | *Sport Performance Springs*)																
1.2 16V, 1.4 16V, 1.6 16V, 1.8 16V, 1.9 D Multijet, 1.9 JTD	10.01 - 11.06	1020	940	E20-30-001-02-22	A, 18, 20			45-50	30					F21-30-001-02-VA	F21-30-001-02-HA	T
1.9 JTD, 2.4 20V	10.01 - 11.06	1030	940	E20-30-001-03-22	A, 18, 20			45-50	30					F21-30-001-03-VA	F21-30-001-02-HA	T
B12 Pro-Kit (Performance Komplettfahrwerke | *Performance Springs+Shocks*)																
1.2 16V, 1.4 16V, 1.6 16V, 1.8 16V, 1.9 D Multijet, 1.9 JTD	10.01 - 11.06	1020	940	E90-30-001-01-22	A, 18, 20, 78, 82, 161			30	30					F11-30-001-01-VA	F11-30-001-01-HA	T
1.9 JTD	10.01 - 11.06	1030	940	E90-30-001-03-22	A, 18, 20, 78, 82, 161			30	30					F11-30-001-02-VA	F11-30-001-01-HA	T
B12 Sportline (Performance Komplettfahrwerke Sport | *Sport Performance Springs+Shocks*)																
1.2 16V, 1.4 16V, 1.6 16V, 1.8 16V, 1.9 D Multijet, 1.9 JTD	10.01 - 11.06	1020	940	E95-30-001-01-22	A, 18, 20, 78, 82, 161			45-50	30					F21-30-001-02-VA	F21-30-001-02-HA	T
1.9 JTD	10.01 - 11.06	1030	940	E95-30-001-03-22	A, 18, 20, 78, 82, 161			45-50	30					F21-30-001-03-VA	F21-30-001-02-HA	T
STILO Multi Wagon (192)																
Pro-Kit (Performance Fahrwerksfedern | *Performance Springs*)																
1.4 16V, 1.6 16V, 1.8 16V, 1.9 D, 1.9 D Multijet, 1.9 JTD	01.03 - 08.08	1020	980	E10-30-001-04-22	A, 18, 20			30	30					F11-30-001-01-VA	F11-30-001-04-HA	T
1.9 JTD	01.03 - 08.08	1030	980	E10-30-001-05-22	A, 18, 20			30	30					F11-30-001-02-VA	F11-30-001-04-HA	T
B12 Pro-Kit (Performance Komplettfahrwerke | *Performance Springs+Shocks*)																
1.4 16V, 1.6 16V, 1.8 16V, 1.9 D, 1.9 D Multijet, 1.9 JTD	01.03 - 08.08	1020	980	E90-30-001-05-22	A, 18, 20, 78, 82, 161			30	30					F11-30-001-01-VA	F11-30-001-04-HA	T
1.9 JTD	09.03 - 08.08	1030	980	E90-30-001-06-22	A, 18, 20, 78, 82, 161			30	30					F11-30-001-02-VA	F11-30-001-04-HA	T
ULYSSE (220)																
Pro-Kit (Performance Fahrwerksfedern | *Performance Springs*)																
1.8, 1.9 TD, 2.0, 2.0 16V, 2.0 JTD, 2.0 JTD 16V, 2.0 Turbo, 2.1 TD	06.94 - 08.02	1230	1300	E3015-140	A, 18, 20			30	10					F3015001	F3015002	T
ULYSSE (179AX)																
Pro-Kit (Performance Fahrwerksfedern | *Performance Springs*)																
2.0, 2.0 D Multijet, 2.0 JTD, 2.2 D Multijet, 2.2 JTD, 3.0	08.02 - 06.11	1370	1300	E10-70-005-01-22	A, 18, 20			30	10					F3015001	F3015002	T

FORD

Modell	Baujahr	Achslast Vorne kg	Achslast Hinten kg	Artikel-Nr.	Hinweise	ab Nachtrag ...xx BE	bis Nachtrag ...xx BE	ca. Tieferl. Vorne mm	ca. Tieferl. Hinten mm	Ø Vorne mm	Ø Hinten mm	Verstellbarkeit Vorne	Verstellbarkeit Hinten	Ersatzteilbez. Vorne	Ersatzteilbez. Hinten	Gutachten
Model	*Year*	*Front Axle Load kg*	*Rear Axle Load kg*	*Part-No.*	*Notes*	*from suppl. ...xx of type approval*	*to suppl. ...xx of type approval*	*ca. Lowering Front mm*	*ca. Lowering Rear mm*	*Ø Front mm*	*Ø Rear mm*	*Adjustable Front*	*Adjustable Rear*	*Spare Part Marking Front*	*Spare Part Marking Rear*	*Homologation*
B-MAX																
Pro-Kit (Performance Fahrwerksfedern | *Performance Springs*)																
1.0 EcoBoost, 1.4, 1.5 TDCi, 1.6 TDCi, 1.6 Ti	10.12 -	915	925	E10-35-027-01-22	A, 18, 20			25	25					F11-35-027-01-VA	F11-15-001-01-HA	T
B-MAX Van																
Pro-Kit (Performance Fahrwerksfedern | *Performance Springs*)																
1.0 EcoBoost, 1.4, 1.5 TDCi, 1.6 TDCi, 1.6 Ti	10.12 -	915	925	E10-35-027-01-22	A, 18, 20			25	25					F11-35-027-01-VA	F11-15-001-01-HA	T
C-MAX																
Pro-Kit (Performance Fahrwerksfedern | *Performance Springs*)																
1.6, 1.8, 1.8 Flexifuel, 2.0	02.07 -	1015	1070	E10-35-014-01-22	A, 18, 20			30	30					F11-35-014-01-VA	F11-35-014-01-HA	ABE
1.6 TDCi, 1.8 TDCi, 2.0 TDCi	02.07 -	1070	1070	E10-35-014-02-22	A, 18, 20			30	30					F11-35-014-02-VA	F11-35-014-01-HA	ABE
B12 Pro-Kit (Performance Komplettfahrwerke | *Performance Springs+Shocks*)																
1.6, 1.8, 2.0	02.07 -	990	1065	E90-35-014-01-22	A, 18, 20, 69, 78, 161			30	30					F11-35-014-01-VA	F11-35-014-01-HA	ABE
1.6 TDCi, 1.8 TDCi, 2.0 TDCi	02.07 -	1070	1070	E90-35-014-02-22	A, 18, 20, 69, 78, 161			30	30					F11-35-014-02-VA	F11-35-014-01-HA	ABE
C-MAX II																
Pro-Kit (Performance Fahrwerksfedern | *Performance Springs*)																
1.0 EcoBoost, 1.5 EcoBoost, 1.6 Ti, 1.6 EcoBoost, 1.6 Flexifuel	12.10 -	995	1020	E10-35-024-01-22	A, 18, 20, 68			25	25					F11-35-023-01-VA	F11-55-009-01-HA	T
1.5 EcoBoost, 1.6 Ti, 1.6 EcoBoost, 1.6 Flexifuel, 1.5 TDCi, 1.5 TDCi ECOnetic, 1.6 TDCi	12.10 -	1055	1020	E10-35-024-02-22	A, 18, 20, 68			25	25					F11-84-006-07-VA	F11-55-009-01-HA	T
2.0 TDCi	12.10 -	1175	1020	E10-35-024-03-22	A, 18, 20, 68			25	25					F11-35-014-02-VA	F11-55-009-01-HA	T
C-MAX II Van																
Pro-Kit (Performance Fahrwerksfedern | *Performance Springs*)																
1.0 EcoBoost, 1.5 EcoBoost, 1.6 EcoBoost	12.10 -	995	1020	E10-35-024-01-22	A, 18, 20, 68			25	25					F11-35-023-01-VA	F11-55-009-01-HA	T
1.5 EcoBoost, 1.6 EcoBoost, 1.5 TDCi, 1.5 TDCi ECOnetic, 1.6 TDCi	12.10 -	1055	1020	E10-35-024-02-22	A, 18, 20, 68			25	25					F11-84-006-07-VA	F11-55-009-01-HA	T
2.0 TDCi	12.10 -	1175	1020	E10-35-024-03-22	A, 18, 20, 68			25	25					F11-35-014-02-VA	F11-55-009-01-HA	T
FIESTA V (JH_, JD_)																
Pro-Kit (Performance Fahrwerksfedern | *Performance Springs*)																
1.0, 1.25 16V, 1.3, 1.4 16V, 1.6 16V	11.01 -	820	800	E10-35-010-01-22	A, 18, 20			35	30					F11-35-010-01-VA	F11-35-010-01-HA	ABE
1.4 TDCi, 1.6 TDCi, 1.6 16V, ST150	11.01 -	860	800	E10-35-010-02-22	A, 18, 20			35	30					F11-35-010-02-VA	F11-35-010-01-HA	ABE
B12 Pro-Kit (Performance Komplettfahrwerke | *Performance Springs+Shocks*)																
1.0, 1.25 16V, 1.3, 1.4 16V, 1.6 16V	11.01 -	820	800	E90-35-010-01-22	A, 18, 20, 78, 161			35	30					F11-35-010-01-VA	F11-35-010-01-HA	ABE
1.4 TDCi, 1.6 TDCi, 1.6 16V, ST150	11.01 -	860	800	E90-35-010-02-22	A, 18, 20, 78, 161			35	30					F11-35-010-02-VA	F11-35-010-01-HA	ABE
FIESTA VI																
Pro-Kit (Performance Fahrwerksfedern | *Performance Springs*)																
1.4 TDCi, 1.5 TDCi, 1.6 TDCi	10.08 -	850	785	E10-35-020-02-22	A, 18, 20			30	30					F11-35-020-02-VA	F11-35-020-01-HA	T
1.0, 1.0 EcoBoost, 1.25, 1.4, 1.6, 1.6 Ti	10.08 -	850	785	E10-35-020-01-22	A, 18, 20			30	30					F11-35-020-01-VA	F11-35-020-01-HA	T
1.0 Sport	10.08 -	850	785	E10-35-020-01-22	A, 18, 20			20	20					F11-35-020-01-VA	F11-35-020-01-HA	T
1.6 ST	03.13 -	850	785	E10-35-020-02-22	A, 18, 20			20	20					F11-35-020-02-VA	F11-35-020-01-HA	T

FORD

FIAT

FORD

Modell	Baujahr	Achslast Vorne kg	Achslast Hinten kg	Artikel-Nr.	Hinweise	ab Nachtrag ...xx BE	bis Nachtrag ...xx BE	ca. Tieferl. Vorne mm	ca. Tieferl. Hinten mm	Ø Vorne mm	Ø Hinten mm	Verstellbarkeit Vorne	Verstellbarkeit Hinten	Ersatzteilbez. Vorne	Ersatzteilbez. Hinten	Gutachten
Model	*Year*	*Front Axle Load kg*	*Rear Axle Load kg*	*Part-No.*	*Notes*	*from suppl. ...xx of type approval*	*to suppl. ...xx of type approval*	*ca. Lowering Front mm*	*ca. Lowering Rear mm*	*Ø Front mm*	*Ø Rear mm*	*Adjustable Front*	*Adjustable Rear*	*Spare Part Marking Front*	*Spare Part Marking Rear*	*Homologation*
FIESTA VI																
Pro-Street-S (Gewindefahrwerke - höhenverstellbar | *Coil-Overs-Adjustable Ride Hight*)																
1.0, 1.0 EcoBoost, 1.0 Sport, 1.25, 1.4, 1.6, 1.6 Ti, 1.4 TDCi, 1.5 TDCi, 1.6 TDCi	10.08 -	850	765	PSS65-35-020-01-22	A, 18, 20, 24, 25, 45, 160			30-55	30-60							T
FIESTA VI Van																
Pro-Kit (Performance Fahrwerksfedern | *Performance Springs*)																
1.0 EcoBoost, 1.25	10.12 -	850	785	E10-35-020-01-22	A, 18, 20			30	30					F11-35-020-01-VA	F11-35-020-01-HA	T
1.4 TDCi, 1.5 TDCi, 1.6 TDCi	01.09 -	850	785	E10-35-020-02-22	A, 18, 20			30	30					F11-35-020-02-VA	F11-35-020-01-HA	T
1.6 ST	03.13 -	850	785	E10-35-020-02-22	A, 18, 20			20	20					F11-35-020-02-VA	F11-35-020-01-HA	T
Pro-Street-S (Gewindefahrwerke - höhenverstellbar | *Coil-Overs-Adjustable Ride Hight*)																
1.0 EcoBoost, 1.25, 1.4 TDCi, 1.5 TDCi, 1.6 TDCi	01.09 -	850	765	PSS65-35-020-01-22	A, 18, 20, 24, 25, 45, 160			30-55	30-60							T
FOCUS (DAW, DBW)																
Pro-Kit (Performance Fahrwerksfedern | *Performance Springs*)																
1.4 16V, 1.6 16V, 1.6 16V Flexifuel	10.98 - 11.04	855	905	E3587-140	A, 18, 20			30	30					F3587001	F3587002	ABE
1.8 16V, 2.0 16V	10.98 - 11.04	915	905	E3588-140	A, 18, 20			30	30					F3588001	F3587002	ABE
ST170	03.02 - 11.04	915	905	E3588-140	A, 18, 20			20-25	20					F3588001	F3587002	ABE
1.8 DI / TDDi, 1.8 TDCi, 1.8 Turbo DI / TDDi	10.98 - 11.04	965	905	E3592-140	A, 18, 20			30	30					F3590001	F3587002	ABE
Anti-Roll-Kit (Performance Stabilisatoren | *Performance Sway Bars*)																
1.4 16V, 1.6 16V, 1.6 16V Flexifuel, 1.8 16V, 1.8 DI / TDDi, 1.8 TDCi, 1.8 Turbo DI / TDDi, 2.0 16V	10.98 - 11.04			E40-35-001-01-11	A, 18, 20, 22, 45					23	26	nicht verstellbar *not adjustable*	nicht verstellbar *not adjustable*	AS41-35-001-01-VA	AS41-35-001-01-HA	T
B12 Pro-Kit (Performance Komplettfahrwerke | *Performance Springs+Shocks*)																
1.4 16V, 1.6 16V, 1.6 16V Flexifuel	10.98 - 11.04	855	905	E90-35-001-01-22	A, 18, 20, 78, 161			30	30					F3587001	F3587002	ABE
1.8 16V, 2.0 16V	10.98 - 11.04	915	905	E90-35-001-02-22	A, 18, 20, 78, 161			30	30					F3588001	F3587002	ABE
ST170	03.02 - 11.04	915	905	E90-35-001-02-22	A, 18, 20, 78, 161			20-25	20					F3588001	F3587002	ABE
1.8 DI / TDDi, 1.8 TDCi, 1.8 Turbo DI / TDDi	10.98 - 11.04	965	905	E90-35-001-05-22	A, 18, 20, 78, 161			30	30					F3590001	F3587002	ABE
Pro-Street-S (Gewindefahrwerke - höhenverstellbar | *Coil-Overs-Adjustable Ride Hight*)																
1.4 16V, 1.6 16V, 1.6 16V Flexifuel, 1.8 16V, 1.8 DI / TDDi, 1.8 TDCi, 1.8 Turbo DI / TDDi, 2.0 16V	10.98 - 11.04	965	930	PSS65-35-001-01-22	A, 24, 25, 45, 160			35-65	35-65							T
FOCUS C-MAX																
Pro-Kit (Performance Fahrwerksfedern | *Performance Springs*)																
1.6, 1.6 Ti, 1.8, 1.8 Flexifuel, 2.0	10.03 - 03.07	1015	1070	E10-35-014-01-22	A, 18, 20			30	30					F11-35-014-01-VA	F11-35-014-01-HA	ABE
1.6 TDCi, 1.8 TDCi, 2.0 TDCi	10.03 - 03.07	1070	1070	E10-35-014-02-22	A, 18, 20			30	30					F11-35-014-02-VA	F11-35-014-01-HA	ABE
B12 Pro-Kit (Performance Komplettfahrwerke | *Performance Springs+Shocks*)																
1.6, 1.6 Ti, 1.8, 1.8 Flexifuel, 2.0	10.03 - 03.07	1015	1070	E90-35-014-01-22	A, 18, 20, 69, 78, 161			30	30					F11-35-014-01-VA	F11-35-014-01-HA	ABE
1.6 TDCi, 1.8 TDCi, 2.0 TDCi	10.03 - 03.07	1070	1070	E90-35-014-02-22	A, 18, 20, 69, 78, 161			30	30					F11-35-014-02-VA	F11-35-014-01-HA	ABE
FOCUS II (DA_)																
Pro-Kit (Performance Fahrwerksfedern | *Performance Springs*)																
1.4, 1.6, 1.6 Ti, 1.8, 1.8 Flexifuel, 2.0	11.04 -	1005	1015	E10-35-016-01-22	A, 18, 20			30	30					F11-55-008-02-VA	F11-35-016-01-HA	T
2.5 RS	01.09 -	1040	920	E10-35-016-09-22	A, 18, 20			25	15					F11-35-016-09-VA	F11-35-016-09-HA	T
2.5 ST	10.05 -	1050	915	E10-35-016-05-22	A, 18, 20			20	25					F11-84-006-07-VA	F11-35-016-05-HA	ABE
1.6 TDCi, 1.8 TDCi, 2.0, 2.0 TDCi	11.04 -	1070	1015	E10-35-016-02-22	A, 18, 20			30	30					F11-35-014-02-VA	F11-35-016-01-HA	T
B12 Pro-Kit (Performance Komplettfahrwerke | *Performance Springs+Shocks*)																
1.4, 1.6, 1.6 Ti, 1.8, 1.8 Flexifuel, 2.0	11.04 -	1005	1015	E90-35-016-01-22	A, 18, 20, 78, 161			30	30					F11-55-008-02-VA	F11-35-016-01-HA	T
2.5 ST	10.05 -	1050	915	E90-35-016-05-22	A, 18, 20, 78, 161			20	25					F11-84-006-07-VA	F11-35-016-05-HA	ABE
1.6 TDCi, 1.8 TDCi, 2.0, 2.0 TDCi	11.04 -	1070	1015	E90-35-016-02-22	A, 18, 20, 78, 161			30	30					F11-35-014-02-VA	F11-35-016-01-HA	T
Pro-Street-S (Gewindefahrwerke - höhenverstellbar | *Coil-Overs-Adjustable Ride Hight*)																
1.4, 1.6, 1.6 TDCi, 1.6 Ti, 1.8, 1.8 Flexifuel, 1.8 TDCi, 2.0, 2.0 TDCi, 2.5 ST	11.04 -	1070	1015	PSS65-35-016-01-22	A, 18, 20, 23, 25, 45, 160			35-65	35-65							T
FOCUS II Cabriolet																
FOCUS II Convertible																
Pro-Kit (Performance Fahrwerksfedern | *Performance Springs*)																
1.6, 2.0	10.06 -	990	1065	E10-35-016-06-22	A, 18, 20			30	30					F11-35-014-01-VA	F11-35-014-01-HA	T
2.0 TDCi	10.06 -	1070	1065	E10-35-016-07-22	A, 18, 20			30	30					F11-35-014-02-VA	F11-35-014-01-HA	T
B12 Pro-Kit (Performance Komplettfahrwerke | *Performance Springs+Shocks*)																
1.6, 2.0	10.06 -	990	1065	E90-35-016-06-22	A, 18, 20, 78, 161			30	30					F11-35-014-01-VA	F11-35-014-01-HA	T
2.0 TDCi	10.06 -	1070	1065	E90-35-016-07-22	A, 18, 20, 78, 161			30	30					F11-35-014-02-VA	F11-35-014-01-HA	T
FOCUS II Kombi (DA_)																
FOCUS II Estate (DA_)																
Pro-Kit (Performance Fahrwerksfedern | *Performance Springs*)																
1.4, 1.6, 1.6 Ti, 1.8, 1.8 Flexifuel	11.04 -	1005	1090	E10-35-016-03-22	A, 18, 20			30	30					F11-55-008-02-VA	F11-35-016-03-HA	ABE
1.6 TDCi, 1.8 TDCi, 2.0, 2.0 TDCi	11.04 -	1070	1090	E10-35-016-04-22	A, 18, 20			30	30					F11-35-014-02-VA	F11-35-016-03-HA	ABE
B12 Pro-Kit (Performance Komplettfahrwerke | *Performance Springs+Shocks*)																
1.4, 1.6, 1.6 Ti, 1.8, 1.8 Flexifuel	11.04 -	1005	1090	E90-35-016-03-22	A, 18, 20, 78, 161			30	30					F11-55-008-02-VA	F11-35-016-03-HA	ABE
1.6 TDCi, 1.8 TDCi, 2.0, 2.0 TDCi	11.04 -	1070	1090	E90-35-016-04-22	A, 18, 20, 78, 161			30	30					F11-35-014-02-VA	F11-35-016-03-HA	ABE

FORD

Modell *Model*	Baujahr *Year*	Achslast Vorne kg *Front Axle Load kg*	Achslast Hinten kg *Rear Axle Load kg*	Artikel-Nr. *Part-No.*	Hinweise *Notes*	ab Nachtrag ...xx BE *from suppl. ...xx of type approval*	bis Nachtrag ...xx BE *to suppl. ...xx of type approval*	ca. Tieferl. Vorne mm *ca. Lowering Front mm*	ca. Tieferl. Hinten mm *ca. Lowering Rear mm*	Ø Vorne mm *Ø Front mm*	Ø Hinten mm *Ø Rear mm*	Verstellbarkeit Vorne *Adjustable Front*	Verstellbarkeit Hinten *Adjustable Rear*	Ersatzteilbez. Vorne *Spare Part Marking Front*	Ersatzteilbez. Hinten *Spare Part Marking Rear*	Gutachten *Homologation*
FOCUS II Stufenheck (DA_) ***FOCUS II Saloon (DA_)***																
Pro-Kit (Performance Fahrwerksfedern | *Performance Springs*)																
1.4, 1.6, 1.6 Ti, 1.8, 1.8 Flexifuel	04.05 -	1005	1015	E10-35-016-01-22	A, 18, 20			30	30					F11-55-008-02-VA	F11-35-016-01-HA	ABE
1.6 TDCi, 1.8 TDCi, 2.0, 2.0 TDCi	04.05 -	1070	1015	E10-35-016-02-22	A, 18, 20			30	30					F11-35-014-02-VA	F11-35-016-01-HA	ABE
B12 Pro-Kit (Performance Komplettfahrwerke | *Performance Springs+Shocks*)																
1.4, 1.6, 1.6 Ti, 1.8, 1.8 Flexifuel	04.05 -	1005	1015	E90-35-016-01-22	A, 18, 20, 78, 161			30	30					F11-55-008-02-VA	F11-35-016-01-HA	ABE
1.6 TDCi, 1.8 TDCi, 2.0, 2.0 TDCi	04.05 -	1070	1015	E90-35-016-02-22	A, 18, 20, 78, 161			30	30					F11-35-014-02-VA	F11-35-016-01-HA	ABE
Pro-Street-S (Gewindefahrwerke - höhenverstellbar | *Coil-Overs-Adjustable Ride Hight*)																
1.4, 1.6, 1.6 TDCi, 1.6 Ti, 1.8, 1.8 Flexifuel, 1.8 TDCi, 2.0, 2.0 TDCi	04.05 -	1070	1015	PSS65-35-016-01-22	A, 18, 20, 23, 25, 45, 160			35-65	35-65							T
FOCUS III																
Pro-Kit (Performance Fahrwerksfedern | *Performance Springs*)																
1.0 EcoBoost, 1.6 EcoBoost, 1.6 Flexifuel, 1.6 TDCi, 1.6 TDCi ECOnetic, 1.6 Ti	04.11 -	985	1025	E10-35-023-01-22	A, 18, 20		12	25	25					F11-35-023-01-VA	F11-35-014-01-HA	T
1.6 Ti, 1.6 Flexifuel, 1.6 Ecoboost, 2.0, 2.0 Flex, 2.0 Ti-GDi, 2.0 TDCi	04.11 -	1100	1025	E10-35-023-02-22	A, 18, 20		12	25	25					F11-84-006-07-VA	F11-35-014-01-HA	T
2.0 ST	07.12 -	1100	1025	E10-35-023-02-22	A, 18, 20		12	25	10					F11-84-006-07-VA	F11-35-014-01-HA	T
1.0 EcoBoost, 1.5 Ecoboost, 1.6 Ti, 1.5 TDCi, 1.5 TDCi ECOnetic, 1.6 TDCi, 1.6 TDCi ECOnetic	09.14 -	985	1025	E10-35-023-07-22	A, 18, 20	13		25	25					F11-35-023-07-FA	F11-35-014-01-HA	T
1.5 Ecoboost, 1.6 Ti, 2.0, 1.5 TDCi, 1.5 TDCi ECOnetic, 1.6 TDCi, 1.6 TDCi ECOnetic, 2.0 TDCi	09.14 -	1100	1025	E10-35-023-08-22	A, 18, 20	13		25	25					F11-35-023-08-FA	F11-35-014-01-HA	T
2.0 ST	09.14 -	1100	1025	E10-35-023-08-22	A, 18, 20	13		25	10					F11-35-023-08-FA	F11-35-014-01-HA	T
B12 Pro-Kit (Performance Komplettfahrwerke | *Performance Springs+Shocks*)																
1.0 EcoBoost, 1.5 Ecoboost, 1.6 Ti, 1.6 Flexifuel, 1.6 Ecoboost, 1.6 TDCi, 1.6 TDCi ECOnetic	04.11 -	985	1025	E90-35-023-01-22	A, 18, 20, 78, 161		12	25	25					F11-35-023-01-VA	F11-35-014-01-HA	T
1.6 Ti, 1.6 Flexifuel, 1.6 Ecoboost, 2.0, 2.0 Flex, 2.0 Ti-GDi, 2.0 TDCi	04.11 -	1100	1025	E90-35-023-02-22	A, 18, 20, 78, 161		12	25	25					F11-84-006-07-VA	F11-35-014-01-HA	T
2.0 ST	07.12 -	1100	1025	E90-35-023-05-22	A, 18, 20, 78, 161		12	25	10					F11-84-006-07-VA	F11-35-014-01-HA	T
1.0 EcoBoost, 1.5 Ecoboost, 1.6 Ti, 1.5 TDCi, 1.5 TDCi ECOnetic, 1.6 TDCi, 1.6 TDCi ECOnetic	09.14 -	985	1025	E90-35-023-07-22	A, 18, 20	13		25	25					F11-35-023-07-FA	F11-35-014-01-HA	T
1.5 Ecoboost, 2.0, 1.5 TDCi, 1.5 TDCi ECOnetic, 1.6 TDCi, 1.6 TDCi ECOnetic, 2.0 TDCi	09.14 -	1100	1025	E90-35-023-08-22	A, 18, 20	13		25	25					F11-35-023-08-FA	F11-35-014-01-HA	T
2.0 ST	09.14 -	1100	1025	E90-35-023-08-22	A, 18, 20	13		25	10					F11-35-023-08-FA	F11-35-014-01-HA	T
Pro-Street-S (Gewindefahrwerke - höhenverstellbar | *Coil-Overs-Adjustable Ride Hight*)																
1.6 EcoBoost, 1.6 Flexifuel, 1.6 TDCi, 1.6 Ti	04.11 -	1000	1025	PSS65-35-023-01-22	A, 18, 20, 24, 45			30-50	40-55							T
1.5 Ecoboost, 1.6 Ti, 1.6 Flexifuel, 1.6 Ecoboost, 2.0, 2.0 Flex, 2.0 Ti-GDi, 1.5 TDCi, 1.5 TDCi ECOnetic, 1.6 TDCi, 1.6 TDCi ECOnetic, 2.0 TDCi	04.11 -	1100	1025	PSS65-35-023-02-22	A, 18, 20, 24, 45			30-50	40-55							T
FOCUS III Stufenheck ***FOCUS III Saloon***																
Pro-Kit (Performance Fahrwerksfedern | *Performance Springs*)																
1.0 EcoBoost, 1.6 EcoBoost, 1.6 Flexifuel, 1.6 TDCi, 1.6 Ti	04.11 -	985	1025	E10-35-023-01-22	A, 18, 20		12	25	25					F11-35-023-01-VA	F11-35-014-01-HA	T
1.6 Ti, 1.6 Flexifuel, 1.6 Ecoboost, 2.0 Flex, 2.0 GDi, 2.0 TDCi	04.11 -	1100	1025	E10-35-023-02-22	A, 18, 20		12	25	25					F11-84-006-07-VA	F11-35-014-01-HA	T
1.0 EcoBoost, 1.5 Ecoboost, 1.6 Ti, 1.5 TDCi, 1.5 TDCi ECOnetic, 1.6 TDCi, 1.6 TDCi ECOnetic	09.14 -	985	1025	E10-35-023-07-22	A, 18, 20	13		25	25					F11-35-023-07-FA	F11-35-014-01-HA	T
1.5 Ecoboost, 2.0, 1.5 TDCi, 1.5 TDCi ECOnetic, 1.6 TDCi, 1.6 TDCi ECOnetic, 2.0 TDCi	09.14 -	1100	1025	E10-35-023-08-22	A, 18, 20	13		25	25					F11-35-023-08-FA	F11-35-014-01-HA	T
B12 Pro-Kit (Performance Komplettfahrwerke | *Performance Springs+Shocks*)																
1.0 EcoBoost, 1.6 EcoBoost, 1.6 Flexifuel, 1.6 TDCi, 1.6 Ti	04.11 -	985	1025	E90-35-023-01-22	A, 18, 20, 78, 161		12	25	25					F11-35-023-01-VA	F11-35-014-01-HA	T
1.6 Ti, 1.6 Flexifuel, 1.6 Ecoboost, 2.0 Flex, 2.0 GDi, 2.0 TDCi	04.11 -	1100	1025	E90-35-023-02-22	A, 18, 20, 78, 161		12	25	25					F11-84-006-07-VA	F11-35-014-01-HA	T
1.0 EcoBoost, 1.5 Ecoboost, 1.6 Ti, 1.5 TDCi, 1.5 TDCi ECOnetic, 1.6 TDCi, 1.6 TDCi ECOnetic1.6 TDCi ECOnetic	09.14 -	985	1025	E90-35-023-07-22	A, 18, 20	13		25	25					F11-35-023-07-FA	F11-35-014-01-HA	T
1.5 Ecoboost, 2.0, 1.5 TDCi, 1.5 TDCi ECOnetic, 1.6 TDCi, 1.6 TDCi ECOnetic, 2.0 TDCi	09.14 -	1100	1025	E90-35-023-08-22	A, 18, 20	13		25	25					F11-35-023-08-FA	F11-35-014-01-HA	T
Pro-Street-S (Gewindefahrwerke - höhenverstellbar | *Coil-Overs-Adjustable Ride Hight*)																
1.6 EcoBoost, 1.6 Flexifuel, 1.6 TDCi, 1.6 Ti	04.11 -	1000	1025	PSS65-35-023-01-22	A, 18, 20, 24, 45			30-50	40-55							T
1.6 Ti, 1.6 Flexifuel, 1.6 Ecoboost, 2.0, 2.0 Flex, 2.0 GDi, 2.0 TDCi	04.11 -	1100	1025	PSS65-35-023-02-22	A, 18, 20, 24, 45			30-50	40-55							T
FOCUS III Turnier																
Pro-Kit (Performance Fahrwerksfedern | *Performance Springs*)																
1.0 EcoBoost, 1.6 EcoBoost, 1.6 Flexifuel, 1.6 TDCi, 1.6 TDCi ECOnetic, 1.6 Ti	05.11 -	985	1070	E10-35-023-03-22	A, 18, 20, 68		12	25	25					F11-35-023-01-VA	F11-35-023-03-HA	T
1.6 EcoBoost, 1.6 Flexifuel, 1.6 TDCi, 1.6 TDCi ECOnetic, 1.6 Ti, 2.0, 2.0 TDCi	05.11 -	1100	1070	E10-35-023-04-22	A, 18, 20, 68		12	25	25					F11-84-006-07-VA	F11-35-023-03-HA	T
2.0 ST	05.11 -	1100	1070	E10-35-023-06-22	A, 18, 20, 68		12	20	20					F11-84-006-07-VA	F11-35-023-11-RA	T
1.0 EcoBoost, 1.5 Ecoboost, 1.6 Ti, 1.5 TDCi, 1.5 TDCi ECOnetic, 1.6 TDCi, 1.6 TDCi ECOnetic	09.14 -	985	1070	E10-35-023-09-22	A, 18, 20	13		25	25					F11-35-023-07-FA	F11-35-023-03-HA	T
1.5 Ecoboost, 2.0, 1.5 TDCi, 1.5 TDCi ECOnetic, 1.6 TDCi, 1.6 TDCi ECOnetic, 2.0 TDCi	09.14 -	1100	1070	E10-35-023-10-22	A, 18, 20	13		25	25					F11-35-023-08-FA	F11-35-023-03-HA	T
2.0 ST, 2.0 TDCI ST	09.14 -	1100	1070	E10-35-023-11-22	A, 18, 20	13		15	20					F11-35-023-08-FA	F11-35-023-11-RA	T

FORD

Modell *Model*	Baujahr *Year*	Achslast Vorne kg *Front Axle Load kg*	Achslast Hinten kg *Rear Axle Load kg*	Artikel-Nr. *Part-No.*	Hinweise *Notes*	ab Nachtrag ...xx BE *from suppl. ...xx of type approval*	bis Nachtrag ...xx BE *to suppl. ...xx of type approval*	ca. Tieferl. Vorne mm *ca. Lowering Front mm*	ca. Tieferl. Hinten mm *ca. Lowering Rear mm*	Ø Vorne mm *Ø Front mm*	Ø Hinten mm *Ø Rear mm*	Verstellbarkeit Vorne *Adjustable Front*	Verstellbarkeit Hinten *Adjustable Rear*	Ersatzteilbez. Vorne *Spare Part Marking Front*	Ersatzteilbez. Hinten *Spare Part Marking Rear*	Gutachten *Homologation*
FOCUS III Turnier																
B12 Pro-Kit (Performance Komplettfahrwerke | *Performance Springs+Shocks*)																
1.0 EcoBoost, 1.6 EcoBoost, 1.6 Flexifuel, 1.6 TDCi, 1.6 TDCi ECOnetic, 1.6 Ti	05.11 -	985	1070	E90-35-023-03-22	A, 18, 20, 78, 161		12	25	25					F11-35-023-01-VA	F11-35-023-03-HA	T
1.6 EcoBoost, 1.6 Flexifuel, 1.6 TDCi, 1.6 TDCi ECOnetic, 1.6 Ti, 2.0 TDCi	05.11 -	1100	1070	E90-35-023-04-22	A, 18, 20, 78, 161		12	25	25					F11-84-006-07-VA	F11-35-023-03-HA	T
2.0 ST	05.11 -	1100	1070	E90-35-023-04-22	A, 18, 20, 78, 161		12	25	10					F11-84-006-07-VA	F11-35-023-03-HA	T
1.0 EcoBoost, 1.5 Ecoboost, 1.6 Ti, 1.5 TDCi, 1.5 TDCi ECOnetic, 1.6 TDCi, 1.6 TDCi ECOnetic 1.6 TDCi ECOnetic	09.14 -	985	1070	E90-35-023-09-22	A, 18, 20	13		25	25					F11-35-023-07-FA	F11-35-023-03-HA	T
1.5 Ecoboost, 2.0, 1.5 TDCi, 1.5 TDCi ECOnetic, 1.6 TDCi, 1.6 TDCi ECOnetic, 2.0 TDCiTDCi	09.14 -	1100	1070	E90-35-023-10-22	A, 18, 20	13		25	25					F11-35-023-08-FA	F11-35-023-03-HA	T
2.0 ST, 2.0 TDCI ST	09.14 -	1100	1070	E90-35-023-11-22	A, 18, 20	13		15	20					F11-35-023-08-FA	F11-35-023-11-RA	T
FOCUS III Van																
Pro-Kit (Performance Fahrwerksfedern | *Performance Springs*)																
1.0 EcoBoost	04.11 -	985	1025	E10-35-023-01-22	A, 18, 20		12	25	25					F11-35-023-01-VA	F11-35-014-01-HA	T
1.0 EcoBoost, 1.5 Ecoboost, 1.5 TDCi, 1.5 TDCi ECOnetic	09.14 -	985	1025	E10-35-023-07-22	A, 18, 20	13		25	25					F11-35-023-07-FA	F11-35-014-01-HA	T
1.5 Ecoboost, 1.5 TDCi, 1.5 TDCi ECOnetic, 2.0 TDCi	09.14 -	1100	1025	E10-35-023-08-22	A, 18, 20	13		25	25					F11-35-023-08-FA	F11-35-014-01-HA	T
B12 Pro-Kit (Performance Komplettfahrwerke | *Performance Springs+Shocks*)																
1.0 EcoBoost	04.11 -	985	1025	E90-35-023-01-22	A, 18, 20, 78, 161		12	25	25					F11-35-023-01-VA	F11-35-014-01-HA	T
1.0 EcoBoost, 1.5 Ecoboost, 1.5 TDCi, 1.5 TDCi ECOnetic	09.14 -	985	1025	E90-35-023-07-22	A, 18, 20	13		25	25					F11-35-023-07-FA	F11-35-014-01-HA	T
1.5 Ecoboost, 1.5 TDCi, 1.5 TDCi ECOnetic, 2.0 TDCi	09.14 -	1100	1025	E90-35-023-08-22	A, 18, 20	13		25	25					F11-35-023-08-FA	F11-35-014-01-HA	T
Pro-Street-S (Gewindefahrwerke - höhenverstellbar | *Coil-Overs-Adjustable Ride Hight*)																
1.0 EcoBoost, 1.5 Ecoboost	04.11 -	1000	1025	PSS65-35-023-01-22	A, 18, 20, 24, 45			30-50	40-55							T
1.5 Ecoboost, 2.0 TDCi	04.11 -	1100	1025	PSS65-35-023-02-22	A, 18, 20, 24, 45			30-50	40-55							T
FOCUS Kombi (DNW) ***FOCUS Estate (DNW)***																
Pro-Kit (Performance Fahrwerksfedern | *Performance Springs*)																
1.4 16V, 1.6 16V, 1.6 16V Flexifuel	02.99 - 11.04	855	1010	E3590-140	A, 18, 20			30	30					F3587001	F3590002	ABE
1.8 16V, 2.0 16V, ST170	02.99 - 11.04	915	1010	E3591-140	A, 18, 20			30	30					F3588001	F3590002	ABE
1.8 DI / TDDi, 1.8 TDCi, 1.8 Turbo DI / TDDi	02.99 - 11.04	965	1010	E3593-140	A, 18, 20			30	30					F3590001	F3590002	ABE
Anti-Roll-Kit (Performance Stabilisatoren | *Performance Sway Bars*)																
1.4 16V, 1.6 16V, 1.6 16V Flexifuel, 1.8 16V, 1.8 DI / TDDi, 1.8 Turbo DI / TDDi, 2.0 16V	02.99 - 11.04			E40-35-001-01-11	A, 18, 20, 22, 45					23	26	nicht verstellbar *not adjustable*	nicht verstellbar *not adjustable*	AS41-35-001-01-VA	AS41-35-001-01-HA	T
B12 Pro-Kit (Performance Komplettfahrwerke | *Performance Springs+Shocks*)																
1.4 16V, 1.6 16V, 1.6 16V Flexifuel	02.99 - 11.04	855	1010	E90-35-001-03-22	A, 18, 20, 78, 161			30	30					F3587001	F3590002	T
1.8 16V, 2.0 16V, ST170	02.99 - 11.04	915	1010	E90-35-001-04-22	A, 18, 20, 78, 161			30	30					F3588001	F3590002	T
1.8 DI / TDDi, 1.8 TDCi, 1.8 Turbo DI / TDDi	02.99 - 11.04	965	1010	E90-35-001-06-22	A, 18, 20, 78, 161			30	30					F3590001	F3590002	T
FOCUS Stufenheck (DFW) ***FOCUS Saloon (DFW)***																
Pro-Kit (Performance Fahrwerksfedern | *Performance Springs*)																
1.4 16V, 1.6 16V	02.99 - 11.04	855	905	E3587-140	A, 18, 20			30	30					F3587001	F3587002	ABE
1.8 16V, 2.0 16V	02.99 - 11.04	915	905	E3588-140	A, 18, 20			30	30					F3588001	F3587002	ABE
1.8 TDCi, 1.8 Turbo DI / TDDi	02.99 - 03.05	965	905	E3592-140	A, 18, 20			30	30					F3590001	F3587002	ABE
Anti-Roll-Kit (Performance Stabilisatoren | *Performance Sway Bars*)																
1.4 16V, 1.6 16V, 1.8 16V, 1.8 TDCi, 1.8 Turbo DI / TDDi, 2.0 16V	02.99 - 03.05			E40-35-001-01-11	A, 18, 20, 22, 45					23	26	nicht verstellbar *not adjustable*	nicht verstellbar *not adjustable*	AS41-35-001-01-VA	AS41-35-001-01-HA	T
B12 Pro-Kit (Performance Komplettfahrwerke | *Performance Springs+Shocks*)																
1.4 16V, 1.6 16V	02.99 - 11.04	855	905	E90-35-001-01-22	A, 18, 20, 78, 161			30	30					F3587001	F3587002	ABE
1.8 16V, 2.0 16V	02.99 - 11.04	915	905	E90-35-001-02-22	A, 18, 20, 78, 161			30	30					F3588001	F3587002	ABE
1.8 TDCi, 1.8 Turbo DI / TDDi	02.99 - 11.04	965	905	E90-35-001-05-22	A, 18, 20, 78, 161			30	30					F3590001	F3587002	ABE
GALAXY (WGR)																
Pro-Kit (Performance Fahrwerksfedern | *Performance Springs*)																
2.0 i, 2.3 16V	11.95 - 05.06	1240	1355	E3566-140	A, 18, 20			30	30					F8549001	F8549002	T
1.9 TDI, 2.8 V6, 2.8 i V6	03.95 - 05.06	1260	1355	E3574-140	A, 18, 20			30	30					F8552001	F8549002	T
B12 Pro-Kit (Performance Komplettfahrwerke | *Performance Springs+Shocks*)																
2.0 i, 2.3 16V	11.95 - 05.06	1240	1355	E90-35-025-01-22	A, 18, 20, 78, 161			30	30					F8549001	F8549002	T
1.9 TDI, 2.8 V6, 2.8 i V6	03.95 - 05.06	1260	1355	E90-35-025-02-22	A, 18, 20, 78, 161			30	30					F8552001	F8549002	T
GALAXY																
Pro-Kit (Performance Fahrwerksfedern | *Performance Springs*)																
1.6 EcoBoost, 2.0, 2.0 EcoBoost, 2.0 Flexifuel, 2.3	05.06 -	1300	1405	E10-35-018-01-22	A, 18, 20			30	25					F11-35-017-01-VA	F11-35-017-01-HA	ABE
1.6 TDCi, 1.8 TDCi, 2.0 TDCi, 2.2 TDCi	05.06 -	1300	1405	E10-35-018-02-22	A, 18, 20			30	25					F11-35-017-02-VA	F11-35-017-01-HA	ABE
B12 Pro-Kit (Performance Komplettfahrwerke | *Performance Springs+Shocks*)																
1.6 EcoBoost, 2.0, 2.0 EcoBoost, 2.0 Flexifuel, 2.3	05.06 -	1300	1405	E90-35-018-01-22	A, 18, 20, 78, 161			30	25					F11-35-017-01-VA	F11-35-017-01-HA	ABE
1.6 TDCi, 1.8 TDCi, 2.0 TDCi, 2.2 TDCi	05.06 -	1300	1405	E90-35-018-02-22	A, 18, 20, 78, 161			30	25					F11-35-017-02-VA	F11-35-017-01-HA	ABE

FORD

Modell *Model*	Baujahr *Year*	Achslast Vorne kg *Front Axle Load kg*	Achslast Hinten kg *Rear Axle Load kg*	Artikel-Nr. *Part-No.*	Hinweise *Notes*	ab Nachtrag ...xx BE *from suppl. ...xx of type approval*	bis Nachtrag ...xx BE *to suppl. ...xx of type approval*	ca. Tieferl. Vorne mm *ca. Lowering Front mm*	ca. Tieferl. Hinten mm *ca. Lowering Rear mm*	Ø Vorne mm *Ø Front mm*	Ø Hinten mm *Ø Rear mm*	Verstellbarkeit Vorne *Adjustable Front*	Verstellbarkeit Hinten *Adjustable Rear*	Ersatzteilbez. Vorne *Spare Part Marking Front*	Ersatzteilbez. Hinten *Spare Part Marking Rear*	Gutachten *Homologation*
GRAND C-MAX																
Pro-Kit (Performance Fahrwerksfedern | *Performance Springs*)																
1.6 Ti, 1.5 EcoBoost, 1.6 EcoBoost	12.10 -	995	1250	E10-35-024-04-22	A, 18, 20, 68			25	25					F11-35-023-01-VA	F11-84-010-01-HA	T
1.6 Ti, 1.5 EcoBoost, 1.6 EcoBoost, 1.5 TDCI, 1.6 TDCI	12.10 -	1055	1250	E10-35-024-05-22	A, 18, 20, 68			25	25					F11-84-006-07-VA	F11-84-010-01-HA	T
2.0 TDCi	12.10 -	1175	1250	E10-35-024-06-22	A, 18, 20, 68			25	25					F11-35-014-02-VA	F11-84-010-01-HA	T
GRAND C-MAX Van																
Pro-Kit (Performance Fahrwerksfedern | *Performance Springs*)																
1.5 EcoBoost, 1.6 EcoBoost	12.10 -	995	1250	E10-35-024-04-22	A, 18, 20, 68			25	25					F11-35-023-01-VA	F11-84-010-01-HA	T
1.5 EcoBoost, 1.6 EcoBoost, 1.5 TDCI, 1.6 TDCI	12.10 -	1055	1250	E10-35-024-05-22	A, 18, 20, 68			25	25					F11-84-006-07-VA	F11-84-010-01-HA	T
2.0 TDCi	12.10 -	1175	1250	E10-35-024-06-22	A, 18, 20, 68			25	25					F11-35-014-02-VA	F11-84-010-01-HA	T
KA (RB_)																
Pro-Kit (Performance Fahrwerksfedern | *Performance Springs*)																
1.0 i, 1.3 i, 1.6 i	09.96 - 11.08	760	610	E10-35-003-01-22	A, 18, 20			30	30					F3569001	F11-35-003-01-HA	ABE
KA																
Pro-Kit (Performance Fahrwerksfedern | *Performance Springs*)																
1.2	10.08 -	770	640	E10-35-022-01-22	A, 18, 20			25	25					F11-35-022-01-VA	F11-35-022-01-HA	T
1.3 TDCi	10.08 -	830	640	E10-35-022-02-22	A, 18, 20			25	25					F11-35-022-02-VA	F11-35-022-01-HA	T
KUGA I																
Pro-Kit (Performance Fahrwerksfedern | *Performance Springs*)																
2.0 TDCi, 2.0 TDCi 4x4, 2.5, 2.5 4x4	03.08 -	1210	1150	E10-35-021-01-22	A, 18			30	30					F11-35-021-01-VA	F11-35-021-01-HA	T
KUGA II (DM2)																
Pro-Kit (Performance Fahrwerksfedern | *Performance Springs*)																
1.5 Ecoboost, 1.6 EcoBoost, 2.0, 2.5, 2.0 TDCi	01.13 -			E10-35-021-04-22	A, 18			30	30-40					F11-35-021-04-FA	F11-35-021-01-HA	
1.5 Ecoboost 4x4, 1.6 Ecoboost 4x4, 1.6 4x4, 2.0 4x4, 2.5 4x4, 2.0 TDCi 4x4	01.13 -			E10-35-021-05-22	A, 18			30	30-40					F11-35-021-05-FA	F11-35-021-01-HA	
KUGA II Van																
Pro-Kit (Performance Fahrwerksfedern | *Performance Springs*)																
1.5 Ecoboost, 2.0 TDCi	09.14 -			E10-35-021-04-22	A, 18			30	30-40					F11-35-021-04-FA	F11-35-021-01-HA	T
1.5 Ecoboost 4x4, 2.0 TDCi 4x4	09.14 -			E10-35-021-05-22	A, 18			30	30-40					F11-35-021-05-FA	F11-35-021-01-HA	T
MONDEO III (B5Y)																
Pro-Kit (Performance Fahrwerksfedern | *Performance Springs*)																
1.8 16V, 1.8 SCi, 2.0 16V	11.00 - 08.07	1065	1015	E10-35-004-01-22	A, 18, 20			40	30					F11-35-004-01-VA	F11-35-004-01-HA	ABE
1.8 16V, 1.8 SCi, 2.0 16V, 2.0 16V DI / TDDi / TDCi, 2.0 16V TDDi / TDCi, 2.0 TDCi, 2.2 TDCi, 2.5 V6 24V, 3.0 V6 24V	11.00 - 08.07	1200	1015	E10-35-004-02-22	A, 18, 20			40	30					F11-35-004-02-VA	F11-35-004-01-HA	ABE
MONDEO III Kombi (BWY)																
MONDEO III Estate (BWY)																
Pro-Kit (Performance Fahrwerksfedern | *Performance Springs*)																
1.8 16V, 1.8 SCi, 2.0 16V	11.00 - 08.07	1065	1140	E10-35-004-03-22	A, 18, 20			40	30					F11-35-004-01-VA	F11-35-004-03-HA	ABE
1.8 16V, 1.8 SCi, 2.0 16V, 2.0 16V DI / TDDi / TDCi, 2.0 16V TDDi / TDCi, 2.0 TDCi, 2.2 TDCi, 2.5 V6 24V, 3.0 V6 24V	11.00 - 08.07	1200	1140	E10-35-004-04-22	A, 18, 20			40	30					F11-35-004-02-VA	F11-35-004-03-HA	ABE
B12 Pro-Kit (Performance Komplettfahrwerke | *Performance Springs+Shocks*)																
1.8 16V, 1.8 SCi, 2.0 16V	11.00 - 08.07	1065	1140	E90-35-004-03-22	A, 18, 20, 78, 161			40	30					F11-35-004-01-VA	F11-35-004-03-HA	ABE
1.8 16V, 1.8 SCi, 2.0 16V, 2.0 16V DI / TDDi / TDCi, 2.0 16V TDDi / TDCi, 2.0 TDCi, 2.2 TDCi, 2.5 V6 24V, 3.0 V6 24V	11.00 - 08.07	1200	1140	E90-35-004-04-22	A, 18, 20, 78, 161			40	30					F11-35-004-02-VA	F11-35-004-03-HA	ABE
MONDEO III Stufenheck (B4Y)																
MONDEO III Saloon (B4Y)																
Pro-Kit (Performance Fahrwerksfedern | *Performance Springs*)																
1.8 16V, 1.8 SCi, 2.0 16V	11.00 - 08.07	1065	1015	E10-35-004-01-22	A, 18, 20			40	30					F11-35-004-01-VA	F11-35-004-01-HA	ABE
1.8 16V, 1.8 SCi, 2.0 16V, 2.0 16V DI / TDDi / TDCi, 2.0 16V TDDi / TDCi, 2.0 TDCi, 2.2 TDCi, 2.5 V6 24V, 3.0 V6 24V	11.00 - 08.07	1200	1015	E10-35-004-02-22	A, 18, 20			40	30					F11-35-004-02-VA	F11-35-004-01-HA	ABE
MONDEO IV																
Pro-Kit (Performance Fahrwerksfedern | *Performance Springs*)																
1.6 EcoBoost, 1.6 Ti, 2.0, 2.0 EcoBoost, 2.0 Flexifuel, 2.0 SCTi	03.07 -	1130	1115	E10-35-019-01-22	A, 18, 20			30	30					F11-35-019-01-VA	F11-84-010-01-HA	T
1.6 TDCi, 1.8 TDCi, 2.0 TDCi, 2.2 TDCi, 2.3, 2.5	03.07 -	1215	1115	E10-35-019-02-22	A, 18, 20			30	30					F11-35-019-02-VA	F11-84-010-01-HA	T
B12 Pro-Kit (Performance Komplettfahrwerke | *Performance Springs+Shocks*)																
1.6 EcoBoost, 1.6 Ti, 2.0, 2.0 EcoBoost, 2.0 Flexifuel, 2.0 SCTi	03.07 -	1130	1115	E90-35-019-01-22	A, 18, 20, 78, 161			30	30					F11-35-019-01-VA	F11-84-010-01-HA	T
1.6 TDCi, 1.8 TDCi, 2.0 TDCi, 2.2 TDCi, 2.3, 2.5	03.07 -	1215	1115	E90-35-019-02-22	A, 18, 20, 78, 161			30	30					F11-35-019-02-VA	F11-84-010-01-HA	T
MONDEO IV Stufenheck																
MONDEO IV Saloon																
Pro-Kit (Performance Fahrwerksfedern | *Performance Springs*)																
1.6 Ti, 2.0, 2.0 Flexifuel	03.07 -	1130	1115	E10-35-019-01-22	A, 18, 20			30	30					F11-35-019-01-VA	F11-84-010-01-HA	T
2.3, 2.5, 1.6 TDCi, 1.8 TDCi, 2.0 TDCi, 2.2 TDCi	03.07 -	1215	1115	E10-35-019-02-22	A, 18, 20			30	30					F11-35-019-02-VA	F11-84-010-01-HA	T
B12 Pro-Kit (Performance Komplettfahrwerke | *Performance Springs+Shocks*)																
1.6 Ti, 2.0, 2.0 Flexifuel	03.07 -	1130	1115	E90-35-019-01-22	A, 18, 20, 78, 161			30	30					F11-35-019-01-VA	F11-84-010-01-HA	T
2.3, 2.5, 1.6 TDCi, 1.8 TDCi, 2.0 TDCi, 2.2 TDCi	03.07 -	1215	1115	E90-35-019-02-22	A, 18, 20, 78, 161			30	30					F11-35-019-02-VA	F11-84-010-01-HA	T
MONDEO IV Turnier																
Pro-Kit (Performance Fahrwerksfedern | *Performance Springs*)																
1.6 EcoBoost, 1.6 Ti, 2.0, 2.0 EcoBoost, 2.0 Flexifuel, 2.0 SCTi	03.07 -	1130	1220	E10-35-019-03-22	A, 18, 20			30	25-30					F11-35-019-01-VA	F11-35-019-03-HA	T
2.0, 2.0 SCTi, 2.0 Flexifuel, 2.0 EcoBoost, 2.3, 2.5, 1.6 TDCi, 1.8 TDCi, 2.0 TDCi, 2.2 TDCi	03.07 -	1215	1220	E10-35-019-04-22	A, 18, 20			30	25-30					F11-35-019-02-VA	F11-35-019-03-HA	T

FORD

Modell *Model*	Baujahr *Year*	Achslast Vorne kg *Front Axle Load kg*	Achslast Hinten kg *Rear Axle Load kg*	Artikel-Nr. *Part-No.*	Hinweise *Notes*	ab Nachtrag ...xx BE *from suppl. ...xx of type approval*	bis Nachtrag ...xx BE *to suppl. ...xx of type approval*	ca. Tieferl. Vorne mm *ca. Lowering Front mm*	ca. Tieferl. Hinten mm *ca. Lowering Rear mm*	Ø Vorne mm *Ø Front mm*	Ø Hinten mm *Ø Rear mm*	Verstellbarkeit Vorne *Adjustable Front*	Verstellbarkeit Hinten *Adjustable Rear*	Ersatzteilbez. Vorne *Spare Part Marking Front*	Ersatzteilbez. Hinten *Spare Part Marking Rear*	Gutachten *Homologation*
MONDEO IV Turnier																
B12 Pro-Kit (Performance Komplettfahrwerke | *Performance Springs+Shocks*)																
1.6 EcoBoost, 1.6 Ti, 2.0, 2.0 EcoBoost, 2.0 Flexifuel, 2.0 SCTi	03.07 -	1130	1220	E90-35-019-03-22	A, 18, 20, 78, 161			30	30					F11-35-019-01-VA	F11-35-019-03-HA	T
2.0 EcoBoost, 2.3, 2.5, 1.6 TDCi, 1.8 TDCi, 2.0 TDCi, 2.2 TDCi	03.07 -	1215	1220	E90-35-019-04-22	A, 18, 20, 78, 161			30	30					F11-35-019-02-VA	F11-35-019-03-HA	T
MONDEO V Stufenheck ***MONDEO V Saloon***																
Pro-Kit (Performance Fahrwerksfedern | *Performance Springs*)																
1.5, 1.6, 2.0 EcoBoost	01.13 -	1130	1115	E10-35-030-02-22	A, 18, 20	26		30	25					F11-35-030-02-FA	F11-35-030-02-RA	
2.0 EcoBoost, 2.5, 2.0 TDCi	01.13 -	1205	1115	E10-35-030-03-22	A, 18, 20	26		30	25					F11-35-030-03-FA	F11-35-030-02-RA	
MONDEO V Schrägheck ***MONDEO V Hatchback***																
Pro-Kit (Performance Fahrwerksfedern | *Performance Springs*)																
1.5, 1.6, 2.0 EcoBoost	09.14 -	1130	1115	E10-35-030-02-22	A, 18, 20	26		30	25					F11-35-030-02-FA	F11-35-030-02-RA	
2.0 EcoBoost, 2.5, 2.0 TDCi	09.14 -	1205	1115	E10-35-030-03-22	A, 18, 20	26		30	25					F11-35-030-03-FA	F11-35-030-02-RA	
MONDEO V Turnier																
Pro-Kit (Performance Fahrwerksfedern | *Performance Springs*)																
1.0 EcoBoost, 1.5 EcoBoost, 2.0 EcoBoost, 1.5 TDCi, 1.6 TDCi	09.14 -	1130	1185	E10-35-030-04-22	A, 18, 20	26		30	25					F11-35-030-02-FA	F11-35-030-04-RA	
2.0 EcoBoost, 2.0 TDCi, 2.0 TDCi Bi-Turbo	09.14 -	1205	1185	E10-35-030-05-22	A, 18, 20	26		30	25					F11-35-030-03-FA	F11-35-030-04-RA	T
MUSTANG																
Pro-Kit (Performance Fahrwerksfedern | *Performance Springs*)																
4.0 V6, 4.6 V8, 5.4 V8	12.04 -	1070	1116	E10-35-008-01-22	A, 10, 18, 20, 69			25	30					F11-35-008-01-VA	F11-35-008-01-HA	T
5.0 V8	07.15 -	1055	1107	E10-35-029-03-22	A, 18, 20, 69			25	20					F11-35-029-03-FA	F11-35-029-01-RA	T
B12 Pro-Kit (Performance Komplettfahrwerke | *Performance Springs+Shocks*)																
4.0 V6, 4.6 V8, 5.4 V8	12.04 - 12.09	1070	1116	E90-35-008-01-22	A, 18, 20, 69, 78, 161			25	30					F11-35-008-01-VA	F11-35-008-01-HA	T
4.0 V6, 4.6 V8, 5.4 V8	01.10 -	1070	1116	E90-35-008-02-22	A, 18, 20, 69, 161			25	30					F11-35-008-01-VA	F11-35-008-01-HA	T
MUSTANG Cabriolet ***MUSTANG Convertible***																
Pro-Kit (Performance Fahrwerksfedern | *Performance Springs*)																
4.0 V6, 4.6 V8, 5.4 V8	12.05 -	1070	1116	E10-35-008-01-22	A, 10, 18, 20, 69			25	30					F11-35-008-01-VA	F11-35-008-01-HA	T
5.0 V8	02.14 -	1075	1148	E10-35-029-03-22	A, 18, 20, 69			25	20					F11-35-029-03-FA	F11-35-029-01-RA	T
Anti-Roll-Kit (Performance Stabilisatoren | *Performance Sway Bars*)																
5.0 V8	02.14 -			E35145-320	A, 18, 20, 22, 45					35	24,5	3-fach verstellbar *3-way adjustable*	3-fach verstellbar *3-way adjustable*	AS35145-320-FA	AS35145-320-RA	T
B12 Pro-Kit (Performance Komplettfahrwerke | *Performance Springs+Shocks*)																
4.0 V6, 4.6 V8, 5.4 V8	01.10 -	1070	1116	E90-35-008-02-22	A, 18, 20, 69, 161									F11-35-008-01-VA	F11-35-008-01-HA	T
4.0 V6, 4.6 V8, 5.4 V8	12.05 - 12.09	1070	1116	E90-35-008-01-22	A, 18, 20, 69, 78, 161			25	30					F11-35-008-01-VA	F11-35-008-01-HA	T
MUSTANG Coupe																
Pro-Kit (Performance Fahrwerksfedern | *Performance Springs*)																
5.0 V8	02.14 -	1075	1148	E10-35-029-03-22	A, 18, 20, 69			25	20					F11-35-029-013-FA	F11-35-029-01-RA	T
Anti-Roll-Kit (Performance Stabilisatoren | *Performance Sway Bars*)																
5.0 V8	02.14 -			E35145-320	A, 18, 20, 22, 45					35	24,5	3-fach verstellbar *3-way adjustable*	3-fach verstellbar *3-way adjustable*	AS35145-320-FA	AS35145-320-RA	T
S-MAX																
Pro-Kit (Performance Fahrwerksfedern | *Performance Springs*)																
1.6 EcoBoost, 2.0, 2.0 EcoBoost, 2.0 Flexifuel, 2.3	05.06 -	1300	1405	E10-35-017-01-22	A, 18, 20			30	25					F11-35-017-01-VA	F11-35-017-01-HA	ABE
1.6 TDCi, 1.8 TDCi, 2.0 TDCi, 2.2 TDCi, 2.5 ST	05.06 -	1300	1405	E10-35-017-02-22	A, 18, 20			30	25					F11-35-017-02-VA	F11-35-017-01-HA	ABE
B12 Pro-Kit (Performance Komplettfahrwerke | *Performance Springs+Shocks*)																
1.6 EcoBoost, 2.0, 2.0 EcoBoost, 2.0 Flexifuel, 2.3	05.06 -	1300	1405	E90-35-017-01-22	A, 18, 20, 78, 161			30	25					F11-35-017-01-VA	F11-35-017-01-HA	ABE
1.6 TDCi, 1.8 TDCi, 2.0 TDCi, 2.2 TDCi, 2.5 ST	05.06 -	1300	1405	E90-35-017-02-22	A, 18, 20, 78, 161			30	25					F11-35-017-02-VA	F11-35-017-01-HA	ABE
STREET KA																
Pro-Kit (Performance Fahrwerksfedern | *Performance Springs*)																
1.6	05.03 - 07.05	760	610	E10-35-003-01-22	A, 18, 20			30	30					F3569001	F11-35-003-01-HA	ABE
B12 Pro-Kit (Performance Komplettfahrwerke | *Performance Springs+Shocks*)																
1.6	05.03 - 07.05	760	610	E90-35-003-02-22	A, 18, 20, 78, 161			30	30					F3569001	F11-35-003-01-HA	ABE
TOURNEO Connect Kombi																
Pro-Kit (Performance Fahrwerksfedern | *Performance Springs*)																
1.0 EcoBoost, 1.6 EcoBoost, 1.5 TDCi, 1.6 TDCi	09.13 -	1175	1330	E10-35-028-02-22	A, 18, 20, 211			20	25					F11-35-028-01-FA	F11-35-028-02-RA	T

HOLDEN

COMMODORE																
Pro-Kit (Performance Fahrwerksfedern | *Performance Springs*)																
VR - VS V6 3.8 Live axle rear	01.93 - 12.96			E3770-140	A, 10, 210			30	30					F3770001	F3771002	E
VR - VS V6 3.8 IRS	01.93 - 12.96			E3773-140	A, 10, 210			30	30					F3770001	F2042002	E
VR - VS V8 5.0 Live axle rear	01.93 - 12.96			E3771-140	A, 10, 210			30	30					F3770101	F3771002	E
VR - VS V8 5.0 IRS	01.93 - 12.96			E3775-140	A, 10, 210			30	30					F3770101	F2042002	E
VT, VX, VY, V6 3.8, V8 5.7	01.97 -			E3773-140	A, 10, 210			30	30					F3770001	F2042002	E
VE V6, V8, non MRC	08.06 -			E10-37-001-01-22	A, 10, 210			35	35					F11-37-001-01-VA	F11-37-001-02-HA	E

HOLDEN

HOLDEN

HONDA

Modell *Model*	Baujahr *Year*	Achslast Vorne kg *Front Axle Load kg*	Achslast Hinten kg *Rear Axle Load kg*	Artikel-Nr. *Part-No.*	Hinweise *Notes*	ab Nachtrag ...xx BE *from suppl. ...xx of type approval*	bis Nachtrag ...xx BE *to suppl. ...xx of type approval*	ca. Tieferl. Vorne mm *ca. Lowering Front mm*	ca. Tieferl. Hinten mm *ca. Lowering Rear mm*	Ø Vorne mm *Ø Front mm*	Ø Hinten mm *Ø Rear mm*	Verstellbarkeit Vorne *Adjustable Front*	Verstellbarkeit Hinten *Adjustable Rear*	Ersatzteilbez. Vorne *Spare Part Marking Front*	Ersatzteilbez. Hinten *Spare Part Marking Rear*	Gutachten *Homologation*
COMMODORE Ute																
Pro-Kit (Performance Fahrwerksfedern | *Performance Springs*)																
VR - VS V6 3.8	01.93 - 12.00			E3772-140	A, 10, 210			30	30					F3770001	F3770002	E
VR - VS V8 5.0	01.93 - 12.00			E3772-240	A, 10, 210			30	30					F3770101	F3770002	E
VU V6 3.8, VU V8 5.7	01.01 -			E3776-140	A, 10, 210			30	30					F3770001	F2067102	E
VE V6, V8	07.07 -			E10-37-001-04-22	A, 10, 210			35	35					F11-37-001-01-VA	F11-37-001-01-HA	E
GTS (VE)																
Pro-Kit (Performance Fahrwerksfedern | *Performance Springs*)																
6.0 i V8, 6.2 i V8 (non MRC)	08.06 -			E10-37-001-01-22	A, 10, 21, 210			35	35					F11-37-001-01-VA	F11-37-001-02-HA	E
6.0 i V8, 6.2 i V8 (non MRC)	08.06 -			E10-37-001-02-22	A, 10, 210			35	35					F11-37-001-01-VA	F11-37-001-03-HA	E
MALOO (VE)																
Pro-Kit (Performance Fahrwerksfedern | *Performance Springs*)																
6.0 i V8, 6.2 i V8	10.07 -			E10-37-001-04-22	A, 10, 210			35	35					F11-37-001-01-VA	F11-37-001-01-HA	E
MONARO																
Pro-Kit (Performance Fahrwerksfedern | *Performance Springs*)																
CV6	01.01 -			E3773-140	A, 10, 210			30	30					F3770001	F2042002	E
CV8	01.01 -			E3773-140	A, 10, 210			30	30					F3770001	F2042002	E
ACCORD VI (CG, CK)																
Pro-Kit (Performance Fahrwerksfedern | *Performance Springs*)																
1.6 LS, 1.6 i, 1.8 i, 2.0 Turbo DI, 2.0 i, 2.2 Type-R, 2.3	03.97 - 12.03	1040	940	E4040-140	A, 18, 20			30-35	30					F4040001	F4040002	T
B12 Pro-Kit (Performance Komplettfahrwerke | *Performance Springs+Shocks*)																
1.6 LS, 1.6 i, 1.8 i, 2.0 Turbo DI, 2.0 i, 2.2 Type-R	03.97 - 12.03	1040	940	E90-40-018-01-22	A, 18, 20, 78, 161, 166			30-35	30					F4040001	F4040002	T
ACCORD VI Coupe (CG)																
Pro-Kit (Performance Fahrwerksfedern | *Performance Springs*)																
2.0 i 16V, 3.0 V6 24V	12.97 - 06.03	1040	900	E4026-140	A, 18, 20			30-35	30					F4026001	F4026002	T
ACCORD VI Hatchback (CH)																
Pro-Kit (Performance Fahrwerksfedern | *Performance Springs*)																
1.6, 1.8 i, 2.0, 2.0 TDi, 2.3	12.99 - 12.02	1040	940	E4040-140	A, 18, 20			30-35	30					F4040001	F4040002	T
B12 Pro-Kit (Performance Komplettfahrwerke | *Performance Springs+Shocks*)																
1.6, 1.8 i, 2.0, 2.0 TDi, 2.3	12.99 - 12.02	1040	940	E90-40-018-01-22	A, 18, 20, 78, 161, 166			30-35	30					F4040001	F4040002	T
ACCORD VII (CL_, CM_)																
Pro-Kit (Performance Fahrwerksfedern | *Performance Springs*)																
2.0	02.03 -	1050	920	E10-40-008-01-22	A, 18, 20			35-40	30					F11-40-008-01-VA	F11-40-008-01-HA	T
2.4, 2.4 Vtec E, 2.2 i-CTDi	02.03 -	1100	920	E10-40-008-03-22	A, 18, 20			30-35	30					F11-40-008-03-VA	F11-40-008-01-HA	T
B12 Pro-Kit (Performance Komplettfahrwerke | *Performance Springs+Shocks*)																
2.0	02.03 -	1050	920	E90-40-008-01-22	A, 18, 20, 78, 84, 161			35-40	30					F11-40-008-01-VA	F11-40-008-01-HA	T
2.4, 2.4 Vtec E, 2.2 i-CTDi	02.03 -	1100	920	E90-40-008-03-22	A, 18, 20, 78, 84, 161			30-35	30					F11-40-008-03-VA	F11-40-008-01-HA	T
ACCORD VIII (CU)																
Pro-Kit (Performance Fahrwerksfedern | *Performance Springs*)																
2.0 i, 2.4 Schaltgetriebe, 2.4 i Schaltgetriebe *2.0 i, 2.4 i manual transmission, 2.4 manual transmission*	06.08 -	1055	950	E10-40-013-01-22	A, 18, 20			30	30					F11-40-013-01-VA	F11-40-013-01-HA	T
2.2 i-DTEC, 2.4 Automatik, 2.4 i Automatik *2.2 i-DTEC, 2.4 automatic transmission, 2.4 i automatic transmission*	06.08 -	1200	950	E10-40-013-02-22	A, 18, 20			30	30					F11-40-013-02-VA	F11-40-013-01-HA	T
ACCORD VIII Tourer ***ACCORD VIII Estate***																
Pro-Kit (Performance Fahrwerksfedern | *Performance Springs*)																
2.0 i, 2.4 i Schaltgetriebe *2.0 i, 2.4 i manual transmission*	07.08 -	1055	1030	E10-40-013-03-22	A, 18, 20			30	30					F11-40-013-01-VA	F11-40-013-03-HA	T
2.2 i-DTEC, 2.4 i Automatik *2.2 i-DTEC, 2.4 i automatic transmission*	07.08 -	1200	1030	E10-40-013-04-22	A, 18, 20			30	30					F11-40-013-02-VA	F11-40-013-03-HA	T
CIVIC IV Hatchback (EC, ED, EE)																
Pro-Kit (Performance Fahrwerksfedern | *Performance Springs*)																
1.2, 1.3, 1.3 16 V KAT, 1.4 L, 1.5, 1.5 i 16V, 1.6 i 16V *1.2, 1.3, 1.3 16 V CAT, 1.4 L, 1.5, 1.5 i 16V, 1.6 i 16V*	09.87 - 12.91	725	700	E4010-140	A, 18, 20			30	30					F4010001	F4010002	T
CIVIC IV Stufenheck (ED) ***CIVIC IV Saloon (ED)***																
Pro-Kit (Performance Fahrwerksfedern | *Performance Springs*)																
1.2, 1.3, 1.4 L, 1.5, 1.5 i 16V, 1.6, 1.6 i 16V	09.87 - 12.91	725	700	E4010-140	A, 18, 20			30	30					F4010001	F4010002	T
CIVIC V Coupe (EJ)																
Pro-Kit (Performance Fahrwerksfedern | *Performance Springs*)																
1.5 i LSi, 1.6 i, 1.6 i Vtec	01.94 - 03.96	835	750	E4015-140	A, 18, 20			30	30					F4015001	F4015002	ABE
B12 Pro-Kit (Performance Komplettfahrwerke | *Performance Springs+Shocks*)																
1.5 i LSi, 1.6 i Vtec	01.94 - 03.96	835	750	E90-40-009-01-22	A, 18, 20, 78, 161			30	30					F4015001	F4015002	ABE
CIVIC V Hatchback (EG)																
Pro-Kit (Performance Fahrwerksfedern | *Performance Springs*)																
1.3 16V, 1.4 16V, 1.5 i 16V, 1.6, 1.6 16V Vtec, 1.6 VTi 16V	10.91 - 04.97	835	750	E4015-140	A, 18, 20			30	30					F4015001	F4015002	ABE
B12 Pro-Kit (Performance Komplettfahrwerke | *Performance Springs+Shocks*)																
1.3 16V, 1.4 16V, 1.5 i 16V, 1.6, 1.6 16V Vtec, 1.6 VTi 16V	10.91 - 04.97	835	750	E90-40-009-01-22	A, 18, 20, 78, 161			30	30					F4015001	F4015002	ABE

HONDA

Modell *Model*	Baujahr *Year*	Achslast Vorne kg *Front Axle Load kg*	Achslast Hinten kg *Rear Axle Load kg*	Artikel-Nr. *Part-No.*	Hinweise *Notes*	ab Nachtrag ...xx BE *from suppl. ...xx of type approval*	bis Nachtrag ...xx BE *to suppl. ...xx of type approval*	ca. Tieferl. Vorne mm *ca. Lowering Front mm*	ca. Tieferl. Hinten mm *ca. Lowering Rear mm*	Ø Vorne mm *Ø Front mm*	Ø Hinten mm *Ø Rear mm*	Verstellbarkeit Vorne *Adjustable Front*	Verstellbarkeit Hinten *Adjustable Rear*	Ersatzteilbez. Vorne *Spare Part Marking Front*	Ersatzteilbez. Hinten *Spare Part Marking Rear*	Gutachten *Homologation*
CIVIC V Stufenheck (EG, EH) ***CIVIC V Saloon (EG, EH)***																
Pro-Kit (Performance Fahrwerksfedern | *Performance Springs*)																
1.3, 1.5, 1.5 i 16V, 1.6, 1.6 16V Vtec, 1.6 EX, 1.6 VTi	10.91 - 12.95	835	750	E4015-140	A, 18, 20			30	30					F4015001	F4015002	ABE
B12 Pro-Kit (Performance Komplettfahrwerke | *Performance Springs+Shocks*)																
1.3, 1.5, 1.5 i 16V, 1.6, 1.6 16V Vtec, 1.6 EX, 1.6 VTi	10.91 - 12.95	835	750	E90-40-009-01-22	A, 18, 20, 78, 161			30	30					F4015001	F4015002	ABE
CIVIC VI Aerodeck (MB, MC)																
Pro-Kit (Performance Fahrwerksfedern | *Performance Springs*)																
1.4 16V, 1.5 16V, 1.6 16V, 1.8 16V	04.98 - 02.01	880	860	E4024-140	A, 18, 20			30	30					F4015001	F4019002	ABE
CIVIC VI Coupe (EJ, EM1)																
Pro-Kit (Performance Fahrwerksfedern | *Performance Springs*)																
1.6, 1.6 i, 1.6 i Vtec	03.96 - 12.00	860	820	E4020-140	A, 18, 20			35	35					F4015001	F4015002	ABE
CIVIC VI Fastback (MA, MB)																
Pro-Kit (Performance Fahrwerksfedern | *Performance Springs*)																
1.4 i, 1.5 16V, 1.5 i Vtec-E, 1.6, 1.6 16V, 1.6 VTi, 1.6 i, 1.6 i Vtec	09.94 - 02.01	845	840	E4019-140	A, 18, 20			30	30					F4015001	F4019002	ABE
CIVIC VI Hatchback (EJ, EK)																
Pro-Kit (Performance Fahrwerksfedern | *Performance Springs*)																
1.4 i, 1.4 i S, 1.5 i, 1.6, 1.6 VTi, 1.6 i	10.95 - 02.01	860	820	E4020-140	A, 18, 20			35	35					F4015001	F4015002	ABE
CIVIC VI Stufenheck (EJ, EK) ***CIVIC VI Saloon (EJ, EK)***																
Pro-Kit (Performance Fahrwerksfedern | *Performance Springs*)																
1.4, 1.4 i, 1.5 i, 1.6, 1.6 VTi, 1.6 i Vtec	10.95 - 02.01	860	820	E4020-140	A, 18, 20			35	35					F4015001	F4015002	ABE
CIVIC VII Coupe (EM2)																
Sportline (Performance Fahrwerksfedern Sport | *Sport Performance Springs*)																
1.6 i, 1.7 i, 1.7 i VTEC	02.01 - 12.05	855	850	E20-40-001-01-22	A, 20			45-50	30					F21-40-001-01-VA	F21-40-001-01-HA	T
B12 Sportline (Performance Komplettfahrwerke Sport | *Sport Performance Springs+Shocks*)																
1.6 i, 1.7 i, 1.7 i VTEC	02.01 - 12.05	855	850	E95-40-001-01-22	A, 20, 78, 85, 161			45-50	30					F21-40-001-01-VA	F21-40-001-01-HA	T
Pro-Street-S (Gewindefahrwerke - höhenverstellbar | *Coil-Overs-Adjustable Ride Hight*)																
1.6 i, 1.7 i, 1.7 i VTEC	02.01 - 12.05	955	825	PSS65-40-001-01-22	A, 23, 25, 45, 61, 160			35-65	35-65							T
CIVIC VII Hatchback (EU, EP, EV)																
Pro-Kit (Performance Fahrwerksfedern | *Performance Springs*)																
1.4 i, 1.4 iS (EP1), 1.6 i	03.99 - 02.06	855	850	E10-40-001-01-22	A, 18, 20			30	30					F11-40-001-01-VA	F11-40-001-01-HA	T
Sportline (Performance Fahrwerksfedern Sport | *Sport Performance Springs*)																
1.4 i, 1.4 iS (EP1), 1.6 i	03.99 - 02.06	855	850	E20-40-001-01-22	A, 20			45-50	30					F21-40-001-01-VA	F21-40-001-01-HA	T
B12 Pro-Kit (Performance Komplettfahrwerke | *Performance Springs+Shocks*)																
1.4 i, 1.4 iS (EP1), 1.6 i	03.99 - 02.06	855	850	E90-40-001-01-22	A, 18, 20, 78, 85, 161			30	30					F11-40-001-01-VA	F11-40-001-01-HA	T
B12 Sportline (Performance Komplettfahrwerke Sport | *Sport Performance Springs+Shocks*)																
1.4 i, 1.4 iS (EP1), 1.6 i	03.99 - 02.06	855	850	E95-40-001-01-22	A, 20, 78, 85, 161			45-50	30					F21-40-001-01-VA	F21-40-001-01-HA	T
Pro-Street-S (Gewindefahrwerke - höhenverstellbar | *Coil-Overs-Adjustable Ride Hight*)																
1.4 i, 1.4 iS, 1.6 i	03.99 - 02.06	955	825	PSS65-40-001-01-22	A, 23, 25, 45, 61, 160			35-65	35-65							T
2.0 i Sport, 2.0 Type-R, 1.7 CTDi	03.99 - 02.06	955	825	PSS65-40-001-02-22	A, 23, 25, 45, 62, 160			35-65	35-65							T
CIVIC VII Stufenheck (ES) ***CIVIC VII Saloon (ES)***																
Pro-Kit (Performance Fahrwerksfedern | *Performance Springs*)																
1.4, 1.6	12.00 - 09.05	855	850	E10-40-001-01-22	A, 18, 20			30	30					F11-40-001-01-VA	F11-40-001-01-HA	T
Sportline (Performance Fahrwerksfedern Sport | *Sport Performance Springs*)																
1.3 IMA, 1.4, 1.6	12.00 - 09.05	855	850	E20-40-001-01-22	A, 20			45-50	30					F21-40-001-01-VA	F21-40-001-01-HA	T
B12 Pro-Kit (Performance Komplettfahrwerke | *Performance Springs+Shocks*)																
1.4, 1.6	12.00 - 09.05	855	850	E90-40-001-01-22	A, 18, 20, 78, 85, 161			30	30					F11-40-001-01-VA	F11-40-001-01-HA	T
B12 Sportline (Performance Komplettfahrwerke Sport | *Sport Performance Springs+Shocks*)																
1.3 IMA, 1.4, 1.6	12.00 - 09.05	855	850	E95-40-001-01-22	A, 20, 78, 85, 161			45-50	30					F21-40-001-01-VA	F21-40-001-01-HA	T
Pro-Street-S (Gewindefahrwerke - höhenverstellbar | *Coil-Overs-Adjustable Ride Hight*)																
1.3 IMA, 1.4, 1.6	12.00 - 09.05	955	825	PSS65-40-001-01-22	A, 23, 25, 45, 61, 160			35-65	35-65							T
2.0, 1.7CTDi	02.01 - 09.05	955	825	PSS65-40-001-02-22	A, 23, 25, 45, 62, 160			35-65	35-65							T
CIVIC VIII Hatchback (FN, FK)																
Pro-Kit (Performance Fahrwerksfedern | *Performance Springs*)																
1.4, 1.6, 1.8, Type R	09.05 -	980	835	E10-40-011-01-22	A, 18, 20			25	25					F11-40-011-01-VA	F11-40-011-01-HA	T
2.2 CTDi	01.06 -	1085	835	E10-40-011-02-22	A, 18, 20			25	25					F11-40-011-02-VA	F11-40-011-01-HA	T
CIVIC VIII Stufenheck (FD, FA) ***CIVIC VIII Saloon (FD, FA)***																
Pro-Kit (Performance Fahrwerksfedern | *Performance Springs*)																
1.3, 1.6, 1.8, 2.0	09.05 -			E10-40-011-03-22	A, 18, 20, 210			30	30					F11-40-011-05-VL	F11-40-011-01-HA	E
2.0 i-VETC Type R	09.05 -			E10-40-011-03-22	A, 18, 20, 210			15	15					F11-40-011-05-VL	F11-40-011-01-HA	E
Pro-Street-S (Gewindefahrwerke - höhenverstellbar | *Coil-Overs-Adjustable Ride Hight*)																
1.3, 1.6, 1.8, 2.0	09.05 -	940	835	PSS65-40-011-01-22	A, 18, 23, 25, 45, 160			20-50	20-50							T
2.0 i-VETC Type R	09.05 -	1085	835	PSS65-40-011-02-22	A, 18, 23, 25, 45, 160			20-50	20-50							T

HONDA

Modell *Model*	Baujahr *Year*	Achslast Vorne kg *Front Axle Load kg*	Achslast Hinten kg *Rear Axle Load kg*	Artikel-Nr. *Part-No.*	Hinweise *Notes*	ab Nachtrag ...xx BE *from suppl. ...xx of type approval*	bis Nachtrag ...xx BE *to suppl. ...xx of type approval*	ca. Tieferl. Vorne mm *ca. Lowering Front mm*	ca. Tieferl. Hinten mm *ca. Lowering Rear mm*	Ø Vorne mm *Ø Front mm*	Ø Hinten mm *Ø Rear mm*	Verstellbarkeit Vorne *Adjustable Front*	Verstellbarkeit Hinten *Adjustable Rear*	Ersatzteilbez. Vorne *Spare Part Marking Front*	Ersatzteilbez. Hinten *Spare Part Marking Rear*	Gutachten *Homologation*
CIVIC IX (FK)																
Pro-Kit (Performance Fahrwerksfedern | *Performance Springs*)																
1.4 i-VTEC, 1.8 i-VTEC	02.12 -	990	845	E10-40-011-09-22	A, 18, 20			30	25					F11-40-011-09-VA	F11-40-011-09-HA-L/R	T
1.6 i-DTEC	02.13 -	1050	845	E10-40-011-11-22	A, 18, 20			30	25					F11-40-011-02-VA	F11-40-011-09-HA-L/R	T
2.2 i-DTEC	02.12 -	1090	845	E10-40-011-10-22	A, 18, 20			30	25					F11-40-011-10-VA	F11-40-011-09-HA-L/R	T
B12 Pro-Kit (Performance Komplettfahrwerke | *Performance Springs+Shocks*)																
1.4 i-VTEC, 1.8 i-VTEC	02.12 -	990	845	E90-40-011-09-22	A, 18, 20, 78, 161			30	25					F11-40-011-09-VA	F11-40-011-09-HA-L/R	T
1.6 i-DTEC	02.13 -	1050	845	E90-40-011-11-22	A, 18, 20, 78, 161			30	25					F11-40-011-02-VA	F11-40-011-09-HA-L/R	T
2.2 i-DTEC	02.12 -	1090	845	E90-40-011-10-22	A, 18, 20, 78, 161			30	25					F11-40-011-10-VA	F11-40-011-09-HA-L/R	T
Pro-Street-S (Gewindefahrwerke - höhenverstellbar | *Coil-Overs-Adjustable Ride Hight*)																
1.4 i-VTEC, 1.6 i-DTEC, 1.8 i-VTEC, 2.2 i-DTEC	02.12 -	1090	845	PSS65-40-011-04-22	A, 18, 23, 25, 45, 160			25-55	15-50							T
CIVIC IX Tourer (FK)																
Pro-Kit (Performance Fahrwerksfedern | *Performance Springs*)																
1.8 i-VTEC	01.14 -	990	895	E10-40-011-13-22	A, 18, 20			30	15					F11-40-011-09-VA	F11-40-011-13-HA-L/-R	T
1.6 i-DTEC	01.14 -	1050	895	E10-40-011-14-22	A, 18, 20			30	15					F11-40-011-02-VA	F11-40-011-13-HA-L/-R	T
CR-V III (RE)																
Pro-Kit (Performance Fahrwerksfedern | *Performance Springs*)																
2.0 i 4WD, 2.4, 2.4 4WD, 2.4i-VTEC 4WD, 2.2i-CTDI 4WD, 2.2 i-DTEC 4WD	01.07 -	1170	1055	E10-40-012-01-22	A, 18			30-35	25					F11-40-012-01-VL F11-40-012-01-VR	F11-40-012-01-HA	T
Pro-Lift-Kit (Performance Höherlegung | *Performance Lift Springs*)																
2.0 i 4WD, 2.4, 2.4 4WD, 2.4 i-VTEC 4WD	10.06 -	1170	1055	E30-40-012-01-22	A, 18			+25	+30					F31-40-012-01-FL F31-40-012-01-FR	F31-40-012-01-RA	
2.2 i-CTDi 4WD, 2.2 i-DTEC 4WD	10.06 -	1220	1055	E30-40-012-02-22	A, 18			+25	+30					F31-40-012-02-FL F31-40-012-02-FR	F31-40-012-01-RA	T
B12 Pro-Kit (Performance Komplettfahrwerke | *Performance Springs+Shocks*)																
2.0 i 4WD ohne Xenon, 2.2 i-CTDi 4WD ohne Xenon, 2.2 i-DTEC 4WD ohne Xenon	01.07 -	1140	1040	E90-40-012-01-22	A, 18, 78, 161			30-35	25					F11-40-012-01-VL F11-40-012-01-VR	F11-40-012-01-HA	T
2.0 i 4WD, 2.4, 2.4 4WD, 2.4i-VTEC 4WD, 2.2i-CTDI 4WD, 2.2 i-DTEC 4WD	10.06 -	1170	1055	E90-40-012-01-22	A, 18, 78, 161			30-35	25							T
CR-V IV (RE)																
Pro-Kit (Performance Fahrwerksfedern | *Performance Springs*)																
2.0, 2.0 AWD, 2.4, 2.4 AWD, 1.6 i-DTEC 4WD, 2.2 i-DTEC AWD	01.12 -	1170	1055	E10-40-012-01-22	A, 18			30-35	25					F11-40-012-01-VL F11-40-012-01-VR	F11-40-012-01-HA	T
Pro-Lift-Kit (Performance Höherlegung | *Performance Lift Springs*)																
2.0, 2.0 AWD, 2.4, 2.4 AWD, 1.6 i-DTEC	01.12 -	1170	1055	E30-40-012-01-22	A, 18			+25	+30					F31-40-012-01-FL F31-40-012-01-FR	F31-40-012-01-RA	
2.2 i-DTEC AWD	01.12 -	1220	1055	E30-40-012-02-22	A, 18			+25	+30					F31-40-012-02-FL F31-40-012-02-FR	F31-40-012-01-RA	T
B12 Pro-Kit (Performance Komplettfahrwerke | *Performance Springs+Shocks*)																
2.0, 2.0 AWD, 2.4, 2.4 AWD, 1.6 i-DTEC, 2.2 i-DTEC AWD	01.12 -	1170	1055	E90-40-012-01-22	A, 18, 78, 161			30-35	25					F11-40-012-01-VL F11-40-012-01-VR	F11-40-012-01-HA	T
CR-Z (ZF1)																
Pro-Kit (Performance Fahrwerksfedern | *Performance Springs*)																
1.5 Hybrid	06.10 -	825	705	E10-40-017-01-22	A, 18, 20			25	25					F11-40-014-02-VA	F11-40-017-01-HA	T
INTEGRA Coupe (DC2, DC4)																
Pro-Kit (Performance Fahrwerksfedern | *Performance Springs*)																
1.8 Type-R	11.97 - 10.01	835	750	E4023-140	A, 18, 20			25	25					F4015001	F4015002	ABE
JAZZ II (GD)																
Pro-Kit (Performance Fahrwerksfedern | *Performance Springs*)																
1.2, 1.4	03.02 - 07.08	800	730	E10-40-005-01-22	A, 18, 20			30	30					F11-40-005-01-VA	F11-40-005-01-HA	T
JAZZ III (GE)																
Pro-Kit (Performance Fahrwerksfedern | *Performance Springs*)																
1.2, 1.4 i	07.08 -	840	860	E10-40-014-02-22	A, 18, 20			20	20					F11-40-014-02-VA	F11-40-014-01-HA	T
PRELUDE IV (BB)																
Pro-Kit (Performance Fahrwerksfedern | *Performance Springs*)																
2.0 i 16V, 2.2 i 16V Vtec, 2.3 i 16V	02.92 - 09.96	980	825	E4016-140	A, 18, 20			30	30					F4016001	F4016002	T
PRELUDE V (BB)																
Pro-Kit (Performance Fahrwerksfedern | *Performance Springs*)																
2.0 16V, 2.2 16V	10.96 - 10.00	980	825	E4021-140	A, 18, 20			30	30					F4016001	F4016002	T
S2000 (AP)																
Pro-Kit (Performance Fahrwerksfedern | *Performance Springs*)																
2.0, 2.0 Vtec	03.99 -	750	900	E4043-140	A, 18, 20			25	30					F4043001	F4043002	T
STREAM (RN)																
Pro-Kit (Performance Fahrwerksfedern | *Performance Springs*)																
1.7 16V, 2.0 16V	05.01 -	955	1130	E10-40-003-01-22	A, 18, 20			30	30					F11-40-003-01-VA	F11-40-003-01-HA	T

HYUNDAI

ACCENT III (MC)																
Pro-Kit (Performance Fahrwerksfedern | *Performance Springs*)																
1.5 CRDi GLS	11.05 - 11.10	910	850	E10-42-014-02-22	A, 18, 20			30	30					F11-42-014-02-VA	F11-42-014-01-HA	T
ACCENT IV (RB)																
Pro-Kit (Performance Fahrwerksfedern | *Performance Springs*)																
1.4, 1.6, 1.6 GDI, 1.6 CRDi	11.10 -			E10-46-023-01-22	A, 18, 20, 210			30	30					F11-46-023-01-VA	F11-46-023-01-HA	E
ACCENT IV Stufenheck (RB) ***ACCENT IV Saloon (RB)***																
Pro-Kit (Performance Fahrwerksfedern | *Performance Springs*)																
1.4, 1.6, 1.6 CVVT-I, 1.6 GDI, 1.4 CRDi, 1.6 CRDi	11.10 -			E10-46-023-01-22	A, 18, 20, 210			30	30					F11-46-023-01-VA	F11-46-023-01-HA	E
ACCENT Stufenheck (MC) ***ACCENT Saloon (MC)***																
Pro-Kit (Performance Fahrwerksfedern | *Performance Springs*)																
1.5 CRDi GLS	11.05 - 11.10	910	850	E10-42-014-02-22	A, 18, 20			30	30					F11-42-014-02-VA	F11-42-014-01-HA	T

HYUNDAI

HYUNDAI

Modell	Baujahr	Achslast Vorne kg	Achslast Hinten kg	Artikel-Nr.	Hinweise	ab Nachtrag ...xx BE	bis Nachtrag ...xx BE	ca. Tieferl. Vorne mm	ca. Tieferl. Hinten mm	Ø Vorne mm	Ø Hinten mm	Verstellbarkeit Vorne	Verstellbarkeit Hinten	Ersatzteilbez. Vorne	Ersatzteilbez. Hinten	Gutachten
Model	*Year*	*Front Axle Load kg*	*Rear Axle Load kg*	*Part-No.*	*Notes*	*from suppl. ...xx of type approval*	*to suppl. ...xx of type approval*	*ca. Lowering Front mm*	*ca. Lowering Rear mm*	*Ø Front mm*	*Ø Rear mm*	*Adjustable Front*	*Adjustable Rear*	*Spare Part Marking Front*	*Spare Part Marking Rear*	*Homologation*
COUPE (GK)																
Pro-Kit (Performance Fahrwerksfedern | *Performance Springs*)																
2.0, 2.0 GLS, 2.7 V6	08.01 - 08.09	1015	880	E10-42-003-01-22	A, 18, 20			30	30					F11-42-003-01-VA	F11-42-003-01-HA	T
Sportline (Performance Fahrwerksfedern Sport | *Sport Performance Springs*)																
2.0, 2.0 GLS, 2.7 V6	08.01 - 08.09	1000	860	E20-42-003-02-22	A, 18, 20			45-50	30					F21-42-003-02-VA	F21-42-003-02-HA	T
B12 Pro-Kit (Performance Komplettfahrwerke | *Performance Springs+Shocks*)																
2.0, 2.0 GLS, 2.7 V6	08.01 - 08.09	1015	880	E90-42-003-01-22	A, 18, 20, 78, 161			30	30					F11-42-003-01-VA	F11-42-003-01-HA	T
B12 Sportline (Performance Komplettfahrwerke Sport | *Sport Performance Springs+Shocks*)																
2.0, 2.0 GLS, 2.7 V6	08.01 - 08.09	1000	860	E95-42-003-02-22	A, 18, 20, 78, 161			45-50	30					F21-42-003-02-VA	F21-42-003-02-HA	T
ELANTRA (MD, DU)																
Pro-Kit (Performance Fahrwerksfedern | *Performance Springs*)																
1.6, 1.8, 2.0	09.10 -			E10-42-025-01-22	A, 18, 20, 210			30	20					F11-42-025-01-VA	F11-42-025-01-HA	E
1.6 CRDi	02.11 -			E10-42-025-02-22	A, 18, 20, 210			30	20					F11-42-025-02-VA	F11-42-025-02-HA	E
GENESIS Coupe																
Pro-Kit (Performance Fahrwerksfedern | *Performance Springs*)																
2.0 T, 3.8 V6	01.08 -	1010	1050	E10-42-019-03-22	A, 18, 20			20	10					F11-42-019-03-VA	F11-42-019-02-HA	T
GRAND SANTA FE																
Pro-Kit (Performance Fahrwerksfedern | *Performance Springs*)																
2.0 T-GDI, 3.0 GDi Allrad, 3.3 GDi, 3.3 GDi Allrad, 3.4 Allrad, 2.2 CRDi Allrad	06.13 -	1350	1450	E10-46-018-01-22	A, 18			20	20					F11-46-018-01-VA	F11-46-018-01-HA	T
Pro-Lift-Kit (Performance Höherlegung | *Performance Lift Springs*)																
2.0 T-GDI, 3.0 GDi Allrad, 3.3 GDi, 3.3 GDi Allrad, 3.4 Allrad, 2.2 CRDi Allrad	06.13 -	1350	1450	E30-42-031-01-22	A, 18			+25	+25					F31-42-031-01-VA	F31-42-031-01-HA	T
i10																
Pro-Kit (Performance Fahrwerksfedern | *Performance Springs*)																
1.0, 1.1, 1.2	12.07 -	750	750	E10-42-018-01-22	A, 18, 20			25	20					F11-42-007-01-VA	F11-42-018-01-HA	T
i10 (BA)																
Pro-Kit (Performance Fahrwerksfedern | *Performance Springs*)																
1.0, 1.2	12.13 -	750	780	E10-42-034-01-22	A, 18, 20			30	20					F11-15-021-02-VA	F11-46-009-03-HA	T
i20 (GB)																
Pro-Kit (Performance Fahrwerksfedern | *Performance Springs*)																
1.2, 1.4	11.14 -	920	840	E10-42-037-01-22	A, 18, 20			25	25					F11-42-037-01-FA	F11-42-037-01-RA	T
1.4, 1.1 CRDi, 1.4 CRDi	11.14 -	920	840	E10-42-037-02-22	A, 18, 20			25	25					F11-42-037-02-FA	F11-42-037-01-RA	T
i20 (PB, PBT)																
Pro-Kit (Performance Fahrwerksfedern | *Performance Springs*)																
1.2, 1.4, 1.6	09.08 -	850	840	E10-42-020-02-22	A, 18, 20			25	20					F11-46-023-01-VA	F11-42-020-01-HA	T
1.2, 1.4, 1.6	09.08 -	850	840	E10-42-020-01-22	A, 18, 20			20-25	20					F11-42-020-01-VA	F11-42-020-01-HA	T
i30 (FD)																
Pro-Kit (Performance Fahrwerksfedern | *Performance Springs*)																
1.4, 1.6	03.09 - 11.11	1010	940	E10-42-016-05-22	A, 18, 20			30	20					F11-42-016-05-VA	F11-46-015-01-HA	T
1.4, 1.6	10.07 - 11.11	1010	940	E10-42-016-01-22	A, 18, 20			25	20					F11-46-015-01-VA	F11-46-015-01-HA	T
1.6 CRDi, 2.0, 2.0 CRDi	03.09 - 11.11	1090	940	E10-42-016-06-22	A, 18, 20			30	20					F11-42-016-06-VA	F11-46-015-01-HA	T
1.6 CRDi, 2.0, 2.0 CRDi	10.07 - 11.11	1090	940	E10-42-016-02-22	A, 18, 20			25	20					F11-46-015-02-VA	F11-46-015-01-HA	T
i30 (GD)																
Pro-Kit (Performance Fahrwerksfedern | *Performance Springs*)																
1.4, 1.6, 1.6 GDI	11.11 -	1050	960	E10-46-025-01-22	A, 18, 20			20	20					F11-46-025-01-VA	F11-46-025-01-HA	T
1.6 T-GDi	01.15 -	1050	960	E10-46-025-01-22	A, 18, 20			10	10					F11-46-025-01-VA	F11-46-025-01-HA	T
1.4 CRDi, 1.6 CRDi	11.11 -	1050	960	E10-46-025-02-22	A, 18, 20			20	20					F11-42-024-01-VA	F11-46-025-01-HA	T
i30 CW (FD)																
Pro-Kit (Performance Fahrwerksfedern | *Performance Springs*)																
1.4, 1.6	10.07 - 06.12	1010	1050	E10-42-016-03-22	A, 18, 20			30	20-25					F11-46-015-01-VA	F11-46-015-03-HA	T
1.4, 1.6	03.09 - 06.12	1010	1050	E10-42-016-07-22	A, 18, 20			30	20-25					F11-42-016-05-VA	F11-46-015-03-HA	T
1.6 CRDi, 2.0, 2.0 CRDi	02.08 - 06.12	1090	1050	E10-42-016-04-22	A, 18, 20			30-40	20-25					F11-46-015-02-VA	F11-46-015-03-HA	T
1.6 CRDi, 2.0, 2.0 CRDi	03.09 - 06.12	1090	1050	E10-42-016-08-22	A, 18, 20			30	20-25					F11-42-016-06-VA	F11-46-015-03-HA	T
B12 Pro-Kit (Performance Komplettfahrwerke | *Performance Springs+Shocks*)																
1.4, 1.6	10.07 - 02.09	1010	1050	E90-42-016-03-22	A, 18, 20, 78, 161			30	20-25					F11-46-015-01-VA	F11-46-015-03-HA	T
1.4, 1.6	03.09 - 06.12	1010	1050	E90-42-016-07-22	A, 18, 20, 78, 161			30	20-25					F11-42-016-05-VA	F11-46-015-03-HA	T
1.6 CRDi, 2.0, 2.0 CRDi	10.07 - 02.09	1090	1050	E90-42-016-04-22	A, 18, 20, 78, 161			30-40	20-25					F11-46-015-02-VA	F11-46-015-03-HA	T
1.6 CRDi, 2.0, 2.0 CRDi	03.09 - 06.12	1090	1050	E90-42-016-08-22	A, 18, 20, 78, 161			30	20-25					F11-42-016-06-VA	F11-46-015-03-HA	T
i30 CW (GD)																
Pro-Kit (Performance Fahrwerksfedern | *Performance Springs*)																
1.4, 1.6, 1.6 GDI	06.12 -	1050	1050	E10-46-025-03-22	A, 18, 20			25	25					F11-46-025-01-VA	F11-46-013-01-HA	T
1.4 CRDi, 1.6 CRDi	06.12 -	1050	1050	E10-46-025-04-22	A, 18, 20			20	25					F11-42-024-01-VA	F11-46-013-01-HA	T
i30 Coupe (GD)																
Pro-Kit (Performance Fahrwerksfedern | *Performance Springs*)																
1.4, 1.6 GDI	05.13 -	1050	960	E10-46-025-01-22	A, 18, 20			20	20					F11-46-025-01-VA	F11-46-025-01-HA	T
1.4 CRDi, 1.6 CRDi	05.13 -	1050	960	E10-46-025-02-22	A, 18, 20			20	20					F11-42-024-01-VA	F11-46-025-01-HA	T
1.6 T-GDi	01.15 -	1050	960	E10-46-025-01-22	A, 18, 20			10	10					F11-46-025-01-VA	F11-46-025-01-HA	T

HYUNDAI

Modell	Baujahr	Achslast Vorne kg	Achslast Hinten kg	Artikel-Nr.	Hinweise	ab Nachtrag ...xx BE	bis Nachtrag ...xx BE	ca. Tieferl. Vorne mm	ca. Tieferl. Hinten mm	Ø Vorne mm	Ø Hinten mm	Verstellbarkeit Vorne	Verstellbarkeit Hinten	Ersatzteilbez. Vorne	Ersatzteilbez. Hinten	Gutachten
Model	*Year*	*Front Axle Load kg*	*Rear Axle Load kg*	*Part-No.*	*Notes*	*from suppl. ...xx of type approval*	*to suppl. ...xx of type approval*	*ca. Lowering Front mm*	*ca. Lowering Rear mm*	*Ø Front mm*	*Ø Rear mm*	*Adjustable Front*	*Adjustable Rear*	*Spare Part Marking Front*	*Spare Part Marking Rear*	*Homologation*
i40 (VF)																
Pro-Kit (Performance Fahrwerksfedern | *Performance Springs*)																
1.6 GDI, 2.0, 2.0 GDI, 1.7 CRDi	03.12 -	1200	1200	E10-42-029-02-22	A, 18, 20			30	25					F11-42-024-05-VA	F11-42-024-01-HA	T
B12 Pro-Kit (Performance Komplettfahrwerke | *Performance Springs+Shocks*)																
1.6 GDI, 2.0, 2.0 GDI, 1.7 CRDi	03.12 -	1200	1200	E90-42-029-02-22	A, 18, 20, 78, 161			30	25					F11-42-024-05-VA	F11-42-024-01-HA	T
i40 CW (VF)																
Pro-Kit (Performance Fahrwerksfedern | *Performance Springs*)																
1.6 GDI, 2.0, 2.0 GDI, 1.7 CRDi	07.11 -	1200	1200	E10-42-029-02-22	A, 18, 20			30	25					F11-42-024-05-VA	F11-42-024-01-HA	T
B12 Pro-Kit (Performance Komplettfahrwerke | *Performance Springs+Shocks*)																
1.6 GDI, 2.0, 2.0 GDI, 1.7 CRDi	07.11 -	1200	1200	E90-42-029-02-22	A, 18, 20, 78, 161			30	25					F11-42-024-05-VA	F11-42-024-01-HA	T
ix35 (LM)																
Pro-Kit (Performance Fahrwerksfedern | *Performance Springs*)																
2.0 4WD, 2.0 GDI 4WD	01.10 -	1200	1090	E10-42-024-01-22	A, 18			30	25					F11-42-024-01-VA	F11-42-024-01-HA	T
2.4 4WD, 2.0 CRDi 4WD, 2.4 DCVVT-I 4WD	01.10 -	1200	1090	E10-42-024-02-22	A, 18			30	25					F11-42-024-02-VA	F11-42-024-01-HA	T
1.6, 2.0, 2.0 GDI	01.10 -	1200	1090	E10-42-024-03-22	A, 18, 20			30	25					F11-42-024-01-VA	F11-46-013-01-HA	T
1.7 CRDi, 2.0 CRDi	01.10 -	1200	1090	E10-42-024-04-22	A, 18, 20			30	25					F11-42-024-02-VA	F11-46-013-01-HA	T
Pro-Lift-Kit (Performance Höherlegung | *Performance Lift Springs*)																
1.6, 2.0, 2.0 GDI	01.10 -	1200	1090	E30-42-024-01-22	A, 18, 20			+25	+25					F31-42-024-01-VA	F31-42-024-01-HA	T
2.0 4WD, 2.0 GDI 4WD	01.10 -	1200	1090	E30-42-024-02-22	A, 18			+25	+25					F31-42-024-01-VA	F31-42-024-02-HA	T
1.7 CRDi, 2.0 CRDi	01.10 -	1200	1090	E30-42-024-03-22	A, 18, 20			+25	+25					F31-42-024-03-VA	F31-42-024-01-HA	T
2.4 4WD, 2.0 CRDi 4WD, 2.4 DCVVT-I 4WD	01.10 -	1200	1090	E30-42-024-04-22	A, 18			+25	+25					F31-42-024-03-VA	F31-42-024-02-HA	T
ix55																
Pro-Kit (Performance Fahrwerksfedern | *Performance Springs*)																
3.0 V6 CRDi 4WD	09.08 -	1465	1500	E10-42-023-01-22	A, 18			25	30					F11-42-023-01-VA	F11-46-018-01-HA	T
SANTA FÉ II (CM)																
Pro-Kit (Performance Fahrwerksfedern | *Performance Springs*)																
2.2 CRDi, 2.2 CRDi 4x4, 2.2 CRDi GLS, 2.2 CRDi GLS 4x4, 2.4, 2.4 4x4	01.10 -	1350	1450	E10-42-013-02-22	A, 65			25-30	30					F11-46-018-01-VA	F11-42-013-01-HA	T
SANTA FÉ III (DM)																
Pro-Kit (Performance Fahrwerksfedern | *Performance Springs*)																
2.4, 2.4 4WD, 3.3 4WD, 2.0 CRDi, 2.0 CRDi 4WD, 2.2 CRDi, 2.2 CRDi 4WD	09.12 -	1350	1450	E10-46-018-01-22	A, 18			25	25					F11-46-018-01-VA	F11-46-018-01-HA	T
Pro-Lift-Kit (Performance Höherlegung | *Performance Lift Springs*)																
2.4, 2.4 4WD, 3.3 4WD, 2.0 CRDi, 2.0 CRDi 4WD, 2.2 CRDi, 2.2 CRDi 4WD	09.12 -	1350	1450	E30-42-031-01-22	A, 18			+25	+25					F31-42-031-01-VA	F31-42-031-01-HA	T
SOLARIS (RB)																
Pro-Kit (Performance Fahrwerksfedern | *Performance Springs*)																
1.4, 1.6, 1.6 GDI, 1.6 CRDi	11.10 -			E10-46-023-01-22	A, 18, 20, 210			30	30					F11-46-023-01-VA	F11-46-023-01-HA	E
SOLARIS Stufenheck (RB) ***SOLARIS Saloon (RB)***																
Pro-Kit (Performance Fahrwerksfedern | *Performance Springs*)																
1.4, 1.6, 1.6 GDI, 1.6 CRDi	11.10 -			E10-46-023-01-22	A, 18, 20, 210			30	30					F11-46-023-01-VA	F11-46-023-01-HA	E
SONATA V (NF)																
Pro-Kit (Performance Fahrwerksfedern | *Performance Springs*)																
2.0 VVTi GLS, 2.4	01.05 -	1200	1070	E10-42-011-01-22	A, 18, 20			30	30					F4213001	F11-42-011-01-HA	T
TUCSON (JM)																
Pro-Kit (Performance Fahrwerksfedern | *Performance Springs*)																
2.0, 2.0 Allrad, 2.0 CRDi, 2.0 CRDi Allrad, 2.7 Allrad *2.0, 2.0 All-wheel Drive, 2.0 CRDi, 2.0 CRDi All-wheel Drive, 2.7 All-wheel Drive*	08.04 - 03.10	1220	1200	E10-42-010-01-22	A			25-35	25					F11-42-010-01-VA	F11-42-010-01-HA	T
TUCSON (TLE)																
Pro-Kit (Performance Fahrwerksfedern | *Performance Springs*)																
1.6, 1.6 Allrad, 1.6 GDi, 1.6 T-GDi, 1.6 T-GDi Allrad, 1.7 CRDi	06.15 -	1280	1150	E10-42-038-01-22	A, 18			25	25					F11-42-038-01-FA	F11-42-038-01-RA	T
2.0 CRDi, 2.0 CRDi Allrad	06.15 -	1280	1150	E10-42-038-02-22	A, 18			25	25					F11-42-038-02-FA	F11-42-038-01-RA	T
Pro-Lift-Kit (Performance Höherlegung | *Performance Lift Springs*)																
1.6, 1.6 Allrad, 1.6 GDi, 1.6 T-GDi, 1.6 T-GDi Allrad, 1.7 CRDi	06.15 -	1280	1150	E30-42-038-01-22	A, 18			+25	+25					F31-42-038-01-FA	F31-42-038-01-RA	T
2.0 CRDi, 2.0 CRDi Allrad	06.15 -	1280	1150	E30-42-038-02-22	A, 18			+25	+25					F31-42-038-02-FA	F31-42-038-01-RA	T
VELOSTER (FS)																
Pro-Kit (Performance Fahrwerksfedern | *Performance Springs*)																
1.6 GDI	03.11 -	930	840	E10-42-027-01-22	A, 18, 20			25	20					F11-42-027-01-VA	F11-46-019-01-HA	T
1.6 T-GDI	10.12 -	960	840	E10-42-027-02-22	A, 18, 20			30	20					F11-42-025-01-VA	F11-46-019-01-HA	T

JAGUAR

X-TYPE (CF1)																
Pro-Kit (Performance Fahrwerksfedern | *Performance Springs*)																
2.0, 2.5 V6 Allrad, 3.0 V6 Allrad, 2.0D, 2.2D	06.01 - 11.09	1150	1115	E10-45-002-01-22	A, 18, 21			30-35	25-30					F11-45-002-01-VA	F11-45-002-01-HA	T
B12 Pro-Kit (Performance Komplettfahrwerke | *Performance Springs+Shocks*)																
2.0, 2.0D, 2.2D	06.01 - 11.09	1150	1115	E90-45-002-01-22	A, 18, 20, 21, 78, 161			30-35	25-30					F11-45-002-01-VA	F11-45-002-01-HA	T
XF (_J05_, CC9)																
Pro-Kit (Performance Fahrwerksfedern | *Performance Springs*)																
2.2 D, 2.7 D, 3.0 D, 4.2, 4.2 Kompressor	03.08 -	1215	1270	E10-45-004-01-22	A, 18, 20			30	25					F11-45-004-01-VA	F11-45-004-01-HA	T

HYUNDAI

JAGUAR

JEEP

KIA

Modell	Baujahr	Achslast Vorne kg	Achslast Hinten kg	Artikel-Nr.	Hinweise	ab Nachtrag ...xx BE	bis Nachtrag ...xx BE	ca. Tieferl. Vorne mm	ca. Tieferl. Hinten mm	Ø Vorne mm	Ø Hinten mm	Verstellbarkeit Vorne	Verstellbarkeit Hinten	Ersatzteilbez. Vorne	Ersatzteilbez. Hinten	Gutachten
Model	*Year*	*Front Axle Load kg*	*Rear Axle Load kg*	*Part-No.*	*Notes*	*from suppl. ...xx of type approval*	*to suppl. ...xx of type approval*	*ca. Lowering Front mm*	*ca. Lowering Rear mm*	*Ø Front mm*	*Ø Rear mm*	*Adjustable Front*	*Adjustable Rear*	*Spare Part Marking Front*	*Spare Part Marking Rear*	*Homologation*
CHEROKEE (KL)																
Pro-Lift-Kit (Performance Höherlegung | *Performance Lift Springs*)																
2.0 CRD, 2.0 CRD 4x4, 3.2 V4 4x4	11.13 -	1275	1275	E30-28-016-01-22	A, 18			+30	+30					F31-28-016-01-FA	F31-28-016-01-RA	T
COMMANDER (XK)																
Pro-Kit (Performance Fahrwerksfedern | *Performance Springs*)																
3.0 CRD, 4.7 V8, 5.7 V8	09.05 - 12.10	1340	1660	E10-28-010-01-22	A, 18			30	30					F11-28-010-01-VA	F11-28-010-01-HA	T
GRAND CHEROKEE II (WJ, WG)																
Pro-Kit (Performance Fahrwerksfedern | *Performance Springs*)																
2.7 CRD 4x4, 2.7 CRD Laredo, 4.0, 4.0 4x4, 4.7, 4.7 V8, 4.7 V8 4x4	10.98 - 09.05	1250	1340	E2837-540	A, 18			30	30					F28375001	F28375002	T
GRAND CHEROKEE III (WH, WK)																
Pro-Kit (Performance Fahrwerksfedern | *Performance Springs*)																
3.0 CRD, 4.7 V8, 5.7 V8	06.05 - 12.10	1340	1660	E10-28-010-01-22	A, 18			30	30					F11-28-010-01-VA	F11-28-010-01-HA	T
RENEGADE (BU)																
Pro-Kit (Performance Fahrwerksfedern | *Performance Springs*)																
1.4, 1.4 4x4, 1.6, 1.6 CRD, 2.0 CRD, 2.0 CRD 4x4	07.14 -	1050	900	E10-51-018-01-22	A, 18, 219									F11-51-018-01-FA	F11-51-018-01-RA	T
Pro-Lift-Kit (Performance Höherlegung | *Performance Lift Springs*)																
1.4, 1.4 4x4, 1.6, 1.6 CRD, 2.0 CRD, 2.0 CRD 4x4	07.14 -	1050	900	E30-51-018-01-22	A, 18, 218, 219			+30	+30					F31-51-018-01-FA	F31-51-018-01-RA	T
CEE'D																
Pro-Kit (Performance Fahrwerksfedern | *Performance Springs*)																
1.4 CVVT, 1.6 CVVT, 1.6 GDI	05.12 -	1050	960	E10-46-025-01-22	A, 18, 20			20	20					F11-46-025-01-VA	F11-46-025-01-HA	T
1.4 CRDi 90, 1.6 CRDi 90, 1.6 CRDi 110, 1.6 CRDi 115, 1.6 CRDi 128, 1.6 CRDi 136	05.12 -	1050	960	E10-46-025-02-22	A, 18, 20			20	20					F11-42-024-01-VA	F11-46-025-01-HA	T
1.6 GT	05.12 -	1050	960	E10-46-025-01-22	A, 18, 20			10	10					F11-46-025-01-VA	F11-46-025-01-HA	T
CEE'D Schrägheck (ED)																
CEE'D Hatchback (ED)																
Pro-Kit (Performance Fahrwerksfedern | *Performance Springs*)																
1.4, 1.4 CVVT, 1.6, 1.6 CVVT	12.06 -	1010	940	E10-46-015-05-22	A, 18, 20, 63			25	20					F11-42-016-05-VA	F11-46-015-01-HA	T
1.4, 1.6	12.06 - 12.09	1010	940	E10-46-015-01-22	A, 18, 20			30	20					F11-46-015-01-VA	F11-46-015-01-HA	T
1.6 CRDi 115, 1.6 CRDi 128, 1.6 CRDi 90, 2.0, 2.0 CRDi 140	12.06 -	1090	940	E10-46-015-06-22	A, 18, 20, 63			25	20					F11-42-016-06-VA	F11-46-015-01-HA	T
1.6 CRDi 115, 1.6 CRDi 90, 2.0, 2.0 CRDi 140	12.06 - 12.09	1090	940	E10-46-015-02-22	A, 18, 20			30-35	20					F11-46-015-02-VA	F11-46-015-01-HA	T
B12 Pro-Kit (Performance Komplettfahrwerke | *Performance Springs+Shocks*)																
1.4, 1.4 CVVT, 1.6	12.06 -	1010	940	E90-46-015-01-22	A, 18, 20, 78, 161			30	20					F11-46-015-01-VA	F11-46-015-01-HA	T
1.4, 1.4 CVVT, 1.6, 1.6 CVVT	12.06 -	1010	940	E90-46-015-05-22	A, 18, 20, 63, 78, 161			25	20					F11-42-016-05-VA	F11-46-015-01-HA	T
1.6 CRDi 115, 1.6 CRDi 128, 1.6 CRDi 90, 2.0, 2.0 CRDi 140	12.06 -	1090	940	E90-46-015-06-22	A, 18, 20, 63, 78, 161			25	20					F11-42-016-06-VA	F11-46-015-01-HA	T
1.6 CRDi 115, 1.6 CRDi 90, 2.0, 2.0 CRDi 140	12.06 -	1090	940	E90-46-015-02-22	A, 18, 20, 78, 161			30-35	20					F11-46-015-02-VA	F11-46-015-01-HA	T
CEE'D SW (ED)																
Pro-Kit (Performance Fahrwerksfedern | *Performance Springs*)																
1.4, 1.6	09.07 - 10.09	1010	1050	E10-46-015-03-22	A, 18, 20			30	20-25					F11-46-015-01-VA	F11-46-015-03-HA	T
1.6 CRDi 115, 1.6 CRDi 90, 2.0, 2.0 CRDi 140	09.07 - 10.09	1090	1050	E10-46-015-04-22	A, 18, 20			30-35	20-25					F11-46-015-02-VA	F11-46-015-03-HA	T
1.4, 1.4 CVVT, 1.6, 1.6 CVVT	11.09 -	1010	1050	E10-46-015-07-22	A, 18, 20, 63			25	20-25					F11-42-016-05-VA	F11-46-015-03-HA	T
1.6 CRDi 115, 1.6 CRDi 128, 1.6 CRDi 90, 2.0, 2.0 CRDi 140	11.09 -	1090	1050	E10-46-015-08-22	A, 18, 20, 63			25	20-25					F11-42-016-06-VA	F11-46-015-03-HA	T
B12 Pro-Kit (Performance Komplettfahrwerke | *Performance Springs+Shocks*)																
1.6 CRDi 115, 1.6 CRDi 90, 2.0, 2.0 CRDi 140	09.07 - 10.09	1090	1050	E90-46-015-04-22	A, 18, 20, 78, 161			30-35	20-25					F11-46-015-02-VA	F11-46-015-03-HA	T
1.4, 1.4 CVVT, 1.6, 1.6 CVVT	11.09 -	1010	1050	E90-46-015-07-22	A, 18, 20, 63, 78, 161			25	20-25					F11-42-016-05-VA	F11-46-015-03-HA	T
1.6 CRDi 115, 1.6 CRDi 128, 1.6 CRDi 90, 2.0, 2.0 CRDi 140	11.09 -	1090	1050	E90-46-015-08-22	A, 18, 20, 63, 78, 161			25	20-25					F11-42-016-06-VA	F11-46-015-03-HA	T
CEE`D Sportswagon																
Pro-Kit (Performance Fahrwerksfedern | *Performance Springs*)																
1.4 CVVT, 1.6 GDI	09.12 -	1050	1050	E10-46-025-03-22	A, 18, 20			25	25					F11-46-025-01-VA	F11-46-013-01-HA	T
1.4 CRDi, 1.6 CRDi, 1.6 CRDi 136	09.12 -	1050	1050	E10-46-025-04-22	A, 18, 20			20	25					F11-42-024-01-VA	F11-46-013-01-HA	T
MAGENTIS (MG)																
Pro-Kit (Performance Fahrwerksfedern | *Performance Springs*)																
2.0	11.05 -	1135	1040	E10-46-013-01-22	A, 18, 20			30	30					F11-46-013-01-VA	F11-46-013-01-HA	T
2.0 CRDi, 2.7, 2.7 V6	11.05 -	1135	1040	E10-46-013-02-22	A, 18, 20			30	30					F11-46-013-02-VA	F11-46-013-01-HA	T
OPTIMA																
Pro-Kit (Performance Fahrwerksfedern | *Performance Springs*)																
1.7 CRDi, 2.0, 2.0 CVVL	03.12 -	1200	1010	E10-42-029-01-22	A, 18, 20			30	30					F11-42-024-05-VA	F11-46-020-02-HA	T
PICANTO (TA)																
Pro-Kit (Performance Fahrwerksfedern | *Performance Springs*)																
1.0, 1.2	05.11 -	720	720	E10-46-009-03-22	A, 18, 20			25	25					F11-46-009-03-VA	F11-46-009-03-HA	T
PRO CEE'D (ED)																
Pro-Kit (Performance Fahrwerksfedern | *Performance Springs*)																
1.4, 1.6, 2.0	02.08 - 12.09	1010	940	E10-46-015-01-22	A, 18, 20			25	25					F11-46-015-01-VA	F11-46-015-01-HA	T
1.6 CRDi 115, 2.0 CRDi 140	02.08 - 12.09	1090	940	E10-46-015-02-22	A, 18, 20			25	25					F11-46-015-02-VA	F11-46-015-01-HA	T
1.4, 1.4 CVVT, 1.6, 1.6 CVVT, 2.0	01.10 -	1010	940	E10-46-015-05-22	A, 18, 20, 63			25	25					F11-42-016-05-VA	F11-46-015-01-HA	T
1.6 CRDi 115, 1.6 CRDi 128, 2.0 CRDi 140	01.10 -	1090	940	E10-46-015-06-22	A, 18, 20, 63			25	25					F11-42-016-06-VA	F11-46-015-01-HA	T

Modell *Model*	Baujahr *Year*	Achslast Vorne kg *Front Axle Load kg*	Achslast Hinten kg *Rear Axle Load kg*	Artikel-Nr. *Part-No.*	Hinweise *Notes*	ab Nachtrag ...xx BE *from suppl. ...xx of type approval*	bis Nachtrag ...xx BE *to suppl. ...xx of type approval*	ca. Tieferl. Vorne mm *ca. Lowering Front mm*	ca. Tieferl. Hinten mm *ca. Lowering Rear mm*	Ø Vorne mm *Ø Front mm*	Ø Hinten mm *Ø Rear mm*	Verstellbarkeit Vorne *Adjustable Front*	Verstellbarkeit Hinten *Adjustable Rear*	Ersatzteilbez. Vorne *Spare Part Marking Front*	Ersatzteilbez. Hinten *Spare Part Marking Rear*	Gutachten *Homologation*
PRO CEE'D (ED)																
B12 Pro-Kit (Performance Komplettfahrwerke | *Performance Springs+Shocks*)																
1.4, 1.6, 2.0	02.08 - 12.09	1010	940	E90-46-015-01-22	A, 18, 20, 78, 161			25	25					F11-46-015-01-VA	F11-46-015-01-HA	T
1.6 CRDi 115, 2.0 CRDi 140	02.08 - 12.09	1090	940	E90-46-015-02-22	A, 18, 20, 78, 161			25	25					F11-46-015-02-VA	F11-46-015-01-HA	T
1.4, 1.4 CVVT, 1.6, 1.6 CVVT, 2.0	01.10 -	1010	940	E90-46-015-05-22	A, 18, 20, 63, 78, 161			25	25					F11-42-016-05-VA	F11-46-015-01-HA	T
1.6 CRDi 115, 1.6 CRDi 128, 2.0 CRDi 140	01.10 -	1090	940	E90-46-015-06-22	A, 18, 20, 63, 78, 161			25	25					F11-42-016-06-VA	F11-46-015-01-HA	T
PRO CEE'D																
Pro-Kit (Performance Fahrwerksfedern | *Performance Springs*)																
1.6 GT	06.13 -	1050	960	E10-46-025-01-22	A, 18, 20			10	10					F11-46-025-01-VA	F11-46-025-01-HA	T
1.4 CVVT, 1.6 GDI	03.13 -	1050	960	E10-46-025-01-22	A, 18, 20			25	20					F11-46-025-01-VA	F11-46-025-01-HA	T
1.4 CRDi, 1.6 CRDi, 1.6 CRDi 136	03.13 -	1050	960	E10-46-025-02-22	A, 18, 20			25	20					F11-42-024-01-VA	F11-46-025-01-HA	T
RIO III (UB)																
Pro-Kit (Performance Fahrwerksfedern | *Performance Springs*)																
1.1 CRDi, 1.4 CRDi	09.11 -	945	840	E10-46-023-02-22	A, 18, 20			25	25					F11-42-025-02-VA	F11-46-023-01-HA	T
1.25 CVVT, 1.4 CVVT, 1.6 CVVT	09.11 -	945	840	E10-46-023-01-22	A, 18, 20			25	25					F11-46-023-01-VA	F11-46-023-01-HA	T
RIO III Stufenheck (UB) ***RIO III Saloon (UB)***																
Pro-Kit (Performance Fahrwerksfedern | *Performance Springs*)																
1.25 CVVT, 1.4 CVVT	10.11 -	945	840	E10-46-023-01-22	A, 18, 20			25	25					F11-46-023-01-VA	F11-46-023-01-HA	T
SORENTO I (JC)																
Pro-Lift-Kit (Performance Höherlegung | *Performance Lift Springs*)																
2.4, 3.3 V6, 3.5 V6, 2.5 CRDi	08.02 -	1350	1500	E30-46-006-01-22	A, 18, 185			+30	+30					F31-46-006-01-VA	F31-46-006-01-HA	T
2.4, 3.3 V6, 3.5 V6, 2.5 CRDi	08.02 -	1350	1500	E30-46-006-02-22	A, 18, 186			+30	+30					F31-46-006-01-VA	F31-46-006-02-HA	
SORENTO II (XM + XMFL)																
Pro-Kit (Performance Fahrwerksfedern | *Performance Springs*)																
2.4, 2.4 AWD, 2.4 CVVT, 2.4 CVVT 4WD, 2.4 GDI, 2.4 GDI 4WD, 3.3, 3.3 GDI, 3.3 4WD, 3.3 GDI 4WD, 3.5, 3.5 4WD, 2.0 CRDi, 2.0 CRDi 4WD, 2.2 CRDi, 2.2 CRDi 4WD	11.09 -	1350	1450	E10-46-018-01-22	A, 18			25-30	15-20					F11-46-018-01-VA	F11-46-018-01-HA	T
Pro-Lift-Kit (Performance Höherlegung | *Performance Lift Springs*)																
2.4, 2.4 AWD, 2.4 CVVT, 2.4 CVVT 4WD, 2.4 GDI, 2.4 GDI 4WD, 3.3, 3.3 GDI, 3.3 4WD, 3.3 GDI 4WD, 3.5, 3.5 4WD, 2.0 CRDi, 2.0 CRDi 4WD, 2.2 CRDi, 2.2 CRDi 4WD	11.09 -	1350	1450	E30-42-031-01-22	A, 18			+25	+25					F31-42-031-01-VA	F31-42-031-01-HA	T
SORENTO III (UM)																
Pro-Kit (Performance Fahrwerksfedern | *Performance Springs*)																
2.0 GDI, 2.0 GDI 4WD, 2.4 GDI, 2.4 GDI 4WD, 2.2 CRDi, 2.2 CRDI 4WD	01.15 -	1350	1450	E10-46-028-01-22	A, 18			30	10-20					F11-46-028-01-FA	F11-46-028-01-RA	T
Pro-Lift-Kit (Performance Höherlegung | *Performance Lift Springs*)																
2.0 GDI, 2.0 GDI 4WD, 2.4 GDI, 2.4 GDI 4WD, 2.2 CRDi, 2.2 CRDI 4WD	01.15 -	1350	1450	E30-46-028-01-22	A, 18			+25	+35					F31-46-028-01-FA	F31-46-028-01-RA	T
SPORTAGE (JE_)																
Pro-Kit (Performance Fahrwerksfedern | *Performance Springs*)																
2.0 16V 4WD, 2.0 CRDi, 2.0 CRDi 4WD, 2.0 i 16V, 2.7 V6 4WD	09.04 -	1220	1200	E10-46-010-01-22	A, 18			30	30					F11-42-010-01-VA	F11-42-010-01-HA	T
SPORTAGE (SL)																
Pro-Kit (Performance Fahrwerksfedern | *Performance Springs*)																
1.7 CRDi, 2.0 CRDi	07.10 -	1200	1090	E10-42-024-04-22	A, 18, 20			30	25					F11-42-024-02-VA	F11-46-013-01-HA	T
2.0 CRDi AWD	07.10 -	1200	1090	E10-42-024-02-22	A, 18			30	25					F11-42-024-02-VA	F11-42-024-01-HA	T
1.6 GDI, 2.0, 2.0 CVVT, 2.0 GDI, 2.0 CWT	07.10 -	1200	1090	E10-42-024-03-22	A, 18, 20			30	25					F11-42-024-01-VA	F11-46-013-01-HA	T
2.0 AWD, 2.0 GDI AWD, 2.0 CWT AWD	07.10 -	1200	1090	E10-42-024-01-22	A, 18			30	25					F11-42-024-01-VA	F11-42-024-01-HA	T
Pro-Lift-Kit (Performance Höherlegung | *Performance Lift Springs*)																
1.6 GDI, 2.0, 2.0 CVVT, 2.0 GDI, 2.0 CWT	07.10 -	1200	1090	E30-42-024-01-22	A, 10, 18, 20			+25	+25					F31-42-024-01-VA	F31-42-024-01-HA	T
2.0 AWD, 2.0 GDI AWD, 2.0 CWT AWD	07.10 -	1200	1090	E30-42-024-02-22	A, 18			+25	+25					F31-42-024-01-VA	F31-42-024-02-HA	T
1.7 CRDi, 2.0 CRDi	07.10 -	1200	1090	E30-42-024-03-22	A, 10, 18, 20			+25	+25					F31-42-024-03-VA	F31-42-024-01-HA	T
2.0 CRDi AWD	07.10 -	1200	1090	E30-42-024-04-22	A, 18			+25	+25					F31-42-024-03-VA	F31-42-024-02-HA	T
VENGA (YN)																
Pro-Kit (Performance Fahrwerksfedern | *Performance Springs*)																
1.4 CRDi 75, 1.4 CRDi 90, 1.4 CVVT, 1.6 CRDi 115, 1.6 CRDi 128, 1.6 CVVT	02.10 -	1030	970	E10-46-019-01-22	A, 18, 20			30	15					F11-46-019-01-VA	F11-46-019-01-HA	T
110																
Pro-Kit (Performance Fahrwerksfedern | *Performance Springs*)																
1.5, 1.5 16V, 2.0 i	01.95 -	800	850	E10-47-001-01-22	A, 18, 20			30	30					F11-47-001-01-VA	F11-47-001-01-HA	E
Sportline (Performance Fahrwerksfedern Sport | *Sport Performance Springs*)																
1.5, 1.5 16V, 2.0 i	01.95 -	800	850	E20-47-001-01-22	A, 18, 20			45-50	45-50					F21-47-001-01-VA	F21-47-001-01-HA	E
111																
Pro-Kit (Performance Fahrwerksfedern | *Performance Springs*)																
1.5, 1.5 16V, 2.0 i	01.95 -	800	850	E10-47-001-01-22	A, 18, 20			30	30					F11-47-001-01-VA	F11-47-001-01-HA	E
Sportline (Performance Fahrwerksfedern Sport | *Sport Performance Springs*)																
1.5, 1.5 16V, 2.0 i	01.95 -	800	850	E20-47-001-01-22	A, 18, 20			45-50	45-50					F21-47-001-01-VA	F21-47-001-01-HA	E
112																
Pro-Kit (Performance Fahrwerksfedern | *Performance Springs*)																
1.5, 1.5 16V, 2.0 i	01.95 -	800	850	E10-47-001-01-22	A, 18, 20			30	30					F11-47-001-01-VA	F11-47-001-01-HA	E
Sportline (Performance Fahrwerksfedern Sport | *Sport Performance Springs*)																
1.5, 1.5 16V, 2.0 i	01.95 -	800	850	E20-47-001-01-22	A, 18, 20			45-50	45-50					F21-47-001-01-VA	F21-47-001-01-HA	E

LADA

Modell *Model*	Baujahr *Year*	Achslast Vorne kg *Front Axle Load kg*	Achslast Hinten kg *Rear Axle Load kg*	Artikel-Nr. *Part-No.*	Hinweise *Notes*	ab Nachtrag ...xx BE *from suppl. ...xx of type approval*	bis Nachtrag ...xx BE *to suppl. ...xx of type approval*	ca. Tieferl. Vorne mm *ca. Lowering Front mm*	ca. Tieferl. Hinten mm *ca. Lowering Rear mm*	Ø Vorne mm *Ø Front mm*	Ø Hinten mm *Ø Rear mm*	Verstellbarkeit Vorne *Adjustable Front*	Verstellbarkeit Hinten *Adjustable Rear*	Ersatzteilbez. Vorne *Spare Part Marking Front*	Ersatzteilbez. Hinten *Spare Part Marking Rear*	Gutachten *Homologation*
KALINA Kombi (1117) ***KALINA Estate (1117)***																
Pro-Kit (Performance Fahrwerksfedern | *Performance Springs*)																
1.4 16V	11.08 -	820	850	E10-47-004-01-22	A, 18, 20			30	30					F11-47-005-01-VA	F11-47-001-01-HA	T
KALINA Schrägheck (1119) ***KALINA Hatchback (1119)***																
Pro-Kit (Performance Fahrwerksfedern | *Performance Springs*)																
1.4 16V	11.08 -	820	850	E10-47-004-01-22	A, 18, 20			30	30					F11-47-005-01-VA	F11-47-001-01-HA	T
KALINA Stufenheck (1118) ***KALINA Saloon (1118)***																
Pro-Kit (Performance Fahrwerksfedern | *Performance Springs*)																
1.4 16V	11.08 -	820	850	E10-47-004-01-22	A, 18, 20			30	30					F11-47-005-01-VA	F11-47-001-01-HA	T
PRIORA Kombi (2171) ***PRIORA Estate (2171)***																
Pro-Kit (Performance Fahrwerksfedern | *Performance Springs*)																
1.6	10.09 -	820	835	E10-47-005-01-22	A, 18, 20			30	0					F11-47-005-01-VA	F11-47-005-01-HA	T
Sportline (Performance Fahrwerksfedern Sport | *Sport Performance Springs*)																
1.6	10.0 -			E20-47-005-01-22	A, 18, 20, 210			45	15					F21-47-005-01-VA	F21-47-005-01-HA	E
PRIORA Schrägheck (2172) ***PRIORA Hatchback (2172)***																
Pro-Kit (Performance Fahrwerksfedern | *Performance Springs*)																
1.6	12.08 -	820	835	E10-47-005-01-22	A, 18, 20			30	0					F11-47-005-01-VA	F11-47-005-01-HA	T
Sportline (Performance Fahrwerksfedern Sport | *Sport Performance Springs*)																
1.6	12.08 -			E20-47-005-01-22	A, 18, 20, 210			45	15					F21-47-005-01-VA	F21-47-005-01-HA	E
PRIORA Stufenheck (2170) ***PRIORA Saloon (2170)***																
Pro-Kit (Performance Fahrwerksfedern | *Performance Springs*)																
1.6	12.08 -	820	835	E10-47-005-01-22	A, 18, 20			30	0					F11-47-005-01-VA	F11-47-005-01-HA	T
Sportline (Performance Fahrwerksfedern Sport | *Sport Performance Springs*)																
1.6	12.08 -			E20-47-005-01-22	A, 18, 20, 210			45	15					F21-47-005-01-VA	F21-47-005-01-HA	E
SAMARA (2108, 2109)																
Pro-Kit (Performance Fahrwerksfedern | *Performance Springs*)																
1.5, 1100, 1300, 1500	01.86 -	800	850	E10-47-001-02-22	A, 18, 20			30	30					F11-47-001-02-VA	F11-47-001-02-HA	E
Sportline (Performance Fahrwerksfedern Sport | *Sport Performance Springs*)																
1.5, 1100, 1300, 1500	01.86 -	800	850	E20-47-001-02-22	A, 18, 20			45-50	45-50					F21-47-001-02-VA	F21-47-001-02-HA	E
SAMARA FORMA (21099)																
Pro-Kit (Performance Fahrwerksfedern | *Performance Springs*)																
1.5, 1100, 1300, 1500	05.89 -	800	850	E10-47-001-02-22	A, 18, 20			30	30					F11-47-001-02-VA	F11-47-001-02-HA	E
Sportline (Performance Fahrwerksfedern Sport | *Sport Performance Springs*)																
1.5, 1100, 1300, 1500	05.89 -	800	850	E20-47-001-02-22	A, 18, 20			45-50	45-50					F21-47-001-02-VA	F21-47-001-02-HA	E

LANCIA

DELTA I (831AB0)																
Pro-Kit (Performance Fahrwerksfedern | *Performance Springs*)																
2.0 16V HF Integrale, 2.0 HF Integrale	11.86 - 12.92	930	930	E4901-140	A, 18			25	25					F4901001	F4901002	T
2.0 16V HF Evo Integrale	06.93 - 01.94	1030	1030	E4909-140	A, 18			30	30					F4909001	F4909002	T
DELTA II (836)																
Pro-Kit (Performance Fahrwerksfedern | *Performance Springs*)																
2.0 16V Turbo	06.93 - 08.99	1060	1060	E4911-140	A, 18, 20			30	30					F1013101	F1013002	T
DELTA III (844)																
Pro-Kit (Performance Fahrwerksfedern | *Performance Springs*)																
1.4, 1.4 16V	09.08 -	1090	950	E10-49-002-01-22	A, 18, 20			30	30					F11-30-012-01-VA	F11-30-012-01-HA	T
1.6 D Multijet, 1.8, 1.9 D Multijet, 2.0 D Multijet	08.08 -	1150	950	E10-49-002-02-22	A, 18, 20			30	30					F11-30-012-02-VA	F11-30-012-01-HA	T
PHEDRA (179)																
Pro-Kit (Performance Fahrwerksfedern | *Performance Springs*)																
2.0, 2.0 D Multijet, 2.0 JTD, 2.2 D Multijet, 2.2 JTD, 3.0 V6	09.02 - 11.10	1370	1300	E10-70-005-01-22	A, 18, 20			30	10					F3015001	F3015002	T
PRISMA (831AB0)																
Pro-Kit (Performance Fahrwerksfedern | *Performance Springs*)																
2.0 i.e. Allrad *2.0 i.e. All-wheel Drive*	04.86 - 12.89	930	930	E4901-140	A, 18			30-35	30					F4901001	F4901002	T
Y (840A)																
Pro-Kit (Performance Fahrwerksfedern | *Performance Springs*)																
1.1, 1.2, 1.2 16V, 1.4 12V	11.95 - 09.03	850	750	E4915-140	A, 18, 20			30	30					F3013101	F3013002	T
YPSILON (843)																
Pro-Kit (Performance Fahrwerksfedern | *Performance Springs*)																
1.3 D Multijet, 1.3 JTD, 1.4, 1.4 16V	10.03 - 12.11	850	750	E10-49-001-01-22	A, 18, 20			30	30					F3033001	F11-49-001-01-HA	T
YPSILON (846)																
Pro-Kit (Performance Fahrwerksfedern | *Performance Springs*)																
0.9 Twinair, 1.2	05.11 -	800	810	E10-49-004-01-22	A, 18, 20			25	20					F11-49-004-01-VA	F11-49-004-01-HA	T
1.3 Multijet	05.11 -	870	810	E10-49-004-02-22	A, 18, 20			25	20					F11-49-004-02-VA	F11-49-004-01-HA	T
ZETA (220)																
Pro-Kit (Performance Fahrwerksfedern | *Performance Springs*)																
2.0 16V, 2.0 JTD, 2.0 Turbo, 2.1 TD	05.95 - 09.02	1230	1300	E4914-140	A, 18, 20			30	30					F3015001	F3015002	T

LANCIA

LAND ROVER

LEXUS

MAZDA

Modell *Model*	Baujahr *Year*	Achslast Vorne kg *Front Axle Load kg*	Achslast Hinten kg *Rear Axle Load kg*	Artikel-Nr. *Part-No.*	Hinweise *Notes*	ab Nachtrag ...xx BE *from suppl. ...xx of type approval*	bis Nachtrag ...xx BE *to suppl. ...xx of type approval*	ca. Tieferl. Vorne mm *ca. Lowering Front mm*	ca. Tieferl. Hinten mm *ca. Lowering Rear mm*	Ø Vorne mm *Ø Front mm*	Ø Hinten mm *Ø Rear mm*	Verstellbarkeit Vorne *Adjustable Front*	Verstellbarkeit Hinten *Adjustable Rear*	Ersatzteilbez. Vorne *Spare Part Marking Front*	Ersatzteilbez. Hinten *Spare Part Marking Rear*	Gutachten *Homologation*
RANGE ROVER EVOQUE (LV)																
Pro-Kit (Performance Fahrwerksfedern | *Performance Springs*)																
2.0 4x4, 2.2 SD4 4x4, 2.2 TD4 4x4, 2.2 eD4	06.11 -	1300	1145	E10-47-006-02-22	A, 18			20	25					F11-47-006-02-VA	F11-47-006-02-HA	T
B12 Pro-Kit (Performance Komplettfahrwerke | *Performance Springs+Shocks*)																
2.0 4x4, 2.2 SD4 4x4, 2.2 TD4 4x4, 2.2 eD4	06.11 -	1300	1145	E90-47-006-02-22	A, 18, 78, 161			20	25					F11-47-006-02-VA	F11-47-006-02-HA	T
DISCOVERY SPORT (LC)																
Pro-Kit (Performance Fahrwerksfedern | *Performance Springs*)																
2.0 4WD, 2.0 D 4WD, 2.2 D 4WD	12.14 -	1340	1310	E10-71-007-01-22	A, 18			30	35					F11-71-007-01-FA	F11-47-007-01-RA	T
CT (ZWA1_)																
Pro-Kit (Performance Fahrwerksfedern | *Performance Springs*)																
200h	12.10 -	1020	980	E10-82-039-01-22	A, 18, 20			20	20					F11-82-024-05-VA	F11-82-021-01-HA	T
IS I (JCE1_, GXE1_)																
Pro-Kit (Performance Fahrwerksfedern | *Performance Springs*)																
200	04.99 - 07.05	1195	1135	E8259-140	A, 12, 18, 20			30	30					F8259001	F8259002	T
IS II (GSE2_, ALE2_, USE2_)																
Pro-Kit (Performance Fahrwerksfedern | *Performance Springs*)																
200d, 220 d, 250	10.05 - 03.13	1090	1150	E10-82-009-05-22	A, 18, 20			30	30					F11-82-009-05-VA	F11-82-009-05-HA	T
RX (MHU3_, GSU3_, MCU3_)																
Pro-Kit (Performance Fahrwerksfedern | *Performance Springs*)																
3.3, 3.3 AWD, 300, 350 AWD, 400h, 400h AWD	04.03 - 12.08	1300	1350	E10-82-004-02-22	A, 18			30	30					F11-82-004-02-VA	F11-82-004-01-HA	T
2 (DY)																
Pro-Kit (Performance Fahrwerksfedern | *Performance Springs*)																
1.2, 1.25, 1.3 L, 1.4, 1.4 CD, 1.5, 1.6	02.03 -	855	815	E10-55-005-01-22	A, 18, 20			30	30					F11-35-010-02-VA	F11-35-010-01-HA	T
2 (DE)																
Pro-Kit (Performance Fahrwerksfedern | *Performance Springs*)																
1.3, 1.3 MZR, 1.5, 1.5 MZR	10.07 -	795	755	E10-55-011-01-22	A, 18, 20, 163			30	30					F11-55-011-01-VA	F11-55-011-01-HA	T
1.3, 1.3 MZR, 1.5, 1.5 MZR, 1.4 MZR-CD, 1.6 MZ-CD	01.08 -	850	755	E10-55-011-02-22	A, 18, 20			30	30					F11-55-011-02-VA	F11-55-011-01-HA	T
Pro-Street-S (Gewindefahrwerke - höhenverstellbar | *Coil-Overs-Adjustable Ride Hight*)																
1.3, 1.3 MZR, 1.5, 1.5 MZR, 1.4 MZR-CD, 1.6 MZ-CD	10.07 -	850	765	PSS65-35-020-01-22	A, 18, 20, 24, 25, 45, 160			25-50	30-45							T
2 (DL, DJ)																
Pro-Kit (Performance Fahrwerksfedern | *Performance Springs*)																
1.3, 1.5	11.14 -	830	797	E10-55-017-01-22	A, 18, 20			20	20					F11-55-017-01-FA	F11-55-017-01-RA	T
1.5 D	11.14 -	897	797	E10-55-017-02-22	A, 18, 20			20	20					F11-55-017-02-FA	F11-55-017-01-RA	T
2 Stufenheck (DE) ***2 Saloon (DE)***																
Pro-Kit (Performance Fahrwerksfedern | *Performance Springs*)																
1.5 i	10.07 -	850	755	E10-55-011-02-22	A, 18, 20			30	30					F11-55-011-02-VA	F11-55-011-01-HA	T
Pro-Street-S (Gewindefahrwerke - höhenverstellbar | *Coil-Overs-Adjustable Ride Hight*)																
1.5 i	05.10 -	850	765	PSS65-35-020-01-22	A, 18, 20, 24, 25, 45, 160			25-50	30-45							T
3 (BK)																
Pro-Kit (Performance Fahrwerksfedern | *Performance Springs*)																
1.4, 1.6, 2.0	10.03 - 06.09	955	915	E10-55-008-01-22	A, 18, 20			30	30					F11-55-008-01-VA	F3587002	T
1.6 DI Turbo	06.04 - 06.09	995	915	E10-55-008-02-22	A, 18, 20			30	30					F11-55-008-02-VA	F3587002	T
2.3 DiSi Turbo MPS, 2.3 MPS	06.06 - 06.09	1070	915	E10-55-008-05-22	A, 18, 20			25	15					F11-55-008-05-VA	F3587002	T
2.0 MZR-CD	12.06 - 06.09	1110	915	E10-55-008-07-22	A, 18, 20			25	25					F11-35-014-02-VA	F3587002	T
B12 Pro-Kit (Performance Komplettfahrwerke | *Performance Springs+Shocks*)																
1.4, 1.6, 2.0	10.03 - 06.09	955	915	E90-55-008-01-22	A, 18, 20, 78, 161			30	30					F11-55-008-01-VA	F3587002	T
1.6 DI Turbo	06.04 - 06.09	955	915	E90-55-008-02-22	A, 18, 20, 78, 161			30	30					F11-55-008-02-VA	F3587002	T
2.3 DiSi Turbo MPS, 2.3 MPS, 2.3 MZR, 2.3 MZR Sport	10.03 - 06.09	1070	915	E90-55-008-05-22	A, 18, 20, 78, 161			25	15					F11-55-008-05-VA	F3587002	T
3 (BL)																
Pro-Kit (Performance Fahrwerksfedern | *Performance Springs*)																
1.6 MZR	06.09 -	925	925	E10-55-013-01-22	A, 18, 20			30	30					F11-55-008-01-VA	F11-55-013-01-HA	T
1.6 MZR-CD, 2.0 MZR, 2.0 MZR DISI	06.09 -	1005	925	E10-55-013-02-22	A, 18, 20			30	30					F11-55-008-02-VA	F11-55-013-01-HA	T
2.3 MPS Turbo	06.09 -	1075	925	E10-55-013-03-22	A, 18, 20			25	15					F11-55-008-05-VA	F11-55-013-01-HA	T
2.2 MZR-CD, 2.5	06.09 -	1135	925	E10-55-013-04-22	A, 18, 20			25	15					F11-35-014-02-VA	F11-55-013-01-HA	T

MAZDA

Modell	Baujahr	Achslast Vorne kg	Achslast Hinten kg	Artikel-Nr.	Hinweise	ab Nachtrag ...xx BE	bis Nachtrag ...xx BE	ca. Tieferl. Vorne mm	ca. Tieferl. Hinten mm	Ø Vorne mm	Ø Hinten mm	Verstellbarkeit Vorne	Verstellbarkeit Hinten	Ersatzteilbez. Vorne	Ersatzteilbez. Hinten	Gutachten
Model	*Year*	*Front Axle Load kg*	*Rear Axle Load kg*	*Part-No.*	*Notes*	*from suppl. ...xx of type approval*	*to suppl. ...xx of type approval*	*ca. Lowering Front mm*	*ca. Lowering Rear mm*	*Ø Front mm*	*Ø Rear mm*	*Adjustable Front*	*Adjustable Rear*	*Spare Part Marking Front*	*Spare Part Marking Rear*	*Homologation*
3 (BL)																
B12 Pro-Kit (Performance Komplettfahrwerke | *Performance Springs+Shocks*)																
1.6 MZR	06.09 -	925	925	E90-55-013-01-22	A, 18, 20, 78, 161			30	30					F11-55-008-01-VA	F11-55-013-01-HA	T
1.6 MZR-CD, 2.0 MZR, 2.0 MZR DISI	06.09 -	1005	925	E90-55-013-02-22	A, 18, 20, 78, 161			30	30					F11-55-008-02-VA	F11-55-013-01-HA	T
2.3 MPS Turbo	06.09 -	1075	925	E90-55-013-03-22	A, 18, 20, 78, 161			25	15					F11-55-008-05-VA	F11-55-013-01-HA	T
2.2 MZR-CD, 2.5	06.09 -	1135	925	E90-55-013-04-22	A, 18, 20, 78, 161			25	15					F11-35-014-02-VA	F11-55-013-01-HA	T
3 (BM)																
Pro-Kit (Performance Fahrwerksfedern | *Performance Springs*)																
1.5, 1.6, 2.0	09.13 -	980	945	E10-55-016-01-22	A, 18, 20			30	30					F11-55-016-01-VA	F11-55-016-01-HA	T
2.2 D	09.13 -	1075	945	E10-55-016-02-22	A, 18, 20			30	30					F11-55-016-02-VA	F11-55-016-01-HA	T
3 Stufenheck (BK)																
3 Saloon (BK)																
Pro-Kit (Performance Fahrwerksfedern | *Performance Springs*)																
1.6, 2.0	02.04 -	955	915	E10-55-008-01-22	A, 18, 20			30	30					F11-55-008-01-VA	F3587002	T
1.6 DI Turbo	06.04 -	995	915	E10-55-008-02-22	A, 18, 20			30	30					F11-55-008-02-VA	F3587002	T
2.3	06.00 - 03.09	1070	915	E10-55-008-05-22	A, 18, 20			25	15					F11-55-008-05-VA	F3587002	T
2.0 MZR-CD	12.06 -	1110	915	E10-55-008-07-22	A, 18, 20			25	25					F11-35-014-02-VA	F3587002	T
B12 Pro-Kit (Performance Komplettfahrwerke | *Performance Springs+Shocks*)																
1.6, 2.0	02.04 -	955	915	E90-55-008-01-22	A, 18, 20, 78, 161			30	30					F11-55-008-01-VA	F3587002	T
1.6 DI Turbo	06.04 -	955	915	E90-55-008-02-22	A, 18, 20, 78, 161			30	30					F11-55-008-02-VA	F3587002	T
2.3	06.00 - 03.09	1070	915	E90-55-008-05-22	A, 18, 20, 78, 161			25	15					F11-55-008-05-VA	F3587002	T
3 Stufenheck (BL)																
3 Saloon (BL)																
Pro-Kit (Performance Fahrwerksfedern | *Performance Springs*)																
1.6 MZR	06.09 -	925	925	E10-55-013-01-22	A, 18, 20			30	30					F11-55-008-01-VA	F11-55-013-01-HA	T
2.0 MZR, 2.0 MZR DISI, 1.6 MZR CD	06.09 -	1005	925	E10-55-013-02-22	A, 18, 20			30	30					F11-55-008-02-VA	F11-55-013-01-HA	T
2.2 MZR-CD	06.09 -	1135	925	E10-55-013-04-22	A, 18, 20			25	15					F11-35-014-02-VA	F11-55-013-01-HA	T
B12 Pro-Kit (Performance Komplettfahrwerke | *Performance Springs+Shocks*)																
1.6 MZR	06.09 -	925	925	E90-55-013-01-22	A, 18, 20, 78, 161			30	30					F11-55-008-01-VA	F11-55-013-01-HA	T
2.0 MZR, 2.0 MZR DISI, 1.6 MZR CD	06.09 -	1005	925	E90-55-013-02-22	A, 18, 20, 78, 161			30	30					F11-55-008-02-VA	F11-55-013-01-HA	T
2.2 MZR-CD	06.09 -	1135	925	E90-55-013-04-22	A, 18, 20, 78, 161			25	15					F11-35-014-02-VA	F11-55-013-01-HA	T
3 Stufenheck (BM)																
3 Saloon (BM)																
Pro-Kit (Performance Fahrwerksfedern | *Performance Springs*)																
1.5, 1.6, 2.0	09.13 -	980	945	E10-55-016-01-22	A, 18, 20			30	30					F11-55-016-01-VA	F11-55-016-01-HA	T
2.2 D	09.13 -	1075	945	E10-55-016-02-22	A, 18, 20			30	30					F11-55-016-02-VA	F11-55-016-01-HA	T
5 (CR19)																
Pro-Kit (Performance Fahrwerksfedern | *Performance Springs*)																
1.8, 2.0	03.05 -	1035	1205	E10-55-009-01-22	A, 18, 20			30	30-35					F11-35-014-01-VA	F11-55-009-01-HA	T
2.0 CD	03.05 -	1130	1205	E10-55-009-02-22	A, 18, 20			30	30-35					F11-35-014-02-VA	F11-55-009-01-HA	T
5 (CW)																
Pro-Kit (Performance Fahrwerksfedern | *Performance Springs*)																
1.8 MZR, 2.0	09.10 -	1035	1205	E10-55-009-01-22	A, 18, 20			30	30-35					F11-35-014-01-VA	F11-55-009-01-HA	T
1.6 CD	09.10 -	1130	1205	E10-55-009-02-22	A, 18, 20			30	30-35					F11-35-014-02-VA	F11-55-009-01-HA	T
6 (GG)																
Pro-Kit (Performance Fahrwerksfedern | *Performance Springs*)																
1.8, 2.0, 2.3, 2.3 MPS Turbo, bis Fahrgestellnr.: 600000 *1.8, 2.0, 2.3, 2.3 MPS Turbo, to chassis no.: 600000*	06.02 - 08.07	1040	1010	E10-55-004-01-22	A, 18			30	30					F11-55-004-01-VA	F11-55-004-01-HA	T
1.8, 2.0, ab Fahrgestell-Nr.: 600001 *1.8, 2.0, beginning chasis-no.: 600001*	06.02 - 08.07	1050	1010	E10-55-004-09-22	A, 18, 20			30	30					F11-55-004-09-VA	F11-55-004-01-HA	T
2.0 DI bis Fahrgestellnr.: 600000 *2.0 DI to chassis no.: 600000*	06.02 - 08.07	1095	1010	E10-55-004-03-22	A, 18, 20			30	30					F11-55-004-03-VA	F11-55-004-01-HA	T
2.0 DI ab Fahrgestell-Nr.: 600001 *2.0 DI beginning chasis-no.: 600001*	06.02 - 08.07	1135	1010	E10-55-004-11-22	A, 18, 20			30	30					F11-55-004-01-VA	F11-55-004-01-HA	T
2.3 T MPS	10.05 - 08.07	1135	1100	E10-55-004-04-22	A, 18			30	30					F11-55-004-03-VA	F11-55-004-02-HA	T
B12 Pro-Kit (Performance Komplettfahrwerke | *Performance Springs+Shocks*)																
1.8, 2.0, 2.3, bis Fahrgestellnr.: 600000 *1.8, 2.0, 2.3, to chassis no.: 600000*	06.02 - 02.05	1040	1010	E90-55-004-01-22	A, 18, 20, 78, 161			30	30					F11-55-004-01-VA	F11-55-004-01-HA	T
2.0 DI, bis Fahrgestellnr.: 600000 *2.0 DI, to chassis no.: 600000*	06.02 - 02.05	1095	1010	E90-55-004-03-22	A, 18, 20, 78, 161			30	30					F11-55-004-03-VA	F11-55-004-01-HA	T
6 (GH)																
Pro-Kit (Performance Fahrwerksfedern | *Performance Springs*)																
1.8 MZR, 2.0 MZR, 2.5 MZR	08.07 -	1060	1040	E10-55-012-01-22	A, 18, 20			30	30					F11-55-012-01-VA	F11-55-012-01-HA	T
2.0 MZR-CD, 2.2 D, 2.2 MZR-CD	08.07 -	1180	1040	E10-55-012-02-22	A, 18, 20			30	30					F11-55-012-02-VA	F11-55-012-01-HA	T
6 Sport (GH)																
Pro-Kit (Performance Fahrwerksfedern | *Performance Springs*)																
1.8 MZR, 2.0 MZR, 2.5 MZR	08.07 -	1060	1040	E10-55-012-01-22	A, 18, 20			30	30					F11-55-012-01-VA	F11-55-012-01-HA	T
2.0 D, 2.0 MZR-CD, 2.2 D, 2.2 MZR-CD	08.07 -	1180	1040	E10-55-012-02-22	A, 18, 20			30	30					F11-55-012-02-VA	F11-55-012-01-HA	T

MAZDA

Modell	Baujahr	Achslast Vorne kg	Achslast Hinten kg	Artikel-Nr.	Hinweise	ab Nachtrag ...xx BE	bis Nachtrag ...xx BE	ca. Tieferl. Vorne mm	ca. Tieferl. Hinten mm	Ø Vorne mm	Ø Hinten mm	Verstellbarkeit Vorne	Verstellbarkeit Hinten	Ersatzteilbez. Vorne	Ersatzteilbez. Hinten	Gutachten
Model	*Year*	*Front Axle Load kg*	*Rear Axle Load kg*	*Part-No.*	*Notes*	*from suppl. ...xx of type approval*	*to suppl. ...xx of type approval*	*ca. Lowering Front mm*	*ca. Lowering Rear mm*	*Ø Front mm*	*Ø Rear mm*	*Adjustable Front*	*Adjustable Rear*	*Spare Part Marking Front*	*Spare Part Marking Rear*	*Homologation*
6 Hatchback (GG)																
Pro-Kit (Performance Fahrwerksfedern | *Performance Springs*)																
1.8, 2.0, 2.3, bis Fahrgestellnr.: 600000 *1.8, 2.0, 2.3, to chassis no.: 600000*	08.02 - 08.07	1040	1010	E10-55-004-01-22	A, 18			30	30					F11-55-004-01-VA	F11-55-004-01-HA	T
1.8, 2.0, ab Fahrgestell-Nr.: 600001 *1.8, 2.0, beginning chasis-no.: 600001*	08.02 - 08.07	1050	1010	E10-55-004-09-22	A, 18, 20			30	30					F11-55-004-09-VA	F11-55-004-01-HA	T
2.0 DI bis Fahrgestellnr.: 600000 *2.0 DI to chassis no.: 600000*	08.02 - 08.07	1095	1010	E10-55-004-03-22	A, 18, 20			30	30					F11-55-004-03-VA	F11-55-004-01-HA	T
2.0 DI ab Fahrgestell-Nr.: 600001 *2.0 DI beginning chasis-no.: 600001*	08.02 - 08.07	1135	1010	E10-55-004-11-22	A, 18, 20			30	30					F11-55-004-01-VA	F11-55-004-01-HA	T
B12 Pro-Kit (Performance Komplettfahrwerke | *Performance Springs+Shocks*)																
1.8, 2.0, 2.3, bis Fahrgestellnr.: 600000 *1.8, 2.0, 2.3, to chassis no.: 600000*	08.02 - 02.05	1040	1010	E90-55-004-01-22	A, 18, 20, 78, 161			30	30					F11-55-004-01-VA	F11-55-004-01-HA	T
2.0 DI, bis Fahrgestellnr.: 600000 *2.0 DI, to chassis no.: 600000*	08.02 - 02.05	1095	1010	E90-55-004-03-22	A, 18, 20, 78, 161			30	30					F11-55-004-03-VA	F11-55-004-01-HA	T
6 Kombi (GH) ***6 Estate (GH)***																
Pro-Kit (Performance Fahrwerksfedern | *Performance Springs*)																
1.8 MZR, 2.0 MZR, 2.5 MZR	02.08 -	1060	1090	E10-55-012-05-22	A, 18, 20			30	30					F11-55-012-01-VA	F11-55-012-05-HA	T
2.0 MZR-CD, 2.2 D, 2.2 MRZ-CD, 2.2 MZR-CD	02.08 -	1180	1090	E10-55-012-06-22	A, 18, 20			30	30					F11-55-012-02-VA	F11-55-012-05-HA	T
6 Sport Kombi (GH) ***6 Estate (GH)***																
Pro-Kit (Performance Fahrwerksfedern | *Performance Springs*)																
1.8 MZR, 2.0 MZR, 2.5 MZR	02.08 -	1060	1090	E10-55-012-05-22	A, 18, 20			30	30					F11-55-012-01-VA	F11-55-012-05-HA	T
2.0 D, 2.0 MZR-CD, 2.2 D, 2.2 MZR-CD	02.08 -	1180	1090	E10-55-012-06-22	A, 18, 20			30	30					F11-55-012-02-VA	F11-55-012-05-HA	T
6 Kombi (GJ, GH) ***6 Estate (GJ, GH)***																
Pro-Kit (Performance Fahrwerksfedern | *Performance Springs*)																
2.0, 2.5	12.12 -	1050	1110	E10-55-015-03-22	A, 18, 20			30	25					F11-55-015-01-VA	F11-55-015-03-HA	T
2.2 D, 2.5	12.12 -	1160	1110	E10-55-015-04-22	A, 18, 20			30	25					F11-55-015-02-VA	F11-55-015-03-HA	T
2.2 D 4WD	03.15 -	1160	1110	E10-55-015-04-22	A, 18			30	30					F11-55-015-02-VA	F11-55-015-03-HA	T
Pro-Lift-Kit (Performance Höherlegung | *Performance Lift Springs*)																
2.2 D 4WD	03.15 -	1160	1110	E30-55-015-01-22	A, 18			+25	+25					F31-55-015-01-FA	F31-55-015-01-RA	T
6 Schrägheck (GH) ***6 Hatchback (GH)***																
Pro-Kit (Performance Fahrwerksfedern | *Performance Springs*)																
1.8 MZR, 2.0 MZR, 2.5 MZR	08.07 -	1060	1040	E10-55-012-01-22	A, 18, 20			30	30					F11-55-012-01-VA	F11-55-012-01-HA	T
2.0 MZR-CD, 2.2 D, 2.2 MZR-CD	08.07 -	1180	1040	E10-55-012-02-22	A, 18, 20			30	30					F11-55-012-02-VA	F11-55-012-01-HA	T
6 Station Wagon (GY)																
Pro-Kit (Performance Fahrwerksfedern | *Performance Springs*)																
1.8 bis Fahrgestellnr.: 400000, 2.0 bis Fahrgestellnr.: 400000, 2.3 bis Fahrgestellnr.: 400000 *1.8 to chassis no.: 400000, 2.0 to chassis no.: 400000, 2.3 to chassis no.: 400000*	08.02 - 08.07	1040	1100	E10-55-004-02-22	A, 18, 20			30	30					F11-55-004-01-VA	F11-55-004-02-HA	T
1.8, 2.0, 2.3, ab Fahrgestellnr.: 400001 *1.8, 2.0, 2.3, from chassis no.: 400001*	08.02 - 08.07	1050	1100	E10-55-004-10-22	A, 18, 20			30-35	30-35					F11-55-004-09-VA	F11-55-004-02-HA	T
2.0 DI bis Fahrgestellnr.: 400000 *2.0 DI to chassis no.: 400000*	08.02 - 08.07	1095	1100	E10-55-004-04-22	A, 18, 20			30	30-35					F11-55-004-03-VA	F11-55-004-02-HA	T
2.0 DI, ab Fahrgestellnr.: 400001 *2.0 DI from chassis no.: 400001*	08.02 - 08.07	1135	1100	E10-55-004-12-22	A, 18, 20			30-35	30-35					F11-55-004-01-VA	F11-55-004-02-HA	T
B12 Pro-Kit (Performance Komplettfahrwerke | *Performance Springs+Shocks*)																
1.8 bis Fahrgestellnr.: 400000, 2.0 bis Fahrgestellnr.: 400000, 2.3 bis Fahrgestellnr.: 400000 *1.8 to chassis no.: 400000, 2.0 to chassis no.: 400000, 2.3 to chassis no.: 400000*	08.02 - 02.05	1040	1100	E90-55-004-02-22	A, 18, 20, 78, 161			30	30					F11-55-004-01-VA	F11-55-004-02-HA	T
2.0 DI bis Fahrgestellnr.: 400000 *2.0 DI to chassis no.: 400000*	08.02 - 02.05	1095	1100	E90-55-004-04-22	A, 18, 20, 78, 161			30	30					F11-55-004-03-VA	F11-55-004-02-HA	T
6 Stufenheck (GJ, GH) ***6 Saloon (GJ, GH)***																
Pro-Kit (Performance Fahrwerksfedern | *Performance Springs*)																
2.0, 2.5	12.12 -	1050	1075	E10-55-015-01-22	A, 18, 20			30	25					F11-55-015-01-VA	F11-55-015-01-HA	T
2.2 D, 2.5	12.12 -	1160	1075	E10-55-015-02-22	A, 18, 20			30	25					F11-55-015-02-VA	F11-55-015-01-HA	T
2.2 D 4WD	03.15 -	1160	1075	E10-55-015-02-22	A, 18			30	30					F11-55-015-02-VA	F11-55-015-01-HA	T
323 C V (BA)																
Pro-Kit (Performance Fahrwerksfedern | *Performance Springs*)																
1.3 16V, 1.5 16V, 1.8 16V	08.94 - 09.98	960	840	E5526-140	A, 18, 20			30	30					F5526001	F5526002	T
323 F V (BA)																
Pro-Kit (Performance Fahrwerksfedern | *Performance Springs*)																
1.5 16V, 1.8 16V, 2.0 24V	07.94 - 09.98	960	840	E5526-140	A, 18, 20			30	30					F5526001	F5526002	T
323 P V (BA)																
Pro-Kit (Performance Fahrwerksfedern | *Performance Springs*)																
1.3 16V, 1.5 16V, 2.0 D	10.96 -	960	840	E5526-140	A, 18, 20			30	30					F5526001	F5526002	T
323 S V (BA)																
Pro-Kit (Performance Fahrwerksfedern | *Performance Springs*)																
1.3 16V, 1.5 16V, 1.6 TD, 1.8, 1.8 16V, 2.0 D	05.94 - 09.98	960	840	E5526-140	A, 18, 20			30	30					F5526001	F5526002	T
CX-3																
Pro-Kit (Performance Fahrwerksfedern | *Performance Springs*)																
2.0, 2.0 AWD, 1.5 D, 1.5 D 4WD	11.15 -	990	923	E10-55-018-02-22	A, 18			30-35	20-25					F11-55-018-02-FA	F11-55-018-02-RA	T

MAZDA

Modell	Baujahr	Achslast Vorne kg	Achslast Hinten kg	Artikel-Nr.	Hinweise	ab Nachtrag ...xx BE	bis Nachtrag ...xx BE	ca. Tieferl. Vorne mm	ca. Tieferl. Hinten mm	Ø Vorne mm	Ø Hinten mm	Verstellbarkeit Vorne	Verstellbarkeit Hinten	Ersatzteilbez. Vorne	Ersatzteilbez. Hinten	Gutachten
Model	*Year*	*Front Axle Load kg*	*Rear Axle Load kg*	*Part-No.*	*Notes*	*from suppl. ...xx of type approval*	*to suppl. ...xx of type approval*	*ca. Lowering Front mm*	*ca. Lowering Rear mm*	*Ø Front mm*	*Ø Rear mm*	*Adjustable Front*	*Adjustable Rear*	*Spare Part Marking Front*	*Spare Part Marking Rear*	*Homologation*
CX-5 (KE, GH)																
Pro-Kit (Performance Fahrwerksfedern | *Performance Springs*)																
2.0, 2.0 AWD	11.11 -	1050	1090	E10-55-014-01-22	A, 18			25	25					F11-55-014-01-VA	F11-55-014-01-HA	T
2.2 D, 2.2 D AWD	04.12 -	1145	1090	E10-55-014-02-22	A, 18			25	25					F11-55-014-02-VA	F11-55-014-01-HA	T
MX-5 I (NA)																
Pro-Kit (Performance Fahrwerksfedern | *Performance Springs*)																
1.6, 1.8	05.90 - 04.98	625	645	E5517-140	A, 18, 20			25	25					F5517001	F5517002	T
MX-5 II (NB)																
Pro-Kit (Performance Fahrwerksfedern | *Performance Springs*)																
1.6 16V, 1.8, 1.8 16V	01.98 - 10.05	655	665	E5530-140	A, 18, 20, 32			25	25					F5530001	F5530002	T
MX-5 III (NC)																
Pro-Kit (Performance Fahrwerksfedern | *Performance Springs*)																
1.8, 2.0	03.05 - 12.08	720	720	E10-55-010-01-22	A, 18, 20			30-35	30					F11-55-010-01-VA	F11-55-010-01-HA	T
1.8, 2.0	01.09 -	720	720	E10-55-010-05-22	A, 18, 20			30-35	30					F11-55-010-05-VA	F11-55-010-05-HA	T
Anti-Roll-Kit (Performance Stabilisatoren | *Performance Sway Bars*)																
1.8, 2.0	03.05 -			E40-55-010-01-11	A, 18, 20, 22, 45					26 Rohr *26 tube*	16	2-fach verstellbar *2-way adjustable*	nicht verstellbar *not adjustable*	AS41-55-010-01-VA	AS41-55-010-01-HA	T
B12 Pro-Kit (Performance Komplettfahrwerke | *Performance Springs+Shocks*)																
1.8, 2.0	03.05 -	720	720	E90-55-010-01-22	A, 18, 20, 78, 161			30-35	30					F11-55-010-01-VA	F11-55-010-01-HA	T
MX-5 IV (ND)																
Pro-Kit (Performance Fahrwerksfedern | *Performance Springs*)																
1.5, 2.0	04.15 -	645	615	E10-55-019-03-22	A, 18, 20			25-30	20					F11-55-019-03-FA	F11-55-019-03-RA	T
Sportline (Performance Fahrwerksfedern Sport | *Sport Performance Springs*)																
1.5, 2.0	04.15 -	645	615	E20-55-019-01-22	A, 18, 20			45	35					F21-55-019-01-FA	F21-55-019-01-RA	
RX 8 (SE17)																
Pro-Kit (Performance Fahrwerksfedern | *Performance Springs*)																
2.6 Wankel	10.03 - 06.12	860	1030	E10-55-007-01-22	A, 18, 20			25-30	25					F11-55-007-01-VA	F11-55-007-01-HA	T
B12 Pro-Kit (Performance Komplettfahrwerke | *Performance Springs+Shocks*)																
2.6 Wankel	10.03 - 06.12	860	1030	E90-55-007-01-22	A, 18, 20, 78, 161			25-30	25					F11-55-007-01-VA	F11-55-007-01-HA	T

MERCEDES-BENZ

Modell *Model*	Baujahr *Year*	Achslast Vorne kg *Front Axle Load kg*	Achslast Hinten kg *Rear Axle Load kg*	Artikel-Nr. *Part-No.*	Hinweise *Notes*	ab Nachtrag ...xx BE *from suppl. ...xx of type approval*	bis Nachtrag ...xx BE *to suppl. ...xx of type approval*	ca. Tieferl. Vorne mm *ca. Lowering Front mm*	ca. Tieferl. Hinten mm *ca. Lowering Rear mm*	Ø Vorne mm *Ø Front mm*	Ø Hinten mm *Ø Rear mm*	Verstellbarkeit Vorne *Adjustable Front*	Verstellbarkeit Hinten *Adjustable Rear*	Ersatzteilbez. Vorne *Spare Part Marking Front*	Ersatzteilbez. Hinten *Spare Part Marking Rear*	Gutachten *Homologation*
190 (W201)																
Pro-Kit (Performance Fahrwerksfedern | *Performance Springs*)																
2.0, 2.3, D 2.0, D 2.5, E 1.8, E 2.0, E 2.3, E 2.3-16, E 2.5-16	10.82 - 08.93	880	940	E2502-140	A, 7, 18, 20, 181			40	30-40					F2502001	F2502002	T
B12 Pro-Kit (Performance Komplettfahrwerke | *Performance Springs+Shocks*)																
2.0, 2.3, D 2.0, D 2.5, E 1.8, E 2.0, E 2.3, E 2.3-16, E 2.5-16	10.82 - 08.93	880	940	E90-25-023-01-22	A, 7, 18, 20, 78, 161, 181			40	30-40					F2502001	F2502002	T
A-KLASSE (W168)																
A-CLASS (W168)																
Pro-Kit (Performance Fahrwerksfedern | *Performance Springs*)																
A 140, A 160, A 160 CDI, A 170 CDI, A 190, A 210	07.97 - 08.04	810	845	E2556-140	A, 7, 18, 20, 181			20	20					F2556101	F2556002	T
B12 Pro-Kit (Performance Komplettfahrwerke | *Performance Springs+Shocks*)																
A 140, A 160, A 160 CDI, A 170 CDI, A 190, A 210	07.97 - 08.04	810	845	E90-25-006-02-22	A, 7, 18, 20, 78, 86 161, 181			20	20					F2556101	F2556002	T
A-KLASSE (W169)																
A-CLASS (W169)																
Pro-Kit (Performance Fahrwerksfedern | *Performance Springs*)																
A 150, A 160, A 170, A 180, A 200	09.04 - 06.12	885	900	E10-25-015-02-22	A, 7, 18, 20, 181			30	25					F11-25-015-02-VA	F11-25-015-01-HA	T
A 160 CDI, A 180 CDI, A 200 CDI, A 200 TURBO	09.04 - 06.12	980	900	E10-25-015-01-22	A, 7, 18, 20, 181			30	25					F11-25-015-01-VA	F11-25-015-01-HA	T
B12 Pro-Kit (Performance Komplettfahrwerke | *Performance Springs+Shocks*)																
A 150, A 160, A 170, A 180, A 200	09.04 - 06.12	885	900	E90-25-015-02-22	A, 7, 18, 20, 78, 161, 181			30	25					F11-25-015-01-VA	F11-25-015-01-HA	T
A 160 CDI, A 180 CDI, A 200 CDI, A 200 TURBO	09.04 - 06.12	980	900	E90-25-015-01-22	A, 7, 18, 20, 78, 161, 181			30	25					F11-25-015-02-VA	F11-25-015-01-HA	T
A-KLASSE (W176)																
A-CLASS (W176)																
Pro-Kit (Performance Fahrwerksfedern | *Performance Springs*)																
A160, A180, A200, A250, A160 CDI, A180 CDI, A200 CDI, A220 CDI, A200 4-matic, A200 CDI 4-matic, A220 CDI 4-matic	06.12 -	1100	975	E10-25-033-01-22	A, 12, 18, 181			30	25					F11-25-031-01-VA	F11-25-031-01-HA	T
A160, A180, A200, A250, A160 CDI, A180 CDI, A200 CDI, A220 CDI, A200 4-matic, A200 CDI 4-matic, A220 CDI 4-matic	06.12 -	1100	975	E10-25-033-02-22	A, 18, 181			15	15					F11-25-033-02-VA	F11-25-033-02-HA	T
Anti-Roll-Kit (Performance Stabilisatoren | *Performance Sway Bars*)																
A160, A180, A200, A250, A160 CDI, A180 CDI, A200 CDI, A220 CDI, A200 4-matic, A200 CDI 4-matic, A220 CDI 4-matic, A45 AMG 4-matic	06.12 -			E40-25-033-01-11	A, 18, 22, 45					28	24	2-fach verstellbar *2-way adjustable*	2-fach verstellbar *2-way adjustable*	AS41-25-033-01-VA	AS41-25-033-01-HA	T
B12 Pro-Kit (Performance Komplettfahrwerke | *Performance Springs+Shocks*)																
A160, A180, A200, A250, A160 CDI, A180 CDI, A200 CDI, A220 CDI, A200 4-matic, A200 CDI 4-matic, A220 CDI 4-matic	06.12 -	1100	975	E90-25-033-01-22	A, 12, 18, 78, 161, 181			30	25					F11-25-031-01-VA	F11-25-031-01-HA	T
A160, A180, A200, A250, A160 CDI, A180 CDI, A200 CDI, A220 CDI, A200 4-matic, A200 CDI 4-matic, A220 CDI 4-matic	06.12 -	1100	975	E90-25-033-02-22	A, 18, 78, 161, 181			15	15					F11-25-033-02-VA	F11-25-033-02-HA	T
Pro-Street-S (Gewindefahrwerke - höhenverstellbar | *Coil-Overs-Adjustable Ride Hight*)																
A160, A180, A200, A250, A160 CDI, A180 CDI, A200 CDI, A220 CDI	06.12 -	1100	945	PSS65-25-033-01-22	A, 18, 24, 25, 45, 160			25-55	30-60							
B-KLASSE (W245)																
B-CLASS (W245)																
Pro-Kit (Performance Fahrwerksfedern | *Performance Springs*)																
B 150, B 160, B 170, B 180	03.05 - 11.11	950	900	E10-25-016-01-22	A, 7, 18, 20, 181			30	30					F11-25-015-02-VA	F11-25-015-01-HA	T
B 180 CDI, B 200, B 200 CDI, B 200 TURBO	03.05 - 11.11	1005	900	E10-25-016-02-22	A, 7, 18, 20, 181			30	30					F11-25-015-01-VA	F11-25-015-01-HA	T
B12 Pro-Kit (Performance Komplettfahrwerke | *Performance Springs+Shocks*)																
B 150, B 160, B 170, B 180	03.05 - 11.11	950	900	E90-25-016-01-22	A, 7, 18, 20, 78, 161			30	30					F11-25-015-02-VA	F11-25-015-01-HA	T
B 180 CDI, B 200, B 200 CDI, B 200 TURBO	03.05 - 11.11	1005	900	E90-25-016-02-22	A, 7, 18, 20, 78, 161			30	30					F11-25-015-01-VA	F11-25-015-01-HA	T
B-KLASSE (W246, W242)																
B-CLASS (W246, W242)																
Pro-Kit (Performance Fahrwerksfedern | *Performance Springs*)																
B160, B180, B200, B250, B160 CDI, B180 CDI, B200 CDI, B220 CDI	11.11 -	1100	980	E10-25-031-01-22	A, 18, 20, 181			30	25					F11-25-031-01-VA	F11-25-031-01-HA	T
Anti-Roll-Kit (Performance Stabilisatoren | *Performance Sway Bars*)																
B160, B180, B200, B250, B160 CDI, B180 CDI, B200 CDI, B220 CDI, B220 4-matic	11.11 -			E40-25-033-01-11	A, 18, 22, 45					28	24	2-fach verstellbar *2-way adjustable*	2-fach verstellbar *2-way adjustable*	AS41-25-033-01-VA	AS41-25-033-01-HA	T
B12 Pro-Kit (Performance Komplettfahrwerke | *Performance Springs+Shocks*)																
B160, B180, B200, B250, B160 CDI, B180 CDI, B200 CDI, B220 CDI	11.11 -	1100	955	E90-25-031-01-22	A, 18, 20, 78, 161, 181			30	25					F11-25-031-01-VA	F11-25-031-01-HA	T
C-KLASSE (W202)																
C-CLASS (W202)																
Pro-Kit (Performance Fahrwerksfedern | *Performance Springs*)																
C180, C200, C200 Kompressor, C220, C230, C230 Kompressor, C280, C200 D, C220 D, C200 CDI, C220 CDI	03.93 - 12.95	970	1030	E2532-140	A, 7, 18, 20, 181			30	30					F2532001	F2532002	ABE
C180, C200, C200 Kompressor, C200 D, C220, C230, C200 CDI, C220 CDI	01.96 - 05.00	990	1070	E2544-140	A, 7, 18, 20, 181			30	30					F2544001	F2544002	T
C 230 Kompressor, C 240, C 250 D, C 250 Turbo-D, C 280	01.96 - 05.00	1010	1070	E2545-140	A, 7, 18, 20, 181			30	30					F2545001	F2544002	T
Sportline (Performance Fahrwerksfedern Sport | *Sport Performance Springs*)																
C 180, C 200, C 200 CDI, C 200 D, C 200 Kompressor, C 220, C 220 CDI, C 220 D, C 230, C 230 Kompressor, C 240	03.93 - 05.00	1010	1070	E20-25-002-01-22	A, 7, 18, 20, 181			45-50	30-35					F21-25-002-01-VA	F21-25-002-01-HA	T
B12 Pro-Kit (Performance Komplettfahrwerke | *Performance Springs+Shocks*)																
C180, C200, C200 Kompressor, C220, C230, C230 Kompressor, C280, C200 D, C220 D, C200 CDI, C220 CDI	03.93 - 12.95	970	1030	E90-25-002-01-22	A, 7, 18, 20, 78, 161, 181			30	30					F2532001	F2532002	ABE
C 180, C 200, C 200 CDI, C 200 Kompressor, C 220, C 220 CDI, C 220 D, C 230	01.96 - 05.00	990	1070	E90-25-002-02-22	A, 7, 18, 20, 78, 161, 181			30	30					F2544001	F2544002	T
C 230 Kompressor, C 240, C 250 D, C 250 Turbo-D, C 280	01.96 - 05.00	1010	1070	E90-25-002-03-22	A, 7, 18, 20, 78, 161, 181			30	30					F2545001	F2544002	T
B12 Sportline (Performance Komplettfahrwerke Sport | *Sport Performance Springs+Shocks*)																
C 180, C 200, C 200 CDI, C 200 D, C 200 Kompressor, C 220, C 220 D, C 230, C 230 Kompressor, C 240	03.93 - 05.00	1010	1070	E95-25-002-01-22	A, 7, 18, 20, 78, 161, 181			45-50	30-35					F21-25-002-01-VA	F21-25-002-01-HA	T

MERCEDES-BENZ

Modell *Model*	Baujahr *Year*	Achslast Vorne kg *Front Axle Load kg*	Achslast Hinten kg *Rear Axle Load kg*	Artikel-Nr. *Part-No.*	Hinweise *Notes*	ab Nachtrag ...xx BE *from suppl. ...xx of type approval*	bis Nachtrag ...xx BE *to suppl. ...xx of type approval*	ca. Tieferl. Vorne mm *ca. Lowering Front mm*	ca. Tieferl. Hinten mm *ca. Lowering Rear mm*	Ø Vorne mm *Ø Front mm*	Ø Hinten mm *Ø Rear mm*	Verstellbarkeit Vorne *Adjustable Front*	Verstellbarkeit Hinten *Adjustable Rear*	Ersatzteilbez. Vorne *Spare Part Marking Front*	Ersatzteilbez. Hinten *Spare Part Marking Rear*	Gutachten *Homologation*
C-KLASSE (W203) ***C-CLASS (W203)***																
Pro-Kit (Performance Fahrwerksfedern | *Performance Springs*)																
C 180, C 180 Kompressor, C 200 CDI, C 200 CGI Kompressor, C 200 Kompressor, C 220 CDI, C 230, C 230 Kompressor	05.00 - 02.07	1035	1170	E10-25-001-01-22	A, 7, 18, 20, 181			30	30					F11-25-001-03-VA	F2536002	T
C 240, C 270 CDI, C 280, C 320, C 320 CDI, C 350	05.00 - 02.07	1130	1170	E10-25-001-02-22	A, 7, 18, 20, 181			30	30					F11-25-001-01-VA	F2536002	T
Anti-Roll-Kit (Performance Stabilisatoren | *Performance Sway Bars*)																
C 180, C 180 Kompressor, C 200 CDI, C 200 Kompressor, C 220 CDI, C 240, C 270 CDI, C 320	05.00 - 06.03			E40-25-001-01-11	A, 18, 20, 22, 45					24	22	2-fach verstellbar *2-way adjustable*	nicht verstellbar *not adjustable*	AS41-25-001-01-VA	AS41-25-001-01-HA	T
C 180 Kompressor, C 200 CDI, C 200 Kompressor, C 220 CDI, C 230, C 230 Kompressor, C 240, C 270 CDI, C 280, C 320, C 320 CDI, C 350	06.03 - 02.07			E40-25-001-07-11	A, 18, 20, 22, 45					24	22	2-fach verstellbar *2-way adjustable*	nicht verstellbar *not adjustable*	AS41-25-001-01-VA	AS41-25-001-01-HA	T
B12 Pro-Kit (Performance Komplettfahrwerke | *Performance Springs+Shocks*)																
C 180, C 180 Kompressor, C 200 CDI, C 200 CGI Kompressor, C 200 Kompressor, C 220 CDI, C 230, C 230 Kompressor	05.00 - 02.07	1035	1170	E90-25-001-01-22	A, 7, 18, 20, 78, 161			30	30					F11-25-001-03-VA	F2536002	T
C 240, C 270 CDI, C 280, C 320, C 320 CDI, C 350	05.00 - 02.07	1130	1170	E90-25-001-02-22	A, 7, 18, 20, 78, 161			30	30					F11-25-001-01-VA	F2536002	T
Pro-Street-S (Gewindefahrwerke - höhenverstellbar | *Coil-Overs-Adjustable Ride Hight*)																
C 180, C 180 Kompressor, C 200 CDI, C 200 CGI Kompressor, C 200 Kompressor, C 220 CDI, C 230, C 230 Kompressor, C 240, C 270 CDI, C 280, C 320, C 320 CDI, C 350	05.00 - 02.07	995	1170	PSS65-25-001-01-22	A, 18, 24, 25, 45, 160			35-65	35-65							T
C 180, C 180 Kompressor, C 200 CDI, C 200 CGI Kompressor, C 200 Kompressor, C 220 CDI, C 230, C 230 Kompressor, C 240, C 270 CDI, C 280, C 320, C 320 CDI, C 350	05.00 - 02.07	1090	1170	PSS65-25-001-02-22	A, 18, 24, 25, 45, 160			35-65	35-65							T
C-KLASSE (W204) ***C-CLASS (W204)***																
Pro-Kit (Performance Fahrwerksfedern | *Performance Springs*)																
C230, C280, C300, C350, C180 CDI, C200 CDI, C220 CDI, C 220 BlueTEC, C250 CDI, C320 CDI, C350 CDI, C350 CGI	01.07 -	1150	1200	E10-25-019-02-22	A, 7, 18, 20, 181			30	30					F11-25-019-02-VA	F11-25-019-01-HA	T
C180 Kompressor, C180 CGI, C200, C200 Kompressor, C200 CGI, C250 CGI	01.07 -	1150	1200	E10-25-019-01-22	A, 7, 18, 20, 181			30	30					F11-25-019-01-VA	F11-25-019-01-HA	T
C 220 CDI 4-matic, C 230 4-matic, C 250 CDI 4-matic, C 280 4-matic, C 300 4-matic, C 300 CDI 4-matic, C 320 CDI 4-matic, C 350 4-matic, C 350 CDI 4-matic	07.07 -	1160	1225	E10-25-019-07-22	A, 7, 18, 181			20	20					F11-25-021-02-VA	F11-25-019-03-HA	T
Anti-Roll-Kit (Performance Stabilisatoren | *Performance Sway Bars*)																
C180 Kompressor, C200, C200 Kompressor, C230, C280, C300, C350, C200 CDI, C220 CDI, C 220 BlueTEC, C250 CDI, C320 CDI, C350 CDI, C180 CGI, C200 CGI, C250 CGI, C350 CGI	01.07 -			E40-25-019-01-11	A, 18, 20, 22, 45					28	21	2-fach verstellbar *2-way adjustable*	nicht verstellbar *not adjustable*	AS41-25-019-01-VA	AS41-25-019-01-HA	T
B12 Pro-Kit (Performance Komplettfahrwerke | *Performance Springs+Shocks*)																
C230, C280, C300, C350, C180 CDI, C200 CDI, C220 CDI, C 220 BlueTEC, C250 CDI, C320 CDI, C350 CDI, C350 CGI	01.07 -	1150	1200	E90-25-019-02-22	A, 7, 18, 20, 21, 78, 161			30	30					F11-25-019-02-VA	F11-25-019-01-HA	T
C180 Kompressor, C180 CGI, C200, C200 Kompressor, C200 CGI, C250 CGI	01.07 -	1150	1200	E90-25-019-01-22	A, 7, 18, 20, 21, 78, 161			30	30					F11-25-019-01-VA	F11-25-019-01-HA	T
Pro-Street-S (Gewindefahrwerke - höhenverstellbar | *Coil-Overs-Adjustable Ride Hight*)																
C180 Kompressor, C180 CGI, C200, C200 Kompressor, C200 CGI, C250 CGI	01.07 -	975	1165	PSS65-25-019-01-22	A, 18, 25, 45, 160, 181			25-55	25-55							T
C180 Kompressor, C180 CGI, C200, C200 Kompressor, C200 CGI, C250 CGI, C230, C280, C300, C350, C180 CDI, C200 CDI, C220 CDI, C 220 BlueTEC, C250 CDI, C320 CDI, C350 CDI, C350 CGI	01.07 -	1020	1165	PSS65-25-019-02-22	A, 18, 25, 45, 160, 181			25-55	25-55							T
C230, C250 CGI, C280, C300, C350, C180 CDI, C200 CDI, C220 CDI, C 220 BlueTEC, C250 CDI, C320 CDI, C350 CDI, C350 CGI	01.07 -	1100	1165	PSS65-25-019-03-22	A, 18, 25, 45, 160, 181			25-55	25-55							T
C-KLASSE (W205) ***C-CLASS (W205)***																
Pro-Kit (Performance Fahrwerksfedern | *Performance Springs*)																
C160, C180, C200, C220, C250, C300	12.13 -	1030	1145	E10-25-036-01-22	A, 18, 20, 181			35	35					F11-25-036-01-VA	F11-25-036-01-HA	T
C180 BlueTEC, C200 BlueTEC, C220 BlueTEC, C250 BlueTEC, C200 4-matic, C400 4-matic, C220 d 4-matic, C400 4-matic, C250 BlueTEC 4-matic	12.13 -	1125	1145	E10-25-036-02-22	A, 18, 181			35	35					F11-25-036-02-VA	F11-25-036-01-HA	T
AMG C 63, AMG C 63 S	10.14 -	1090	1250	E10-25-036-05-22	A, 18, 20			20	10					F11-25-036-05-FA	F11-25-036-06-RA	T
C-KLASSE Coupe (CL203) ***C-CLASS Coupe (CL203)***																
Pro-Kit (Performance Fahrwerksfedern | *Performance Springs*)																
C 160 Kompressor, C 180, C 180 Kompressor, C 200 CGI Kompressor, C 200 Kompressor, C 220, C 230, C 230 Kompressor	03.01 - 05.08	1070	1035	E10-25-001-04-22	A, 7, 18, 20, 181			25-30	20-25					F11-25-001-03-VA	F2538002	T
C 200 CDI, C 220 CDI, C 320, C 350	03.01 - 05.08	1100	1035	E10-25-001-08-22	A, 7, 18, 20, 181			25-30	20-25					F11-25-001-01-VA	F2538002	T
Anti-Roll-Kit (Performance Stabilisatoren | *Performance Sway Bars*)																
C 160 Kompressor, C 180, C 180 Kompressor, C 200 CDI, C 200 CGI Kompressor, C 200 Kompressor, C 220, C 220 CDI, C 230 Kompressor, C 320	03.01 - 06.03			E40-25-001-01-11	A, 18, 20, 22, 45					24	22	2-fach verstellbar *2-way adjustable*	nicht verstellbar *not adjustable*	AS41-25-001-01-VA	AS41-25-001-01-HA	T
C 160 Kompressor, C 180 Kompressor, C 200 CDI, C 200 CGI Kompressor, C 200 Kompressor, C 220, C 220 CDI, C 230, C 230 Kompressor, C 320, C 350	06.03 - 05.08			E40-25-001-07-11	A, 18, 20, 22, 45					24	22	2-fach verstellbar *2-way adjustable*	nicht verstellbar *not adjustable*	AS41-25-001-01-VA	AS41-25-001-01-HA	T
B12 Pro-Kit (Performance Komplettfahrwerke | *Performance Springs+Shocks*)																
C 160 Kompressor, C 180, C 180 Kompressor, C 200 CGI Kompressor, C 200 Kompressor, C 230, C 230 Kompressor	03.01 - 05.08	1070	1035	E90-25-001-04-22	A, 7, 18, 20, 78, 161, 181			25-30	20-25					F11-25-001-03-VA	F2538002	T
C 200 CDI, C 220 CDI, C 320, C 350	03.01 - 05.08	1100	1035	E90-25-001-08-22	A, 7, 18, 20, 78, 161, 181			25-30	20-25					F11-25-001-01-VA	F2538002	T
C-KLASSE Coupe (C204) ***C-CLASS Coupe (C204)***																
Pro-Kit (Performance Fahrwerksfedern | *Performance Springs*)																
C 180, C 200 CGI, C 250	06.11 -	1150	1230	E10-25-019-03-22	A, 7, 18, 20, 181			25	25					F11-25-019-01-VA	F11-25-019-03-HA	T
C 220 CDI, C 250 CDI, C 350	06.11 -	1150	1230	E10-25-019-04-22	A, 7, 18, 20, 181			25	25					F11-25-019-02-VA	F11-25-019-03-HA	T

MERCEDES-BENZ

Modell *Model*	Baujahr *Year*	Achslast Vorne kg *Front Axle Load kg*	Achslast Hinten kg *Rear Axle Load kg*	Artikel-Nr. *Part-No.*	Hinweise *Notes*	ab Nachtrag ...xx BE *from suppl. ...xx of type approval*	bis Nachtrag ...xx BE *to suppl. ...xx of type approval*	ca. Tieferl. Vorne mm *ca. Lowering Front mm*	ca. Tieferl. Hinten mm *ca. Lowering Rear mm*	Ø Vorne mm *Ø Front mm*	Ø Hinten mm *Ø Rear mm*	Verstellbarkeit Vorne *Adjustable Front*	Verstellbarkeit Hinten *Adjustable Rear*	Ersatzteilbez. Vorne *Spare Part Marking Front*	Ersatzteilbez. Hinten *Spare Part Marking Rear*	Gutachten *Homologation*
C-KLASSE Coupe (C204) ***C-CLASS Coupe (C204)***																
Anti-Roll-Kit (Performance Stabilisatoren | *Performance Sway Bars*)																
C 180, C 200 CGI, C 220 CDI, C 250, C 250 CDI, C 350	06.11 -			E40-25-019-01-11	A, 18, 20, 22, 45					28	21	2-fach verstellbar *2-way adjustable*	nicht verstellbar *not adjustable*	AS41-25-019-01-VA	AS41-25-019-01-HA	T
B12 Pro-Kit (Performance Komplettfahrwerke | *Performance Springs+Shocks*)																
C 180, C 200 CGI, C 250	06.11 -	1150	1230	E90-25-019-03-22	A, 7, 18, 20, 21, 78, 161, 181			25	25					F11-25-019-01-VA	F11-25-019-03-HA	T
C 220 CDI, C 250 CDI, C 350	06.11 -	1150	1230	E90-25-019-04-22	A, 7, 18, 20, 21, 78, 161, 181			25	25					F11-25-019-02-VA	F11-25-019-03-HA	T
Pro-Street-S (Gewindefahrwerke - höhenverstellbar | *Coil-Overs-Adjustable Ride Hight*)																
C 180, C 200 CGI, C 250	01.07 -	985	1105	PSS65-25-019-01-22	A, 18, 25, 45, 160, 181			10-40	10-50							T
C180, C200 CGI, C250, C350, C220 CDI, C250 CDI	01.07 -	1040	1105	PSS65-25-019-02-22	A, 18, 25, 45, 160, 181			10-40	10-50							T
C350, C220 CDI, C250 CDI	01.07 -	1075	1105	PSS65-25-019-03-22	A, 18, 25, 45, 160, 181			10-40	10-50							T
C-CLASS Kombi (S202) ***C-CLASS Estate (S202)***																
Pro-Kit (Performance Fahrwerksfedern | *Performance Springs*)																
C 180 T, C 200 T, C 200 T CDI, C 200 T D, C 200 T Kompressor, C 220 T CDI, C 220 T D, C 230 T	06.96 - 03.01	990	1070	E2546-140	A, 7, 18, 20, 181			30	30					F2544001	F2536002	T
C 230 T Kompressor, C 240 T, C 250 T Turbo-D, C 280 T	06.96 - 03.01	1010	1070	E2547-140	A, 7, 18, 20, 181			30	30					F2545001	F2536002	T
B12 Pro-Kit (Performance Komplettfahrwerke | *Performance Springs+Shocks*)																
C 180 T, C 200 T, C 200 T CDI, C 200 T D, C 200 T Kompressor, C 220 T CDI, C 220 T D, C 230 T	06.96 - 03.01	990	1070	E90-25-002-08-22	A, 7, 18, 20, 78, 161, 181			30	30					F2544001	F2536002	T
C 230 T Kompressor, C 240 T, C 250 T Turbo-D, C 280 T	06.96 - 03.01	1010	1070	E90-25-002-09-22	A, 7, 18, 20, 78, 161, 181			30	30					F2545001	F2536002	T
C-CLASS T-Model (S203)																
Pro-Kit (Performance Fahrwerksfedern | *Performance Springs*)																
C 180, C 180 Kompressor, C 200 CDI, C 200 CGI Kompressor, C 200 Kompressor, C 220 CDI, C 230, C 230 Kompressor	03.01 - 08.07	1015	1170	E10-25-001-05-22	A, 7, 18, 20, 181			30	30					F11-25-001-03-VA	F11-25-001-05-HA	T
C 240, C 270 CDI, C 280, C 320, C 320 CDI, C 350	03.01 - 08.07	1090	1170	E10-25-001-06-22	A, 7, 18, 20, 181			30	30					F11-25-001-01-VA	F11-25-001-05-HA	T
Anti-Roll-Kit (Performance Stabilisatoren | *Performance Sway Bars*)																
C 180, C 180 Kompressor, C 200 CDI, C 200 Kompressor, C 220 CDI, C 240, C 270 CDI, C 320	03.01 - 06.03			E40-25-001-01-11	A, 18, 20, 22, 45					24	22	2-fach verstellbar *2-way adjustable*	nicht verstellbar *not adjustable*	AS41-25-001-01-VA	AS41-25-001-01-HA	T
C 180 Kompressor, C 200 CDI, C 200 Kompressor, C 220 CDI, C 230, C 230 Kompressor, C 240, C 270 CDI, C 280, C 320, C 320 CDI, C 350	06.03 - 08.07			E40-25-001-07-11	A, 18, 20, 22, 45					24	22	2-fach verstellbar *2-way adjustable*	nicht verstellbar *not adjustable*	AS41-25-001-01-VA	AS41-25-001-01-HA	T
B12 Pro-Kit (Performance Komplettfahrwerke | *Performance Springs+Shocks*)																
C 180, C 180 Kompressor, C 200 CDI, C 200 Kompressor, C 220 CDI, C 230, C 230 Kompressor	03.01 - 08.07	1015	1170	E90-25-001-05-22	A, 7, 18, 20, 78, 87, 161, 181			30	30					F11-25-001-03-VA	F11-25-001-05-HA	T
C 240, C 270 CDI, C 280, C 320, C 320 CDI, C 350	03.01 - 08.07	1090	1170	E90-25-001-06-22	A, 7, 18, 20, 78, 87, 161, 181			30	30					F11-25-001-01-VA	F11-25-001-05-HA	T
Pro-Street-S (Gewindefahrwerke - höhenverstellbar | *Coil-Overs-Adjustable Ride Hight*)																
C 180, C 180 Kompressor, C 200 CDI, C 200 CGI Kompressor, C 200 Kompressor, C 220 CDI, C 230, C 230 Kompressor, C 240, C 270 CDI, C 280, C 320, C 320 CDI, C 350	03.01 - 08.07	995	1170	PSS65-25-001-01-22	A, 18, 24, 25, 45, 160, 181			35-65	35-65							T
C 180, C 180 Kompressor, C 200 CDI, C 200 CGI Kompressor, C 200 Kompressor, C 220 CDI, C 230, C 230 Kompressor, C 240, C 270 CDI, C 280, C 320, C 320 CDI, C 350	03.01 - 08.07	1090	1170	PSS65-25-001-02-22	A, 18, 24, 25, 45, 160, 181			35-65	35-65							T
C-CLASS T-Model (S204)																
Pro-Kit (Performance Fahrwerksfedern | *Performance Springs*)																
C 180 CDI, C 200 CDI, C 220 CDI, C 230, C 250 CDI, C 280, C 320 CDI, C 350, C 350 CDI, C 350 CGI	01.07 -	1150	1230	E10-25-019-04-22	A, 7, 18, 20, 181			30	30					F11-25-019-02-VA	F11-25-019-03-HA	T
C 180 CGI, C 180 Kompressor, C 200 CGI, C 200 Kompressor, C 250 CGI	08.07 -	1150	1230	E10-25-019-03-22	A, 7, 18, 20, 181			30	30					F11-25-019-01-VA	F11-25-019-03-HA	T
C 220 CDI 4-matic, C 250 CDI 4-matic, C 320 CDI 4-matic, C 350 CDI 4-matic	04.11 -	1160	1225	E10-25-019-07-22	A, 7, 18, 181			20	20					F11-25-021-02-VA	F11-25-019-03-HA	T
Anti-Roll-Kit (Performance Stabilisatoren | *Performance Sway Bars*)																
C 180 CDI, C 180 CGI, C 180 Kompressor, C 200 CDI, C 200 CGI, C 200 Kompressor, C 220 CDI, C 230, C 250 CDI, C 250 CGI, C 280, C 320 CDI, C 350, C 350 CDI, C 350 CGI	01.07 -			E40-25-019-01-11	A, 18, 20, 22, 45					28	21	2-fach verstellbar *2-way adjustable*	nicht verstellbar *not adjustable*	AS41-25-019-01-VA	AS41-25-019-01-HA	T
B12 Pro-Kit (Performance Komplettfahrwerke | *Performance Springs+Shocks*)																
C 180 CDI, C 200 CDI, C 220 CDI, C 250 CDI, C 280, C 320 CDI, C 350, C 350 CDI, C 350 CGI	08.07 -	1150	1230	E90-25-019-04-22	A, 7, 18, 20, 21, 78, 161			30	30							T
C 180 CGI, C 180 Kompressor, C 200 CGI, C 200 Kompressor, C 230, C 250 CGI	08.07 -	1150	1230	E90-25-019-03-22	A, 7, 18, 20, 21, 78, 161			30	30					F11-25-019-01-VA	F11-25-019-03-HA	T
Pro-Street-S (Gewindefahrwerke - höhenverstellbar | *Coil-Overs-Adjustable Ride Hight*)																
C180 Kompressor, C180 CGI, C200, C200 Kompressor, C200 CGI, C250 CGI	08.07 -	975	1230	PSS65-25-019-04-22	A, 18, 24, 25, 45, 160, 181			25-55	25-55							T
C230, C280, C300, C350, C180 CDI, C200 CDI, C220 CDI, C 220 BlueTEC, C250 CDI, C320 CDI, C350 CDI, C350 CGI	08.07 -	1020	1230	PSS65-25-019-05-22	A, 18, 24, 25, 45, 160, 181			25-55	25-55							T
C230, C280, C300, C350, C180 CDI, C200 CDI, C220 CDI, C 220 BlueTEC, C250 CDI, C320 CDI, C350 CDI, C350 CGI	08.07 -	1100	1230	PSS65-25-019-06-22	A, 18, 24, 25, 45, 160, 181			25-55	25-55							T
C-KLASSE Kombi (S205) ***C-CLASS Estate (S205)***																
Pro-Kit (Performance Fahrwerksfedern | *Performance Springs*)																
C160, C180, C200, C220, C250, C300	09.14 -	1030	1210	E10-25-036-03-22	A, 18, 20, 181			30	20					F11-25-036-01-VA	F11-25-036-02-RA	T
C180 BlueTEC, C200 BlueTEC, C220 BlueTEC, C250 BlueTEC, C200 4-matic, C400 4-matic, C220 d 4-matic, C400 4-matic, C250 BlueTEC 4-matic	09.14 -	1095	1210	E10-25-036-04-22	A, 18, 181			30	20					F11-25-036-02-VA	F11-25-036-02-RA	T
AMG C 63, AMG C 63 S	10.15 -	1090	1250	E10-25-036-06-22	A, 18, 20			20	10					F11-25-036-05-FA	F11-25-036-06-RA	T

MERCEDES-BENZ

Modell *Model*	Baujahr *Year*	Achslast Vorne kg *Front Axle Load kg*	Achslast Hinten kg *Rear Axle Load kg*	Artikel-Nr. *Part-No.*	Hinweise *Notes*	ab Nachtrag ...xx BE *from suppl. ...xx of type approval*	bis Nachtrag ...xx BE *to suppl. ...xx of type approval*	ca. Tieferl. Vorne mm *ca. Lowering Front mm*	ca. Tieferl. Hinten mm *ca. Lowering Rear mm*	Ø Vorne mm *Ø Front mm*	Ø Hinten mm *Ø Rear mm*	Verstellbarkeit Vorne *Adjustable Front*	Verstellbarkeit Hinten *Adjustable Rear*	Ersatzteilbez. Vorne *Spare Part Marking Front*	Ersatzteilbez. Hinten *Spare Part Marking Rear*	Gutachten *Homologation*
CABRIOLET (A124) ***CONVERTIBLE (A124)***																
Pro-Kit (Performance Fahrwerksfedern | *Performance Springs*)																
300 CE-24	04.92 - 06.93	1010	1170	E2517-140	A, 7, 16, 18, 20, 181			35	30-35					F2517001	F2504002	T
300 CE-24	04.92 - 06.93	1010	1230	E2518-140	A, 7, 16, 20, 181			35	25-30					F2517001	F2518002	T
CITAN Kasten (415) ***CITAN Box (415)***																
Pro-Kit (Performance Fahrwerksfedern | *Performance Springs*)																
112, 108 CDI, 109 CDI, 111 CDI	11.12 -	1125	1240	E10-25-034-01-22	A, 18, 20, 181			30	20					F11-25-034-01-VA	F11-25-034-01-HA	T
CITAN Kombi (415) ***CITAN Combi (415)***																
Pro-Kit (Performance Fahrwerksfedern | *Performance Springs*)																
112, 108 CDI, 109 CDI, 111 CDI	11.12 -	1125	1240	E10-25-034-01-22	A, 18, 20, 181			30	20					F11-25-034-01-VA	F11-25-034-01-HA	T
CITAN Mixto (415)																
Pro-Kit (Performance Fahrwerksfedern | *Performance Springs*)																
109 CDI, 111 CDI	11.12 -	1125	1240	E10-25-034-01-22	A, 18, 20, 181			30	20					F11-25-034-01-VA	F11-25-034-01-HA	T
CLA Coupe (C117)																
Pro-Kit (Performance Fahrwerksfedern | *Performance Springs*)																
CLA 180, CLA 200, CLA 250, CLA 180 CDI, CLA 200 CDI, CLA 220 CDI, CLA 250 4-matic, CLA 200 CDI 4-matic, CLA 220 CDI 4-matic	01.13 -	1100	975	E10-25-033-01-22	A, 12, 18, 181			30	25					F11-25-031-01-VA	F11-25-031-01-HA	T
CLA 180, CLA 200, CLA 250, CLA 180 CDI, CLA 200 CDI, CLA 220 CDI, CLA 250 4-matic, CLA 200 CDI 4-matic, CLA 220 CDI 4-matic	01.13 -	1100	975	E10-25-033-02-22	A, 18, 181			15	15					F11-25-033-02-VA	F11-25-033-02-HA	T
Anti-Roll-Kit (Performance Stabilisatoren | *Performance Sway Bars*)																
CLA 180, CLA 200, CLA 250, CLA 180 CDI, CLA 200 CDI, CLA 220 CDI, CLA 250 4-matic, 200 CDI 4-matic, CLA 220 CDI 4-matic, CLA 45 AMG 4-matic	01.13 -			E40-25-033-01-11	A, 18, 22, 45					28	24	2-fach verstellbar *2-way adjustable*	2-fach verstellbar *2-way adjustable*	AS41-25-033-01-VA	AS41-25-033-01-HA	T
B12 Pro-Kit (Performance Komplettfahrwerke | *Performance Springs+Shocks*)																
CLA 180, CLA 200, CLA 250, CLA 180 CDI, CLA 200 CDI, CLA 220 CDI, CLA 250 4-matic, CLA 200 CDI 4-matic, CLA 220 CDI 4-matic	01.13 -	1100	975	E90-25-033-01-22	A, 12, 18, 78, 161, 181			35	25					F11-25-031-01-VA	F11-25-031-01-HA	T
CLA 180, CLA 200, CLA 250, CLA 180 CDI, CLA 200 CDI, CLA 220 CDI, CLA 250 4-matic, CLA 200 CDI 4-matic, CLA 220 CDI 4-matic	01.13 -	1100	975	E90-25-033-02-22	A, 18, 78, 161, 181			15	15					F11-25-033-02-VA	F11-25-033-02-HA	T
Pro-Street-S (Gewindefahrwerke - höhenverstellbar | *Coil-Overs-Adjustable Ride Hight*)																
CLA 180, CLA 200, CLA 250, CLA 180 CDI, CLA 200 CDI, CLA 220 CDI	01.13 -	1100	945	PSS65-25-033-01-22	A, 18, 24, 25, 45, 160			25-55	30-60							
CLC-KLASSE (CL203) ***CLC-CLASS (CL203)***																
Pro-Kit (Performance Fahrwerksfedern | *Performance Springs*)																
CLC 160, CLC 180 Kompressor, CLC 200 Kompressor, CLC 230	05.08 - 06.11	1070	1035	E10-25-001-04-22	A, 7, 18, 20, 181			25-30	20-25					F11-25-001-03-VA	F2538002	T
CLC 200 CDI, CLC 220 CDI, CLC 350	05.08 - 06.11	1100	1035	E10-25-001-08-22	A, 7, 18, 20, 181			25-30	20-25					F11-25-001-01-VA	F2538002	T
Anti-Roll-Kit (Performance Stabilisatoren | *Performance Sway Bars*)																
CLC 160, CLC 180 Kompressor, CLC 200 CDI, CLC 200 Kompressor, CLC 220 CDI, CLC 230, CLC 350	06.03 - 06.11			E40-25-001-07-11	A, 18, 20, 22, 45					24	22	2-fach verstellbar *2-way adjustable*	nicht verstellbar *not adjustable*	AS41-25-001-01-VA	AS41-25-001-01-HA	T
B12 Pro-Kit (Performance Komplettfahrwerke | *Performance Springs+Shocks*)																
CLC 180 Kompressor, CLC 200 Kompressor, CLC 230	05.08 - 06.11	1070	1035	E90-25-001-04-22	A, 7, 18, 20, 78, 161			25-30	20-25					F11-25-001-03-VA	F2538002	T
CLC 200 CDI, CLC 220 CDI, CLC 350	05.08 - 06.11	1100	1035	E90-25-001-08-22	A, 7, 18, 20, 78, 161			25-30	20-25					F11-25-001-01-VA	F2538002	T
CLK (C208)																
Pro-Kit (Performance Fahrwerksfedern | *Performance Springs*)																
200, 200 Kompressor	06.97 - 06.02	990	1070	E2554-140	A, 7, 18, 20, 181			30	30					F2544001	F2544002	T
230 Kompressor, 320, 430	06.97 - 06.02	1010	1070	E2555-140	A, 7, 18, 20, 181			30	30					F2545001	F2544002	T
Sportline (Performance Fahrwerksfedern Sport | *Sport Performance Springs*)																
200, 200 Kompressor, 230 Kompressor, 320, 430	06.97 - 06.02	1010	1070	E20-25-002-01-22	A, 7, 18, 20, 181			45-50	30-35					F21-25-002-01-VA	F21-25-002-01-HA	T
B12 Pro-Kit (Performance Komplettfahrwerke | *Performance Springs+Shocks*)																
200, 200 Kompressor	06.97 - 06.02	990	1070	E90-25-002-04-22	A, 7, 18, 20, 78, 161			30	30					F2544001	F2544002	T
230 Kompressor, 320, 430	06.97 - 06.02	1010	1070	E90-25-002-05-22	A, 7, 18, 20, 78, 161			30	30					F2545001	F2544002	T
B12 Sportline (Performance Komplettfahrwerke Sport | *Sport Performance Springs+Shocks*)																
200, 200 Kompressor, 230 Kompressor, 320, 430	06.97 - 06.02	1010	1070	E95-25-002-02-22	A, 7, 18, 20, 78, 161			45-50	30-35					F21-25-002-01-VA	F21-25-002-01-HA	T
CLK (C209)																
Pro-Kit (Performance Fahrwerksfedern | *Performance Springs*)																
200 CGI, 200 Kompressor, 220 CDI	09.02 - 05.09	1035	1170	E10-25-001-01-22	A, 7, 18, 20, 181			30	30					F11-25-001-03-VA	F2536002	T
240, 270 CDI, 280, 320, 320 CDI, 350, 500	06.02 - 05.09	1130	1170	E10-25-001-02-22	A, 7, 18, 20, 181			30	30					F11-25-001-01-VA	F2536002	T
Anti-Roll-Kit (Performance Stabilisatoren | *Performance Sway Bars*)																
200 Kompressor, 240, 270 CDI, 320, 500	06.02 - 06.03			E40-25-001-01-11	A, 18, 20, 22, 45					24	22	2-fach verstellbar *2-way adjustable*	nicht verstellbar *not adjustable*	AS41-25-001-01-VA	AS41-25-001-01-HA	T
200 CGI, 200 Kompressor, 220 CDI, 240, 270 CDI, 280, 320, 320 CDI, 350, 500	06.03 - 05.09			E40-25-001-07-11	A, 18, 20, 22, 45					24	22	2-fach verstellbar *2-way adjustable*	nicht verstellbar *not adjustable*	AS41-25-001-01-VA	AS41-25-001-01-HA	T
B12 Pro-Kit (Performance Komplettfahrwerke | *Performance Springs+Shocks*)																
200 CGI, 200 Kompressor, 220 CDI	09.02 - 05.09	1035	1170	E90-25-001-01-22	A, 7, 18, 20, 21, 78, 161			30	30					F11-25-001-03-VA	F2536002	T
240, 270 CDI, 280, 320, 320 CDI, 350, 500	06.02 - 05.09	1130	1170	E90-25-001-02-22	A, 7, 18, 20, 21, 78, 161			30	30					F11-25-001-01-VA	F2536002	T
CLK Cabriolet (A208) ***CLK Convertible (A208)***																
Pro-Kit (Performance Fahrwerksfedern | *Performance Springs*)																
200, 200 Kompressor	03.98 - 03.02	990	1070	E2560-140	A, 7, 18, 20, 181			30	30					F2544001	F2536002	T
230 Kompressor, 320, 430	03.98 - 03.02	1010	1070	E2561-140	A, 7, 18, 20, 181			30	30					F2545001	F2536002	T

MERCEDES-BENZ

Modell *Model*	Baujahr *Year*	Achslast Vorne kg *Front Axle Load kg*	Achslast Hinten kg *Rear Axle Load kg*	Artikel-Nr. *Part-No.*	Hinweise *Notes*	ab Nachtrag ...xx BE *from suppl. ...xx of type approval*	bis Nachtrag ...xx BE *to suppl. ...xx of type approval*	ca. Tieferl. Vorne mm *ca. Lowering Front mm*	ca. Tieferl. Hinten mm *ca. Lowering Rear mm*	Ø Vorne mm *Ø Front mm*	Ø Hinten mm *Ø Rear mm*	Verstellbarkeit Vorne *Adjustable Front*	Verstellbarkeit Hinten *Adjustable Rear*	Ersatzteilbez. Vorne *Spare Part Marking Front*	Ersatzteilbez. Hinten *Spare Part Marking Rear*	Gutachten *Homologation*
CLK Cabriolet (A208) ***CLK Convertible (A208)***																
Sportline (Performance Fahrwerksfedern Sport | *Sport Performance Springs*)																
200, 200 Kompressor, 230 Kompressor, 320, 430	03.98 - 03.02	1010	1070	E20-25-002-01-22	A, 7, 18, 20, 181			45-50	30-35					F21-25-002-01-VA	F21-25-002-01-HA	T
B12 Pro-Kit (Performance Komplettfahrwerke | *Performance Springs+Shocks*)																
200, 200 Kompressor	03.98 - 03.02	990	1070	E90-25-002-06-22	A, 7, 18, 20, 78, 161			30	30					F2544001	F2536002	T
230 Kompressor, 320, 430	03.98 - 03.02	1010	1070	E90-25-002-07-22	A, 7, 18, 20, 78, 161			30	30					F2545001	F2536002	T
B12 Sportline (Performance Komplettfahrwerke Sport | *Sport Performance Springs+Shocks*)																
200, 200 Kompressor, 230 Kompressor, 320, 430	03.98 - 03.02	1010	1070	E95-25-002-02-22	A, 7, 18, 20, 78, 161			45-50	30-35					F21-25-002-01-VA	F21-25-002-01-HA	T
CLK Cabriolet (A209) ***CLK Convertible (A209)***																
Pro-Kit (Performance Fahrwerksfedern | *Performance Springs*)																
CLK 200 CGI, CLK 200 Kompressor	02.03 - 03.10	1035	1170	E10-25-001-01-22	A, 7, 18, 20, 181			30	30					F11-25-001-03-VA	F2536002	T
CLK 240, CLK 280, CLK 320, CLK 350, CLK 500	02.03 - 03.10	1130	1170	E10-25-001-02-22	A, 7, 18, 20, 181			30	30					F11-25-001-01-VA	F2536002	T
Anti-Roll-Kit (Performance Stabilisatoren | *Performance Sway Bars*)																
CLK 200 Kompressor, CLK 240, CLK 320, CLK 500	02.03 - 06.03			E40-25-001-01-11	A, 18, 20, 22, 45					24	22	2-fach verstellbar *2-way adjustable*	nicht verstellbar *not adjustable*	AS41-25-001-01-VA	AS41-25-001-01-HA	T
CLK 200 CGI, CLK 200 Kompressor, CLK 240, CLK 280, CLK 320, CLK 350, CLK 500	06.03 - 03.10			E40-25-001-07-11	A, 18, 20, 22, 45					24	22	2-fach verstellbar *2-way adjustable*	nicht verstellbar *not adjustable*	AS41-25-001-01-VA	AS41-25-001-01-HA	T
B12 Pro-Kit (Performance Komplettfahrwerke | *Performance Springs+Shocks*)																
CLK 200 CGI, CLK 200 Kompressor	02.03 - 03.10	1035	1170	E90-25-001-01-22	A, 7, 18, 20, 21, 78, 161			30	30					F11-25-001-03-VA	F2536002	T
CLK 240, CLK 280, CLK 320, CLK 350, CLK 500	02.03 - 03.10	1130	1170	E90-25-001-02-22	A, 7, 18, 20, 21, 78, 161			30	30					F11-25-001-01-VA	F2536002	T
CLS (C218)																
Pro-Kit (Performance Fahrwerksfedern | *Performance Springs*)																
CLS 350, CLS 350 BlueTEC, CLS 220 BlueTEC, CLS 250 CDI, CLS 350 CDI	01.11 -	1160	1200	E10-25-021-01-22	A, 7, 18, 20, 181			30	30					F11-25-021-01-VA	F11-25-021-01-HA	T
B12 Pro-Kit (Performance Komplettfahrwerke | *Performance Springs+Shocks*)																
CLS 350, CLS 350 BlueTEC, CLS 220 BlueTEC, CLS 250 CDI, CLS 350 CDI	01.11 -	1160	1200	E90-25-021-06-22	A, 7, 18, 20, 78, 161, 181, 193			30	30					F11-25-021-01-VA	F11-25-021-01-HA	T
CLS (C219)																
Pro-Kit (Performance Fahrwerksfedern | *Performance Springs*)																
CLS 320 CDI, CLS 350, CLS 350 CGI	10.04 - 12.10	1135	1190	E10-25-008-08-22	A, 7, 20, 181			30	25-30					F11-25-008-02-VA	F11-25-008-08-HA	T
Anti-Roll-Kit (Performance Stabilisatoren | *Performance Sway Bars*)																
CLS 320 CDI, CLS 350, CLS 350 CGI	10.04 - 12.10			E40-25-008-08-11	A, 18, 20, 22, 45					34	21	nicht verstellbar *not adjustable*	nicht verstellbar *not adjustable*	AS41-25-008-01-VA	AS41-25-008-01-HA	T
B12 Pro-Kit (Performance Komplettfahrwerke | *Performance Springs+Shocks*)																
CLS 320 CDI, CLS 350	10.04 - 12.10	1135	1190	E90-25-008-05-22	A, 7, 20, 78, 161			30	25-30					F11-25-008-02-VA	F11-25-008-08-HA	T
CLS Shooting Brake (X218)																
Pro-Kit (Performance Fahrwerksfedern | *Performance Springs*)																
CLS 350, CLS 220 BlueTEC, CLS 250 CDI	10.12 -	1055	1460	E10-25-021-04-22	A, 7, 20, 181			30	30					F11-25-021-01-VA	AZ45-25-021-04-01	T
CLS 350, CLS 350 CDI	10.12 -	1220	1460	E10-25-021-05-22	A, 7, 20, 181			30	30					F11-25-021-02-VA	AZ45-25-021-04-01	T
B12 Pro-Kit (Performance Komplettfahrwerke | *Performance Springs+Shocks*)																
CLS 350, CLS 220 BlueTEC, CLS 250 CDI	10.12 -	1055	1460	E90-25-021-04-22	A, 7, 20, 78, 161, 181, 193			30	30					F11-25-021-01-VA	AZ45-25-021-04-01	T
CLS 350, CLS 350 CDI	10.12 -	1220	1460	E90-25-021-05-22	A, 7, 20, 78, 161, 181, 193			30	30					F11-25-021-02-VA	AZ45-25-021-04-01	T
COUPE (C124)																
Pro-Kit (Performance Fahrwerksfedern | *Performance Springs*)																
220 CE, 230 CE, 230 CE KAT *220 CE, 230 CE, 230 CE CAT*	03.87 - 05.93	930	985	E2504-140	A, 7, 18, 20, 181			35	30-35					F2504001	F2504002	T
220 CE, 230 CE, 230 CE KAT *220 CE, 230 CE, 230 CE CAT*	03.87 - 05.93	950	1230	E2511-140	A, 7, 20, 181			35	25-30					F2504001	F2518002	T
220 CE Sonderausstattung, 230 CE KAT Sonderausstattung, 230 CE Sonderausstattung *220 CE special equipment, 230 CE CAT special equipment, 230 CE special equipment*	03.87 - 05.93	1005	1000	E2505-140	A, 7, 16, 18, 20, 181			35	30-35					F2505001	F2504002	T
300 CE, 300 CE-24	03.87 - 05.93	1005	1000	E2505-140	A, 7, 18, 20, 181			35	30-35					F2505001	F2504002	T
220 CE Sonderausstattung, 230 CE KAT Sonderausstattung, 230 CE Sonderausstattung *220 CE special equipment, 230 CE CAT special equipment, 230 CE special equipment*	03.87 - 05.93	1005	1230	E2512-140	A, 7, 16, 20, 181			35	25-30					F2505001	F2518002	T
300 CE, 320 CE	03.87 - 05.93	1005	1230	E2512-140	A, 7, 20, 181			35	25-30					F2505001	F2518002	T
300 CE Sonderausstattung, 300 CE-24 Sonderausstattung, 320 CE *300 CE special equipment, 300 CE-24 special equipment, 320 CE*	03.87 - 05.93	1010	1170	E2517-140	A, 7, 16, 18, 20, 181			35	30-35					F2517001	F2504002	T
300 CE Sonderausstattung, 300 CE-24 Sonderausstattung, 320 CE *300 CE special equipment, 300 CE-24 special equipment, 320 CE*	03.87 - 05.93	1010	1230	E2518-140	A, 7, 16, 20, 181			35	25-30					F2517001	F2518002	T
E-KLASSE (W124) ***E-CLASS (W124)***																
Pro-Kit (Performance Fahrwerksfedern | *Performance Springs*)																
E 200, E 200 D, E 220	06.93 - 06.95	1005	1000	E2505-140	A, 7, 18, 20, 181			35	30-35					F2505001	F2504002	T
E 200, E 200 D, E 220	06.93 - 06.95	1005	1230	E2512-140	A, 7, 20, 181			35	25-30					F2505001	F2518002	T
E 200, E 220	12.84 - 06.95	1005	1230	E2512-140	A, 7, 16, 20, 181			35	25-30					F2505001	F2518002	T
E 200 D Sonderausstattung, E 250 D, E 250 Turbo-D *E 200 D special equipment, E 250 D, E 250 Turbo-D*	06.93 - 06.95	1010	1170	E2517-140	A, 7, 16, 18, 20, 181			35	30-35					F2517001	F2504002	T
E 280, E 300 D, E 300 Turbo-D, E 320	06.93 - 06.95	1010	1170	E2517-140	A, 7, 18, 20, 181			35	30-35					F2517001	F2504002	T
E 200 D Sonderausstattung *E 200 D special equipment*	06.93 - 06.95	1010	1230	E2518-140	A, 7, 16, 20, 181			35	25-30					F2517001	F2518002	T
E 250 D, E 250 Turbo-D, E 280, E 300 D, E 300 Turbo-D, E 320	06.93 - 06.95	1010	1230	E2518-140	A, 7, 20, 181			35	25-30					F2517001	F2518002	T

MERCEDES-BENZ

Modell *Model*	Baujahr *Year*	Achslast Vorne kg *Front Axle Load kg*	Achslast Hinten kg *Rear Axle Load kg*	Artikel-Nr. *Part-No.*	Hinweise *Notes*	ab Nachtrag ...xx BE *from suppl. ...xx of type approval*	bis Nachtrag ...xx BE *to suppl. ...xx of type approval*	ca. Tieferl. Vorne mm *ca. Lowering Front mm*	ca. Tieferl. Hinten mm *ca. Lowering Rear mm*	Ø Vorne mm *Ø Front mm*	Ø Hinten mm *Ø Rear mm*	Verstellbarkeit Vorne *Adjustable Front*	Verstellbarkeit Hinten *Adjustable Rear*	Ersatzteilbez. Vorne *Spare Part Marking Front*	Ersatzteilbez. Hinten *Spare Part Marking Rear*	Gutachten *Homologation*
E-KLASSE (W210) ***E-CLASS (W210)***																
Pro-Kit (Performance Fahrwerksfedern | *Performance Springs*)																
E 200, E 200 CDI, E 200 D, E 200 Kompressor, E 220 CDI, E 220 D, E 230, E 250 D, E 250 Turbo-D, E 270 CDI, E 290 Turbo-D	06.95 - 03.02	1095	1165	E2536-140	A, 7, 18, 20, 68, 181			35	30					F2536001	F2536002	T
E 200, E 200 CDI, E 200 D, E 200 Kompressor, E 220 CDI, E 220 D, E 230, E 250 D, E 250 Turbo-D, E 270 CDI, E 290 Turbo-D	06.95 - 03.02	1095	1165	E2538-140	A, 7, 20, 68, 181			35	30					F2536001	F2538002	T
E 280	12.96 - 03.02	1095	1165	E2557-140	A, 7, 18, 20, 68, 181			20	30					F2536001	F2536002	T
E 240, E 280, E 320, E 320 CDI, E 430	12.96 - 03.02	1095	1165	E2559-140	A, 7, 20, 68, 181			35	30					F2536001	F2538002	T
E 240, E 280, E 300 D, E 300 Turbo-D, E 320, E 420, E 430	06.95 - 03.02	1095	1165	E2537-140	A, 7, 18, 20, 68, 181			35	30					F2537001	F2536002	T
E 240, E 280, E 300 D, E 300 Turbo-D, E 320, E 420, E 430	06.95 - 03.02	1095	1165	E2539-140	A, 7, 20, 68, 181			35	30					F2537001	F2538002	T
E 240, E 320, E 320 CDI, E 430	06.97 - 03.02	1095	1165	E2557-140	A, 7, 18, 20, 68, 181			35	30					F2536001	F2536002	T
B12 Pro-Kit (Performance Komplettfahrwerke | *Performance Springs+Shocks*)																
E 200, E 200 CDI, E 200 D, E 200 Kompressor, E 220 D, E 270 CDI	07.99 - 03.02	1095	1165	E90-25-004-02-22	A, 7, 18, 20, 68, 78, 149, 161, 181			35	30					F2536001	F2536002	T
E 220 CDI	07.99 - 03.02	1095	1165	E90-25-004-02-22	A, 7, 18, 20, 68, 78, 148, 161, 181			35	30					F2536001	F2536002	T
E 200, E 200 CDI, E 200 D, E 200 Kompressor, E 220 CDI, E 220 D, E 230, E 250 D, E 250 Turbo-D, E 290 Turbo-D	06.95 - 06.99	1095	1165	E90-25-004-01-22	A, 7, 18, 20, 68, 78, 116, 161, 181			35	30					F2536001	F2536002	T
E240, E280, E320, E420, E430, E320 CDI, alle mit V-Motor	07.99 - 03.02	1095	1165	E90-25-004-04-22	A, 7, 18, 20, 68, 78, 149, 161, 181			35	30					F2537001	F2536002	T
E240, E280, E320, E420, E430, E300 D, E300 TD, alle ohne V-Motor	06.95 - 06.99	1095	1165	E90-25-004-03-22	A, 7, 18, 20, 68, 78, 116, 161, 181			35	30					F2537001	F2536002	T
E-KLASSE (W211) ***E-CLASS (W211)***																
Pro-Kit (Performance Fahrwerksfedern | *Performance Springs*)																
E 200 CDI, E 200 CGI, E 200 Kompressor, E 220 CDI, E 230, E 240, E 280, E 300 BlueTEC, E 320, E 350, E 350 CGI	03.02 - 12.08	1095	1230	E10-25-008-01-22	A, 7, 18, 20, 181			30-35	30					F11-25-008-01-VA	F11-25-008-01-HA	T
E 220 CDI, E 250 CDI, E 270 CDI, E 280 CDI, E 320 CDI	03.02 - 12.08	1160	1230	E10-25-008-02-22	A, 7, 18, 20, 181			35-40	30					F11-25-008-02-VA	F11-25-008-01-HA	T
Anti-Roll-Kit (Performance Stabilisatoren | *Performance Sway Bars*)																
E 200 CDI, E 200 CGI, E 200 Kompressor, E 220 CDI, E 230, E 240, E 250 CDI, E 270 CDI, E 280, E 280 CDI, E 300 BlueTEC, E 320, E 320 CDI, E 350, E 350 CGI	03.02 - 12.08			E40-25-008-01-11	A, 18, 20, 22, 45					34	21	nicht verstellbar *not adjustable*	nicht verstellbar *not adjustable*	AS41-25-008-01-VA	AS41-25-008-01-HA	T
B12 Pro-Kit (Performance Komplettfahrwerke | *Performance Springs+Shocks*)																
E 200 CDI, E 200 CGI, E 200 Kompressor, E 220 CDI, E 240, E 350	03.02 - 12.08	1095	1230	E90-25-008-01-22	A, 7, 18, 20, 78, 119, 161, 181			30-35	30					F11-25-008-01-VA	F11-25-008-01-HA	T
E 200 CDI, E 200 CGI, E 200 Kompressor, E 220 CDI, E 240, E 350	03.02 - 12.08	1095	1230	E90-25-008-01-22	A, 7, 18, 20, 78, 119, 161, 181			15-20	15					F11-25-008-01-VA	F11-25-008-01-HA	T
E 220 CDI, E 270 CDI, E 320, E 320 CDI	03.02 - 12.08	1160	1230	E90-25-008-02-22	A, 7, 18, 20, 78, 119, 161, 181			35-40	30					F11-25-008-02-VA	F11-25-008-01-HA	T
E 220 CDI, E 270 CDI, E 320, E 320 CDI	03.02 - 12.08	1160	1230	E90-25-008-02-22	A, 7, 18, 20, 78, 119, 161, 181			20-25	15					F11-25-008-02-VA	F11-25-008-01-HA	T
E-KLASSE (W212) ***E-CLASS (W212)***																
Pro-Kit (Performance Fahrwerksfedern | *Performance Springs*)																
E200, E200 CGI, E250, E250 CGI	01.09 -	1055	1275	E10-25-021-01-22	A, 7, 18, 20, 181			30	30					F11-25-021-01-VA	F11-25-021-01-HA	T
E 200 CDI, E 220 CDI, E 250 CDI, E 300, E 300 CDI, E 350, E 350 BlueTEC, E 350 CDI, E 350 CGI, E 400	01.09 -	1220	1275	E10-25-021-02-22	A, 7, 18, 20, 181			30	30					F11-25-021-02-VA	F11-25-021-01-HA	T
B12 Pro-Kit (Performance Komplettfahrwerke | *Performance Springs+Shocks*)																
E200, E200 CGI, E250, E250 CGI	01.09 -	1055	1275	E90-25-021-01-22	A, 7, 18, 20, 78, 88, 161			30	30					F11-25-021-01-VA	F11-25-021-01-HA	T
E200, E200 CGI, E250, E250 CGI	01.09 -	1055	1275	E90-25-021-01-22	A, 7, 18, 20, 78, 118, 161			15	15					F11-25-021-01-VA	F11-25-021-01-HA	T
E300, E350, E350 CGI, E400, E200 CDI, E220 CDI, E250 CDI, E300 CDI, E350 CDI, E350 BlueTEC	01.09 -	1200	1275	E90-25-021-02-22	A, 7, 18, 20, 78, 88, 161, 181			30	30					F11-25-021-02-VA	F11-25-021-01-HA	T
E300, E350, E350 CGI, E400, E200 CDI, E220 CDI, E250 CDI, E300 CDI, E350 CDI, E350 BlueTEC	01.09 -	1200	1275	E90-25-021-02-22	A, 7, 18, 20, 78, 118, 161, 181			15	15					F11-25-021-02-VA	F11-25-021-01-HA	T
E-KLASSE Cabriolet (A207) ***E-CLASS Convertible (A207)***																
Pro-Kit (Performance Fahrwerksfedern | *Performance Springs*)																
E 200, E 200 CGI, E 250, E 250 CGI	01.10 -	1150	1200	E10-25-019-01-22	A, 7, 18, 20, 181			30	30					F11-25-019-01-VA	F11-25-019-01-HA	T
E300, E350, E350 CGI, E220 CDI, E220 BlueTEC, E250 CDI, E350 CDI, E350 BlueTEC	01.10 -	1150	1200	E10-25-019-02-22	A, 7, 18, 20, 181			30	30					F11-25-019-02-VA	F11-25-019-01-HA	T
B12 Pro-Kit (Performance Komplettfahrwerke | *Performance Springs+Shocks*)																
E 200 CGI, E 250 CGI	01.10 -	1150	1200	E90-25-019-01-22	A, 7, 18, 20, 21, 78, 161			30	30					F11-25-019-01-VA	F11-25-019-01-HA	T
E300, E350, E350 CGI, E220 CDI, E220 BlueTEC, E250 CDI, E350 CDI, E350 BlueTEC	01.10 -	1150	1200	E90-25-019-02-22	A, 7, 18, 20, 21, 78, 161			30	30					F11-25-019-02-VA	F11-25-019-01-HA	T
Pro-Street-S (Gewindefahrwerke - höhenverstellbar | *Coil-Overs-Adjustable Ride Hight*)																
E200, E200 CGI, E250, E250 CGI	01.10 -	1050	1245	PSS65-25-019-07-22	A, 18, 25, 45, 160, 181			20-45	15-45							
E300, E350, E350 CGI, E220 CDI, E220 BlueTEC, E250 CDI, E350 CDI, E350 BlueTEC	01.10 -	1145	1245	PSS65-25-019-08-22	A, 18, 25, 45, 160, 181			20-45	15-45							

MERCEDES-BENZ

Modell *Model*	Baujahr *Year*	Achslast Vorne kg *Front Axle Load kg*	Achslast Hinten kg *Rear Axle Load kg*	Artikel-Nr. *Part-No.*	Hinweise *Notes*	ab Nachtrag ...xx BE *from suppl. ...xx of type approval*	bis Nachtrag ...xx BE *to suppl. ...xx of type approval*	ca. Tieferl. Vorne mm *ca. Lowering Front mm*	ca. Tieferl. Hinten mm *ca. Lowering Rear mm*	Ø Vorne mm *Ø Front mm*	Ø Hinten mm *Ø Rear mm*	Verstellbarkeit Vorne *Adjustable Front*	Verstellbarkeit Hinten *Adjustable Rear*	Ersatzteilbez. Vorne *Spare Part Marking Front*	Ersatzteilbez. Hinten *Spare Part Marking Rear*	Gutachten *Homologation*
E-KLASSE Coupe (C124) ***E-CLASS Coupe (C124)***																
Pro-Kit (Performance Fahrwerksfedern | *Performance Springs*)																
E 200, E 220	06.93 - 06.97	930	985	E2504-140	A, 7, 18, 20, 181			35	30-35					F2504001	F2504002	T
E 200, E 220	06.93 - 06.97	950	1230	E2511-140	A, 7, 20, 181			35	25-30					F2504001	F2518002	T
E 320	06.93 - 06.97	1005	1000	E2505-140	A, 7, 18, 20, 181			35	30-35					F2505001	F2504002	T
E 320	06.93 - 06.97	1005	1230	E2512-140	A, 7, 20, 181			35	25-30					F2505001	F2518002	T
E 320 Sonderausstattung *E 320 special equipment*	06.93 - 06.97	1010	1170	E2517-140	A, 7, 16, 18, 20, 181			35	30-35					F2517001	F2504002	T
E 320 Sonderausstattung *E 320 special equipment*	06.93 - 06.97	1010	1230	E2518-140	A, 7, 16, 20, 181			35	25-30					F2517001	F2518002	T
E-KLASSE Coupe (C207) ***E-CLASS Coupe (C207)***																
Pro-Kit (Performance Fahrwerksfedern | *Performance Springs*)																
E 200, E 200 CGI, E 250, E 250 CGI	01.09 -	1150	1200	E10-25-019-01-22	A, 7, 18, 20, 181			30	30					F11-25-019-01-VA	F11-25-019-01-HA	T
E300, E350, E350 CGI, E220 CDI, E220 BlueTEC, E250 CDI, E350 CDI, E350 BlueTEC	01.09 -	1150	1200	E10-25-019-02-22	A, 7, 18, 20, 181			30	30					F11-25-019-02-VA	F11-25-019-01-HA	T
B12 Pro-Kit (Performance Komplettfahrwerke | *Performance Springs+Shocks*)																
E 200, E 200 CGI, E 250, E 250 CGI	01.09 -	1150	1200	E90-25-019-01-22	A, 7, 18, 20, 21, 78, 161, 181			30	30					F11-25-019-01-VA	F11-25-019-01-HA	T
E300, E350, E350 CGI, E220 CDI, E220 BlueTEC, E250 CDI, E350 CDI, E350 BlueTEC	01.09 -	1150	1200	E90-25-019-02-22	A, 7, 18, 20, 21, 78, 161			30	30					F11-25-019-02-VA	F11-25-019-01-HA	T
Pro-Street-S (Gewindefahrwerke - höhenverstellbar | *Coil-Overs-Adjustable Ride Hight*)																
E 200, E 200 CGI, E 250, E 250 CGI	01.09 -	1050	1245	PSS65-25-019-02-22	A, 18, 25, 45, 160, 181			20-45	15-45							T
E300, E350, E350 CGI, E220 CDI, E220 BlueTEC, E250 CDI, E350 CDI, E350 BlueTEC	01.09 -	1145	1245	PSS65-25-019-03-22	A, 18, 25, 45, 160, 181			20-45	15-45							T
E-CLASS Kombi (S124) ***E-CLASS Estate (S124)***																
Pro-Kit (Performance Fahrwerksfedern | *Performance Springs*)																
E 200 T, E 220 T, E 280 T, E 320 T	06.93 - 06.96	1005	1230	E2512-140	A, 7, 20, 181			35	25-30					F2505001	F2518002	T
300 TD T	06.92 - 05.93	1010	1230	E2518-140	A, 7, 20, 181			35	25-30					F2517001	F2518002	T
E 280 T Sonderausstattung, E 320 T Sonderausstattung *E 280 T special equipment, E 320 T special equipment*	06.93 - 06.96	1010	1230	E2518-140	A, 7, 16, 20, 181			35	25-30					F2517001	F2518002	T
E-CLASS Kombi (S210) ***E-CLASS Estate (S210)***																
Pro-Kit (Performance Fahrwerksfedern | *Performance Springs*)																
E 200 T, E 200 T Kompressor, E 220 T CDI, E 230 T, E 250 T D, E 250 T Turbo-D, E 270 T CDI	06.96 - 03.03	1095	1300	E2536-140	A, 7, 20, 181			35	30					F2536001	F2536002	T
E 240 T V-Motor, E 280 T V-Motor, E 320 T V-Motor, E 430 T V-Motor	12.96 - 03.03	1095	1300	E2557-140	A, 7, 20, 181			35	30					F2536001	F2536002	T
E 240 T, E 280 T, E 290 T Turbo-D, E 300 T Turbo-D, E 320 T, E 320 T CDI, E 420 T, E 430 T	06.96 - 03.03	1095	1300	E2537-140	A, 7, 20, 181			35	30					F2537001	F2536002	T
E-CLASS T-Model (S211)																
Pro-Kit (Performance Fahrwerksfedern | *Performance Springs*)																
E 200 CDI, E 200 Kompressor, E 200 T Kompressor, E 220 CDI, E 220 T CDI, E 230 T, E 240 T, E 280 T, E 320 T, E 350 T	03.03 - 07.09	1095	1230	E10-25-008-05-20	A, 7, 20, 181			30-35	30					F11-25-008-01-VA	Luftfederverstellung *air suspension*	T
350 CGI, E 220 CDI, E 220 T CDI, E 270 T CDI, E 280 T CDI, E 320 T, E 320 T CDI, E 350 T	03.03 - 07.09	1160	1230	E10-25-008-06-20	A, 7, 20, 181			30-35	30					F11-25-008-02-VA	Luftfederverstellung *air suspension*	T
Anti-Roll-Kit (Performance Stabilisatoren | *Performance Sway Bars*)																
350 CGI, E 200 CDI, E 200 Kompressor, E 200 T Kompressor, E 220 CDI, E 220 T CDI, E 230 T, E 240 T, E 270 T CDI, E 280 T, E 280 T CDI, E 320 T, E 320 T CDI, E 350 T	03.03 - 07.09			E40-25-008-05-11	A, 20, 22, 45					34	21	nicht verstellbar *not adjustable*	nicht verstellbar *not adjustable*	AS41-25-008-01-VA	AS41-25-008-01-HA	T
B12 Pro-Kit (Performance Komplettfahrwerke | *Performance Springs+Shocks*)																
E 200 T Kompressor, E 220 CDI, E 220 T CDI, E 230 T, E 240 T, E 350 T	03.03 - 07.09	1095	1230	E90-25-008-03-20	A, 7, 20, 78, 161			30-35	30					F11-25-008-01-VA	BI-24-069076	T
E 220 T CDI, E 270 T CDI, E 280 T CDI, E 320 T, E 320 T CDI, E 350 T	03.03 - 07.09	1160	1230	E90-25-008-04-20	A, 7, 20, 78, 161			30-35	30					F11-25-008-02-VA	BI-24-069076	T
E-CLASS T-Model (S212)																
Pro-Kit (Performance Fahrwerksfedern | *Performance Springs*)																
E 200, E 200 CGI, E 250, E 250 CGI	11.09 -	1055	1460	E10-25-021-04-22	A, 7, 20, 181			30	30					F11-25-021-01-VA	AZ-45-25-021-04-01	T
E 200 CDI, E 220 CDI, E 250 CDI, E 300, E 300 CDI, E 350, E 350 BlueTEC, E 350 CDI, E 350 CGI, E 400	08.09 -	1220	1460	E10-25-021-05-22	A, 7, 20, 181			30	30					F11-25-021-02-VA	AZ-45-25-021-04-01	T
B12 Pro-Kit (Performance Komplettfahrwerke | *Performance Springs+Shocks*)																
E 200, E 200 CGI, E 250, E 250 CGI	08.09 -	1055	1460	E90-25-021-07-22	A, 7, 20, 78, 161, 181, 193			30	30							T
E 200 CDI, E 220 CDI, E 250 CDI, E 300, E 300 CDI, E 350, E 350 BlueTEC, E 350 CDI, E 350 CGI, E 400	08.09 -	1220	1460	E90-25-021-08-22	A, 7, 20, 78, 161, 181, 193			30	30							T
GLA-KLASSE (X156) ***GLA-CLASS (X156)***																
Pro-Kit (Performance Fahrwerksfedern | *Performance Springs*)																
GLA 180, GLA 200, GLA 250	12.13 -	1055	950	E10-25-035-02-22	A, 18, 181			30	30					F11-25-035-01-VA	F11-25-031-01-HA	T
GLA 180 CDI, GLA 200 CDI, GLA 220 CDI	12.13 -	1125	950	E10-25-031-01-22	A, 18, 181			30	30					F11-25-031-01-VA	F11-25-031-01-HA	T
GLA 250 4-matic, GLA 200 CDI 4-matic, GLA 220 CDI 4-matic	12.13 -	1125	950	E10-25-035-01-22	A, 12, 18, 181			30	30					F11-25-031-01-VA	F11-25-035-01-HA	T
GLA 250 4-matic	12.13 -	1055	950	E10-25-035-02-22	A, 18, 181			20	20					F11-25-035-01-VA	F11-25-031-01-HA	T
GLA 200 CDI 4-matic GLA 220 CDI 4-matic	12.13 -	1125	950	E10-25-031-01-22	A, 18, 181			20	20					F11-25-031-01-VA	F11-25-031-01-HA	T

MERCEDES-BENZ

Modell	Baujahr	Achslast Vorne kg	Achslast Hinten kg	Artikel-Nr.	Hinweise	ab Nachtrag ...xx BE	bis Nachtrag ...xx BE	ca. Tieferl. Vorne mm	ca. Tieferl. Hinten mm	Ø Vorne mm	Ø Hinten mm	Verstellbarkeit Vorne	Verstellbarkeit Hinten	Ersatzteilbez. Vorne	Ersatzteilbez. Hinten	Gutachten
Model	*Year*	*Front Axle Load kg*	*Rear Axle Load kg*	*Part-No.*	*Notes*	*from suppl. ...xx of type approval*	*to suppl. ...xx of type approval*	*ca. Lowering Front mm*	*ca. Lowering Rear mm*	*Ø Front mm*	*Ø Rear mm*	*Adjustable Front*	*Adjustable Rear*	*Spare Part Marking Front*	*Spare Part Marking Rear*	*Homologation*
GLA-KLASSE (X156)																
GLA-CLASS (X156)																
Pro-Lift-Kit (Performance Höherlegung | *Performance Lift Springs*)																
GLA 180, GLA 200, GLA 250, GLA 180 CDI, GLA 200 CDI, GLA 220 CDI, GLA 250 4-matic, GLA 200 CDI 4-matic, GLA 220 CDI 4-matic	12.13 -	1125	950	E30-25-035-01-22	A, 18, 181, 215			+30-40	+25					F31-25-035-01-VA	F31-25-031-01-HA	T
Anti-Roll-Kit (Performance Stabilisatoren | *Performance Sway Bars*)																
GLA 180, GLA 200, GLA 250, GLA 180 CDI, GLA 200 CDI, GLA 220 CDI	12.13 -			E40-25-033-01-11	A, 18, 20, 22, 45					28	24	2-fach verstellbar *2-way adjustable*	2-fach verstellbar *2-way adjustable*	AS41-25-033-01-VA	AS41-25-033-01-HA	T
GLA 250 4-matic, GLA 200 CDI 4-matic, GLA 220 CDI 4-matic, GLA 45 AMG 4-matic	12.13 -			E40-25-033-02-11	A, 18, 22, 45					28	24	2-fach verstellbar *2-way adjustable*	2-fach verstellbar *2-way adjustable*	AS41-25-033-01-VA	AS41-25-033-02-HA	T
KOMBI Kombi (S124)																
KOMBI Estate (S124)																
Pro-Kit (Performance Fahrwerksfedern | *Performance Springs*)																
200 E, 200 T, 200 T D, 200 TE, 230 TE, 230 TE KAT, 250 T D *200 E, 200 T, 200 T D, 200 TE, 230 TE, 230 TE CAT, 250 T D*	09.85 - 06.93	950	1230	E2511-140	A, 7, 20, 181			35	25-30					F2504001	F2518002	T
200 E Sonderausstattung, 200 T D Sonderausstattung, 200 T Sonderausstattung, 200 TE Sonderausstattung, 220 TE, 230 TE KAT Sonderausstattung, 230 TE Sonderausstattung *200 E special equipment, 200 T D special equipment, 200 T special equipment, 200 TE special equipment, 220 TE, 230 TE CAT special equipment, 230 TE special equipment*	09.85 - 06.93	1005	1230	E2512-140	A, 7, 16, 20, 181			35	25-30					F2505001	F2518002	T
250 T D Sonderausstattung, 300 T D, 300 TE, 300 TE-24, 320 TE *250 T D special equipment, 300 T D, 300 TE, 300 TE-24, 320 TE*	09.85 - 06.93	1005	1230	E2512-140	A, 7, 20, 181			35	25-30					F2505001	F2518002	T
250 T D, 280 TE, 300 T D Sonderausstattung, 300 T Turbo-D, 300 TD T, 300 TE Sonderausstattung, 300 TE-24 Sonderausstattung, 320 TE Sonderausstattung *250 T D, 280 TE, 300 T D special equipment, 300 T Turbo-D, 300 TD T, 300 TE special equipment, 300 TE-24 special equipment, 320 TE special equipment*	09.85 - 06.93	1010	1230	E2518-140	A, 7, 16, 20, 181			35	25-30					F2517001	F2518002	T
M-KLASSE (W163)																
M-CLASS (W163)																
Pro-Kit (Performance Fahrwerksfedern | *Performance Springs*)																
ML 230, ML 270 CDI, ML 320, ML 350, ML 430	02.98 - 06.05	1430	1600	E2558-120	A, 7, 18, 181			35	30					Drehstabverstellung *torsion bar*	F2558002	T
M-KLASSE (W164)																
M-CLASS (W164)																
Pro-Kit (Performance Fahrwerksfedern | *Performance Springs*)																
ML 280 CDI 4-matic, ML 300 CDI 4-matic, ML 320 CDI 4-matic, ML 350 4-matic	07.05 -	1400	1600	E10-25-017-01-22	A, 7, 18, 181			35	35					F11-25-017-01-VA	F11-25-017-01-HA	T
B12 Pro-Kit (Performance Komplettfahrwerke | *Performance Springs+Shocks*)																
ML 280 CDI 4-matic, ML 320 CDI 4-matic, ML 350 4-matic	07.05 -	1400	1600	E90-25-017-01-22	A, 7, 18, 78, 98, 161			35	35					F11-25-017-01-VA	F11-25-017-01-HA	T
M-KLASSE (166)																
M-CLASS (166)																
Pro-Kit (Performance Fahrwerksfedern | *Performance Springs*)																
ML300 4-matic, ML350 4-matic, ML250 CDI, ML250 CDI BlueTEC 4-matic, ML350 BlueTEC 4-matic	06.11 -	1450	1600	E10-25-030-01-22	A, 7, 18, 181			30-35	25-35					F11-25-030-01-VA	F11-25-030-01-HA	T
B12 Pro-Kit (Performance Komplettfahrwerke | *Performance Springs+Shocks*)																
ML300 4-matic, ML350 4-matic, ML250 CDI, ML250 CDI BlueTEC 4-matic, ML350 BlueTEC 4-matic	06.11 -	1450	1600	E90-25-030-01-22	A, 7, 18, 78, 161, 181, 193			30-35	25-35					F11-25-030-01-VA	F11-25-030-01-HA	T
R-KLASSE (W251, V251)																
R-CLASS (W251, V251)																
Pro-Kit (Performance Fahrwerksfedern | *Performance Springs*)																
R 280 CDI, R 280 CDI 4-matic, R 300 CDI, R 300 CDI 4-matic, R 320 CDI 4-matic, R 350, R 350 4-matic, R 500 4-matic	01.06 -	1370	1700	E10-25-018-01-20	A, 7, 59, 181			30	30					F11-25-018-01-VA	Luftfederverstellung *air suspension*	T
S-KLASSE (W126)																
S-CLASS (W126)																
Pro-Kit (Performance Fahrwerksfedern | *Performance Springs*)																
260 SE, 280 S, 280 SE,SEL, 300 SE,SEL, 380 SE,SEL	10.79 - 06.91	1110	1160	E2506-140	A, 7, 18, 20, 181			40-45	30-35					F2506001	F2506002	T
B12 Pro-Kit (Performance Komplettfahrwerke | *Performance Springs+Shocks*)																
260 SE, 280 S, 280 SE,SEL, 300 SE,SEL, 380 SE,SEL	10.79 - 06.91	1110	1160	E90-25-024-01-22	A, 7, 18, 20, 78, 161			40-45	30-35					F2506001	F2506002	T
S-KLASSE Coupe (C126)																
S-CLASS Coupe (C126)																
Pro-Kit (Performance Fahrwerksfedern | *Performance Springs*)																
380 SEC	10.81 - 07.85	1110	1160	E2506-140	A, 7, 18, 20, 181			40-45	30-35					F2506001	F2506002	T
B12 Pro-Kit (Performance Komplettfahrwerke | *Performance Springs+Shocks*)																
380 SEC	10.81 - 07.85	1110	1160	E90-25-024-01-22	A, 7, 18, 20, 78, 161, 181			40-45	30-35					F2506001	F2506002	T
SL (R129)																
Pro-Kit (Performance Fahrwerksfedern | *Performance Springs*)																
280, 300 SL, 300 SL-24, 320, 500, 500 SL	03.89 - 10.01	1080	1190	E2534-140	A, 7, 18, 20, 181			30	30					F2534001	F2534002	T
B12 Pro-Kit (Performance Komplettfahrwerke | *Performance Springs+Shocks*)																
280, 320, 500	09.92 - 10.01	1080	1190	E90-25-028-01-22	A, 7, 18, 20, 78, 161			30	30					F2534001	F2534002	T
300 SL, 300 SL-24, 500 SL	02.92 - 08.93	1080	1190	E90-25-028-01-22	A, 7, 18, 20, 78, 150, 161			30	30					F2534001	F2534002	T
SL (R230)																
Pro-Kit (Performance Fahrwerksfedern | *Performance Springs*)																
350	03.03 - 01.12	1025	1135	E10-25-009-02-22	A, 7, 18, 20, 181			30	30					F11-25-009-02-VA	F11-25-009-02-HA	T
SL (R231)																
Pro-Kit (Performance Fahrwerksfedern | *Performance Springs*)																
SL350, SL400	02.12 -	1075	1150	E10-25-032-01-22	A, 18, 20, 181			25	25					F11-25-032-01-VA	F11-25-032-01-HA	T
500	01.12 -	1075	1150	E10-25-032-02-22	A, 18, 20, 181			25	25					F11-25-032-01-VA	F11-25-032-01-HA	T

MERCEDES-BENZ

Modell *Model*	Baujahr *Year*	Achslast Vorne kg *Front Axle Load kg*	Achslast Hinten kg *Rear Axle Load kg*	Artikel-Nr. *Part-No.*	Hinweise *Notes*	ab Nachtrag ...xx BE *from suppl. ...xx of type approval*	bis Nachtrag ...xx BE *to suppl. ...xx of type approval*	ca. Tieferl. Vorne mm *ca. Lowering Front mm*	ca. Tieferl. Hinten mm *ca. Lowering Rear mm*	Ø Vorne mm *Ø Front mm*	Ø Hinten mm *Ø Rear mm*	Verstellbarkeit Vorne *Adjustable Front*	Verstellbarkeit Hinten *Adjustable Rear*	Ersatzteilbez. Vorne *Spare Part Marking Front*	Ersatzteilbez. Hinten *Spare Part Marking Rear*	Gutachten *Homologation*
SL (R231)																
B12 Pro-Kit (Performance Komplettfahrwerke | *Performance Springs+Shocks*)																
SL350, SL400	02.12 -	1075	1150	E90-25-032-01-22	A, 18, 20, 78, 161, 181			25	25					F11-25-032-01-VA	F11-25-032-01-HA	T
SL 500	01.12 -	1075	1150	E90-25-032-02-22	A, 18, 20, 78, 161, 181			25	25					F11-25-032-01-VA	F11-25-032-01-HA	T
SLK (R170)																
Pro-Kit (Performance Fahrwerksfedern | *Performance Springs*)																
200, 200 Kompressor, 230 Kompressor, 320	09.96 - 04.04	845	820	E2552-140	A, 7, 18, 20, 181			30	30					F2552101	F2552102	T
B12 Pro-Kit (Performance Komplettfahrwerke | *Performance Springs+Shocks*)																
200, 200 Kompressor, 230 Kompressor, 320	09.96 - 04.04	845	820	E90-25-003-01-22	A, 7, 18, 20, 78, 161			30	30					F2552101	F2552102	T
SLK (R171)																
Pro-Kit (Performance Fahrwerksfedern | *Performance Springs*)																
280, 300, 350	06.04 - 02.11	910	940	E10-25-013-02-22	A, 7, 18, 20, 181			25	25					F11-25-013-02-VA	F11-25-013-01-HA	T
200 Kompressor	03.04 - 02.11	840	940	E10-25-013-01-22	A, 7, 18, 20, 181			25	25					F11-25-013-01-VA-1	F11-25-013-01-HA	T
B12 Pro-Kit (Performance Komplettfahrwerke | *Performance Springs+Shocks*)																
200 Kompressor	03.04 - 02.11	840	940	E90-25-013-01-22	A, 7, 18, 20, 78, 161			25	25					F11-25-013-01-VA-1	F11-25-013-01-HA	T
280, 300, 350	06.04 - 02.11	910	940	E90-25-013-02-22	A, 7, 18, 20, 78, 161			25	25					F11-25-013-02-VA	F11-25-013-01-HA	T
SLK (R172)																
Pro-Kit (Performance Fahrwerksfedern | *Performance Springs*)																
200, 250	02.11 -	940	970	E10-25-026-01-22	A, 7, 18, 20, 181			25-30	25					F11-25-026-01-VA	F11-25-026-01-HA	T
250 CDI, 350, 55 AMG	02.11 -	940	970	E10-25-026-02-22	A, 7, 18, 20, 182			25	25					F11-25-026-02-VA	F11-25-026-01-HA	T
B12 Pro-Kit (Performance Komplettfahrwerke | *Performance Springs+Shocks*)																
200, 250	02.11 -	940	970	E90-25-026-01-22	A, 7, 18, 20, 78, 161, 181			25-30	25					F11-25-026-01-VA	F11-25-026-01-HA	T
250 CDI, 350, 55 AMG	02.11 -	940	970	E90-25-026-02-22	A, 7, 18, 20, 78, 161, 182			25	25					F11-25-026-02-VA	F11-25-026-01-HA	T
Stufenheck (W124) ***Saloon (W124)***																
Pro-Kit (Performance Fahrwerksfedern | *Performance Springs*)																
200, 200 D, 200 E, 230 E, 230 E KAT *200, 200 D, 200 E, 230 E, 230 E CAT*	12.84 - 06.93	930	985	E2504-140	A, 7, 18, 20, 181			35	30-35					F2504001	F2504002	T
200, 200 D, 200 E, 230 E, 230 E KAT *200, 200 D, 200 E, 230 E, 230 E CAT*	12.84 - 06.93	950	1230	E2511-140	A, 7, 20, 181			35	25-30					F2504001	F2518002	T
200 D Sonderausstattung, 200 E Sonderausstattung, 200 Sonderausstattung, 220 E, 230 E KAT Sonderausstattung, 230 E Sonderausstattung *200 D special equipment, 200 E special equipment, 200 special equipment, 220 E, 230 E CAT special equipment, 230 E special equipment*	12.84 - 06.93	1005	1000	E2505-140	A, 7, 16, 18, 20, 181			35	30-35					F2505001	F2504002	T
250 D, 250 Turbo-D, 260 E, 280 E, 300 D, 300 E, 300 E-24, 300 Turbo-D	12.84 - 06.93	1005	1000	E2505-140	A, 7, 18, 20, 181			35	30-35					F2505001	F2504002	T
200 D Sonderausstattung, 200 E Sonderausstattung, 200 Sonderausstattung, 220 E, 230 E KAT Sonderausstattung, 230 E Sonderausstattung *200 D special equipment, 200 E special equipment, 200 special equipment, 220 E, 230 E CAT special equipment, 230 E special equipment*	12.84 - 06.93	1005	1230	E2512-140	A, 7, 16, 20, 181			35	25-30					F2505001	F2518002	T
250 D, 250 Turbo-D, 260 E, 300 D, 300 E	12.84 - 06.93	1005	1230	E2512-140	A, 7, 20, 181			35	25-30					F2505001	F2518002	T
250 D Sonderausstattung, 250 Turbo-D Sonderausstattung, 260 E Sonderausstattung, 280 E Sonderausstattung, 300 D Sonderausstattung, 300 E Sonderausstattung, 300 E-24 Sonderausstattung, 300 Turbo-D Sonderausstattung *250 D special equipment, 250 Turbo-D special equipment, 260 E special equipment, 280 E special equipment, 300 D special equipment, 300 E special equipment, 300 E-24 special equipment, 300 Turbo-D special equipment*	12.84 - 06.93	1010	1170	E2517-140	A, 7, 16, 18, 20, 181			35	30-35					F2517001	F2504002	T
320 E	10.92 - 06.93	1010	1170	E2517-140	A, 7, 18, 20, 181			35	30-35					F2517001	F2504002	T
250 D Sonderausstattung, 250 Turbo-D Sonderausstattung, 260 E Sonderausstattung, 280 E Sonderausstattung, 300 D Sonderausstattung, 300 E Sonderausstattung, 300 E-24 Sonderausstattung, 300 Turbo-D Sonderausstattung, 320 E *250 D special equipment, 250 Turbo-D special equipment, 260 E special equipment, 280 E special equipment, 300 D special equipment, 300 E special equipment, 300 E-24 special equipment, 300 Turbo-D special equipment, 320 E*	12.84 - 06.93	1010	1230	E2518-140	A, 7, 16, 20, 181			35	25-30					F2517001	F2518002	T
280E, 300E-24, 320E, 300D-Turbo	12.82 - 06.93	1010	1230	E2517-140	A, 7, 20, 181			35	25-30					F2517001	F2518002	T
VIANO (W639)																
Pro-Kit (Performance Fahrwerksfedern | *Performance Springs*)																
3,0, 3.2, 3.5, 3.7, CDI 2.0, CDI 2.2	09.03 - 08.10	1550	1550	E10-25-014-01-22	A, 18, 20, 181			30	30					F11-25-014-01-VA	F11-25-014-01-HA	T
3,0, 3.2, 3.5, 3.7, CDI 2.0, CDI 2.2	09.03 - 08.10	1550	1550	E10-25-014-05-22	A, 20, 59, 181			30	30					F11-25-014-01-VA	Luftfederverstellung *air suspension*	T
3.5, CDI 2.0, CDI 2.0 4-matic, CDI 2.2, CDI 2.2 4-matic, CDI 3.0	09.10 -	1550	1700	E10-25-022-01-22	A, 181			30	30					F11-25-022-02-VA	F11-25-022-01-HA	T
3.5, CDI 2.0, CDI 2.0 4-matic, CDI 2.2, CDI 2.2 4-matic, CDI 3.0	09.10 -	1550	1700	E10-25-022-02-22	A, 59, 181			30	30					F11-25-022-02-VA	Luftfederverstellung *air suspension*	T
VITO / MIXTO Kasten (W639) ***VITO / MIXTO Box (W639)***																
Pro-Kit (Performance Fahrwerksfedern | *Performance Springs*)																
109 CDI, 111 CDI, 115 CDI, 119, 120 CDI, 122, 123, 126	09.03 - 08.10	1550	1550	E10-25-014-01-22	A, 18, 20, 181			30	30					F11-25-014-01-VA	F11-25-014-01-HA	T
109 CDI, 111 CDI, 115 CDI, 119, 120 CDI, 122, 123, 126	09.03 - 08.10	1550	1550	E10-25-014-05-22	A, 20, 59, 181			30	30					F11-25-014-01-VA	Luftfederverstellung *air suspension*	T

MERCEDES-BENZ

MINI

Modell *Model*	Baujahr *Year*	Achslast Vorne kg *Front Axle Load kg*	Achslast Hinten kg *Rear Axle Load kg*	Artikel-Nr. *Part-No.*	Hinweise *Notes*	ab Nachtrag ...xx BE *from suppl. ...xx of type approval*	bis Nachtrag ...xx BE *to suppl. ...xx of type approval*	ca. Tieferl. Vorne mm *ca. Lowering Front mm*	ca. Tieferl. Hinten mm *ca. Lowering Rear mm*	Ø Vorne mm *Ø Front mm*	Ø Hinten mm *Ø Rear mm*	Verstellbarkeit Vorne *Adjustable Front*	Verstellbarkeit Hinten *Adjustable Rear*	Ersatzteilbez. Vorne *Spare Part Marking Front*	Ersatzteilbez. Hinten *Spare Part Marking Rear*	Gutachten *Homologation*
VITO / MIXTO Kasten (W639) ***VITO / MIXTO Box (W639)***																
Pro-Kit (Performance Fahrwerksfedern | *Performance Springs*)																
110 CDI, 113 CDI, 113 CDI 4x4, 116 CDI, 116 CDI 4x4, 122 CDI, 126	09.10 -	1550	1700	E10-25-022-01-22	A, 181			30	30					F11-25-022-02-VA	F11-25-022-01-HA	T
110 CDI, 113 CDI, 113 CDI 4x4, 116 CDI, 116 CDI 4x4, 122 CDI, 126	09.10 -	1550	1700	E10-25-022-02-22	A, 59, 181			30	30					F11-25-022-02-VA	Luftfederverstellung *air suspension*	T
VITO Bus (W639)																
Pro-Kit (Performance Fahrwerksfedern | *Performance Springs*)																
109 CDI, 111 CDI, 115 CDI, 119, 120 CDI, 122, 123, 126	09.03 - 08.10	1550	1550	E10-25-014-01-22	A, 18, 20, 181			30	30					F11-25-014-01-VA	F11-25-014-01-HA	T
109 CDI, 111 CDI, 115 CDI, 119, 120 CDI, 122, 123, 126	09.03 - 08.10	1550	1550	E10-25-014-05-22	A, 20, 59, 181			30	30					F11-25-014-01-VA	Luftfederverstellung *air suspension*	T
110 CDI, 113 CDI, 113 CDI 4x4, 116 CDI, 116 CDI 4x4, 122 CDI, 126	09.10 -	1550	1700	E10-25-022-01-22	A, 181			30	30					F11-25-022-02-VA	F11-25-022-01-HA	T
110 CDI, 113 CDI, 113 CDI 4x4, 116 CDI, 116 CDI 4x4, 122 CDI, 126	09.10 -	1550	1700	E10-25-022-02-22	A, 59, 181			30	30					F11-25-022-02-VA	Luftfederverstellung *air suspension*	T
VITO Kasten (W447) ***VITO Box (WW447)***																
Pro-Kit (Performance Fahrwerksfedern | *Performance Springs*)																
109 CDI, 111 CDI, 114 CDI, 116 CDI, 119 BlueTEC	10.14 -	1550	1750	E10-25-037-01-22	A, 18, 181			25-30	25-30					F11-25-037-01-FA	F11-25-037-01-RA	T
VITO MIXTO (W447)																
Pro-Kit (Performance Fahrwerksfedern | *Performance Springs*)																
109 CDI, 111 CDI, 114 CDI, 116 CDI, 119 BlueTEC, 119 BlueTEC 4x4	10.14 -	1550	1750	E10-25-037-01-22	A, 18, 181			25-30	25-30					F11-25-037-01-FA	F11-25-037-01-RA	T
VITO TOURER (W447)																
Pro-Kit (Performance Fahrwerksfedern | *Performance Springs*)																
109 CDI, 111 CDI, 114 CDI, 116 CDI, 119 BlueTEC, 119 BlueTEC 4x4	10.14 -	1550	1750	E10-25-037-01-22	A, 18, 181			25-30	25-30					F11-25-037-01-FA	F11-25-037-01-RA	T
V-KLASSE (W447) ***V-CLASS (W447)***																
Pro-Kit (Performance Fahrwerksfedern | *Performance Springs*)																
V 200 CDI, V 220 CDI, V 250 Blue TEC, V 200 CDI 4-matic, V 220 CDI 4-matic, V 250 Blue TEC 4-matic	03.14 -	1550	1750	E10-25-037-01-22	A, 18, 181			25-30	25-30					F11-25-037-01-FA	F11-25-037-01-RA	T
MINI (F55)																
Pro-Kit (Performance Fahrwerksfedern | *Performance Springs*)																
One, Cooper, One D, Cooper D	07.14 -	945	850	E10-57-004-03-22	A, 18, 20			25	25					F11-57-004-02-VA	F11-57-004-03-RA	T
Cooper S, Cooper SD	07.14 -	970	850	E10-57-004-04-22	A, 18, 20			25	25					F11-57-004-04-FA	F11-57-004-03-RA	T
B12 Pro-Kit (Performance Komplettfahrwerke | *Performance Springs+Shocks*)																
One, One First, Cooper, One D, Cooper D	07.14 -	945	850	E90-57-004-03-22	A, 18, 20, 78, 161			25	25					F11-57-004-02-VA	F11-57-004-03-RA	T
Cooper S, Cooper SD	07.14 -	970	850	E90-57-004-04-22	A, 18, 20, 78, 161			25	25					F11-57-004-04-FA	F11-57-004-03-RA	T
Pro-Street-S (Gewindefahrwerke - höhenverstellbar | *Coil-Overs-Adjustable Ride Hight*)																
One, One First, Cooper, One D, Cooper D	07.14 -	970	850	PSS65-57-004-05-22	A, 24, 25, 45, 160			20-45	20-45							T
Cooper S, Cooper SD	07.14 -	970	850	PSS65-57-004-06-22	A, 24, 25, 45, 101, 160			20-45	20-45							T
MINI (F56)																
Pro-Kit (Performance Fahrwerksfedern | *Performance Springs*)																
Cooper S, Cooper D, Cooper SD	12.13 -	945	775	E10-57-004-02-22	A, 18, 20			25-30	25-30					F11-57-004-02-VA	F11-57-004-01-HA	T
One, One First, Cooper, One D	12.13 -	900	775	E10-57-004-01-22	A, 18, 20			30	30					F11-57-004-01-VA	F11-57-004-01-HA	T
B12 Pro-Kit (Performance Komplettfahrwerke | *Performance Springs+Shocks*)																
One, One First, Cooper, One D	12.13 -	900	775	E90-57-004-01-22	A, 18, 20, 78, 161			30	30					F11-57-004-01-VA	F11-57-004-01-HA	T
Cooper S, Cooper D, Cooper SD	12.13 -	945	775	E90-57-004-02-22	A, 18, 20, 78, 161			25-30	25-30					F11-57-004-02-VA	F11-57-004-01-HA	T
Pro-Street-S (Gewindefahrwerke - höhenverstellbar | *Coil-Overs-Adjustable Ride Hight*)																
One, One First, Cooper, Cooper S, Cooper D, Cooper SD, John Cooper Works	12.13 -	970	850	PSS65-57-004-03-22	A, 24, 25, 45, 160			20-45	20-45							T
One, One First, Cooper, Cooper S, Cooper D, Cooper SD, John Cooper Works	12.13 -	970	850	PSS65-57-004-04-22	A, 24, 25, 45, 101, 160			20-45	20-45							T
MINI (R50, R53)																
Pro-Kit (Performance Fahrwerksfedern | *Performance Springs*)																
Cooper, Cooper S, One, One D	03.02 - 09.06	890	800	E10-57-001-03-22	A, 18, 20			30	30					F11-57-001-03-VA	F11-57-001-01-HA	T
Anti-Roll-Kit (Performance Stabilisatoren | *Performance Sway Bars*)																
Cooper, Cooper S, One, One D	06.01 - 09.06			E40-57-001-01-11	A, 18, 20, 22, 45					26 Rohr *26 tube*	19	nicht verstellbar *not adjustable*	2-fach verstellbar *2-way adjustable*	AS41-57-001-01-VA	AS41-57-001-01-HA	T
B12 Pro-Kit (Performance Komplettfahrwerke | *Performance Springs+Shocks*)																
One, Cooper, One D	03.02 - 09.06	890	800	E90-57-001-03-22	A, 18, 20, 78, 161			30	30					F11-57-001-03-VA	F11-57-001-01-HA	T
Cooper S, Cooper D, Cooper SD	03.02 - 09.06	890	800	E90-57-001-03-22	A, 18, 20, 78, 120, 161			30	30					F11-57-001-03-VA	F11-57-001-01-HA	T
Pro-Street-S (Gewindefahrwerke - höhenverstellbar | *Coil-Overs-Adjustable Ride Hight*)																
Cooper, Cooper S, One, One D	03.02 - 09.06	890	800	PSS65-57-001-01-22	A, 23, 39, 45, 160			20-50	20-50							T
MINI (R56)																
Pro-Kit (Performance Fahrwerksfedern | *Performance Springs*)																
Cooper, Cooper D, Cooper S, John Cooper Works, John Cooper Works GP, One, One D	10.06 -	905	755	E10-57-002-01-22	A, 18, 20			25-30	25-30					F11-57-002-01-VA	F11-57-002-01-HA	T
Cooper SD	02.11 -	935	755	E10-57-002-03-22	A, 18, 20			25-30	25-30					F11-57-002-03-VA	F11-57-002-01-HA	T
Anti-Roll-Kit (Performance Stabilisatoren | *Performance Sway Bars*)																
Cooper, Cooper D, Cooper S, Cooper SD, John Cooper Works, John Cooper Works GP, One, One D	10.06 -			E40-57-002-01-11	A, 18, 20, 22, 45					26	20	nicht verstellbar *not adjustable*	2-fach verstellbar *2-way adjustable*	AS41-57-002-01-VA	AS41-57-002-01-HA	T
B12 Pro-Kit (Performance Komplettfahrwerke | *Performance Springs+Shocks*)																
Cooper, Cooper S, One	03.10 -	905	755	E90-57-002-01-22	A, 18, 20, 78, 161, 164			25-30	25-30					F11-57-002-01-VA	F11-57-002-01-HA	T
Cooper, Cooper D, Cooper S, One, One D	10.06 -	905	755	E90-57-002-01-22	A, 18, 20, 78, 161			25-30	25-30					F11-57-002-01-VA	F11-57-002-01-HA	T

MERCEDES-BENZ

MINI

MINI

Modell *Model*	Baujahr *Year*	Achslast Vorne kg *Front Axle Load kg*	Achslast Hinten kg *Rear Axle Load kg*	Artikel-Nr. *Part-No.*	Hinweise *Notes*	ab Nachtrag ...xx BE *from suppl. ...xx of type approval*	bis Nachtrag ...xx BE *to suppl. ...xx of type approval*	ca. Tieferl. Vorne mm *ca. Lowering Front mm*	ca. Tieferl. Hinten mm *ca. Lowering Rear mm*	Ø Vorne mm *Ø Front mm*	Ø Hinten mm *Ø Rear mm*	Verstellbarkeit Vorne *Adjustable Front*	Verstellbarkeit Hinten *Adjustable Rear*	Ersatzteilbez. Vorne *Spare Part Marking Front*	Ersatzteilbez. Hinten *Spare Part Marking Rear*	Gutachten *Homologation*
MINI (R56)																
Pro-Street-S (Gewindefahrwerke - höhenverstellbar | *Coil-Overs-Adjustable Ride Hight*)																
Cooper, One	10.06 -	890	855	PSS65-57-002-01-22	A, 23, 45, 160			30-55	30-55							T
Cooper S, John Cooper Works, John Cooper Works GP,One D, Cooper D, Cooper SD	10.06 -	910	855	PSS65-57-002-02-22	A, 23, 45, 160			30-55	30-55							T
MINI Cabriolet (R52) ***MINI Convertible (R52)***																
Pro-Kit (Performance Fahrwerksfedern | *Performance Springs*)																
Cooper, Cooper S, One	07.04 - 11.07	890	800	E10-57-001-03-22	A, 18, 20			30	30					F11-57-001-03-VA	F11-57-001-01-HA	T
Anti-Roll-Kit (Performance Stabilisatoren | *Performance Sway Bars*)																
Cooper, Cooper S, One	07.04 - 11.07			E40-57-001-01-11	A, 18, 20, 22, 45					26 Rohr *26 tube*	19	nicht verstellbar *not adjustable*	2-fach verstellbar *2-way adjustable*	AS41-57-001-01-VA	AS41-57-001-01-HA	T
B12 Pro-Kit (Performance Komplettfahrwerke | *Performance Springs+Shocks*)																
Cooper, Cooper S, One	07.04 - 11.07	890	800	E90-57-001-03-22	A, 18, 20, 78, 120, 161			30	30					F11-57-001-03-VA	F11-57-001-01-HA	T
Pro-Street-S (Gewindefahrwerke - höhenverstellbar | *Coil-Overs-Adjustable Ride Hight*)																
Cooper, Cooper S, One	07.04 - 11.07	890	800	PSS65-57-001-01-22	A, 23, 39, 45, 160			20-50	20-50							T
MINI Cabriolet (R57) ***MINI Convertible (R57)***																
Pro-Kit (Performance Fahrwerksfedern | *Performance Springs*)																
Cooper, Cooper D, Cooper S, John Cooper Works, One	03.08 -	905	855	E10-57-002-02-22	A, 18, 20			30	20					F11-57-002-01-VA	F11-57-002-02-HA	T
Cooper SD	02.11 -	935	855	E10-57-002-04-22	A, 18, 20			30	20					F11-57-002-03-VA	F11-57-002-02-HA	T
Anti-Roll-Kit (Performance Stabilisatoren | *Performance Sway Bars*)																
Cooper, Cooper D, Cooper S, Cooper SD, John Cooper Works, One	03.08 -			E40-57-002-01-11	A, 18, 20, 22, 45					26	20	nicht verstellbar *not adjustable*	2-fach verstellbar *2-way adjustable*	AS41-57-002-01-VA	AS41-57-002-01-HA	T
B12 Pro-Kit (Performance Komplettfahrwerke | *Performance Springs+Shocks*)																
Cooper, Cooper D, Cooper S, One	11.07 -	905	855	E90-57-002-02-22	A, 18, 20, 78, 161			30	20					F11-57-002-01-VA	F11-57-002-02-HA	T
One, Cooper, Cooper S, Cooper D, Cooper SD	11.07 -	905	855	E90-57-002-02-22	A, 18, 20, 78, 161, 164			30	20					F11-57-002-01-VA	F11-57-002-02-HA	T
Pro-Street-S (Gewindefahrwerke - höhenverstellbar | *Coil-Overs-Adjustable Ride Hight*)																
One, Cooper	11.07 -	935	855	PSS65-57-003-01-22	A, 23, 45, 160			30-55	30-55							T
One D, Cooper S, Cooper D, Cooper SD, John Cooper Works	11.07 -	935	855	PSS65-57-003-02-22	A, 23, 45, 160			30-55	30-55							T
MINI CLUBMAN (R55)																
Pro-Kit (Performance Fahrwerksfedern | *Performance Springs*)																
Cooper, Cooper D, Cooper S, John Cooper Works, One, One D	10.07 -	905	855	E10-57-002-02-22	A, 18, 20			30	20					F11-57-002-01-VA	F11-57-002-02-HA	T
Cooper SD	02.11 -	935	855	E10-57-002-04-22	A, 18, 20			30	20					F11-57-002-03-VA	F11-57-002-02-HA	T
Anti-Roll-Kit (Performance Stabilisatoren | *Performance Sway Bars*)																
Cooper, Cooper D, Cooper S, Cooper SD, John Cooper Works, One, One D	10.07 -			E40-57-002-01-11	A, 18, 20, 22, 45					26	20	nicht verstellbar *not adjustable*	2-fach verstellbar *2-way adjustable*	AS41-57-002-01-VA	AS41-57-002-01-HA	T
B12 Pro-Kit (Performance Komplettfahrwerke | *Performance Springs+Shocks*)																
Cooper, Cooper D, Cooper S, Cooper SD, One, One D	10.07 - 06.11	905	855	E90-57-002-02-22	A, 18, 20, 78, 161			30	20					F11-57-002-01-VA	F11-57-002-02-HA	T
Cooper, Cooper D, Cooper S, Cooper SD, One, One D	07.11 -	905	855	E90-57-002-02-22	A, 18, 20, 78, 161, 164			30	20					F11-57-002-01-VA	F11-57-002-02-HA	T
Pro-Street-S (Gewindefahrwerke - höhenverstellbar | *Coil-Overs-Adjustable Ride Hight*)																
One, Cooper	10.07 -	935	855	PSS65-57-003-01-22	A, 23, 45, 160			30-55	30-55							T
One D, Cooper S, Cooper D, Cooper SD, John Cooper Works	10.07 -	935	855	PSS65-57-003-02-22	A, 23, 45, 160			30-55	30-55							T
MINI COUNTRYMAN (R60)																
Pro-Kit (Performance Fahrwerksfedern | *Performance Springs*)																
Cooper, Cooper D, Cooper S, Cooper SD, One, One D	06.10 -	1015	880	E10-57-003-01-22	A, 18, 20			30	20					F11-57-003-01-VA	F11-57-003-01-HA	T
Cooper ALL4, Cooper S ALL4, Cooper D ALL4, Cooper SD ALL4, Cooper S JCW	06.10 -	1040	940	E10-57-003-02-22	A, 18			30	20					F11-57-003-02-VA	F11-57-003-02-HA	T
B12 Pro-Kit (Performance Komplettfahrwerke | *Performance Springs+Shocks*)																
One, Cooper, Cooper S, One D, Cooper D, Cooper SD, Cooper S JCW	06.10 -	1015	880	E90-57-003-01-22	A, 18, 20, 78, 161			30	20					F11-57-003-01-VA	F11-57-003-01-HA	T
Cooper ALL4, Cooper S ALL4, Cooper D ALL4, Cooper SD ALL4, Cooper S JCW	06.10 -	1040	940	E90-57-003-02-22	A, 18, 78, 161			30	20					F11-57-003-02-VA	F11-57-003-02-HA	T
MINI Coupe (R58)																
Pro-Kit (Performance Fahrwerksfedern | *Performance Springs*)																
Cooper, Cooper S, Cooper SD, John Cooper Works	09.11 -	905	755	E10-57-002-01-22	A, 18, 20			25-30	25-30					F11-57-002-01-VA	F11-57-002-01-HA	T
Anti-Roll-Kit (Performance Stabilisatoren | *Performance Sway Bars*)																
Cooper, Cooper S, Cooper SD, John Cooper Works	09.11 -			E40-57-002-01-11	A, 18, 20, 22, 45					26	20	nicht verstellbar *not adjustable*	2-fach verstellbar *2-way adjustable*	AS41-57-002-01-VA	AS41-57-002-01-HA	T
B12 Pro-Kit (Performance Komplettfahrwerke | *Performance Springs+Shocks*)																
Cooper, Cooper S, Cooper SD, John Cooper Works	09.11 -	905	755	E90-57-002-01-22	A, 18, 20, 78, 161, 164			25-30	25-30					F11-57-002-01-VA	F11-57-002-01-HA	T
Pro-Street-S (Gewindefahrwerke - höhenverstellbar | *Coil-Overs-Adjustable Ride Hight*)																
Cooper, Cooper S, John Cooper Works, Cooper SD	09.11 -	860	630	PSS65-57-004-01-22	A, 24, 25, 45, 160			30-55	30-60							T
Cooper, Cooper S, John Cooper Works, Cooper SD	09.11 -	905	630	PSS65-57-004-02-22	A, 24, 25, 45, 160			30-55	30-60							T
MINI PACEMAN (R61)																
Pro-Kit (Performance Fahrwerksfedern | *Performance Springs*)																
Cooper, Cooper D, Cooper S, Cooper SD	04.12 -	1015	880	E10-57-003-01-22	A, 18, 20			30	20					F11-57-003-01-VA	F11-57-003-01-HA	T
Cooper ALL4, Cooper S ALL4, Cooper D ALL4, Cooper SD ALL4, John Cooper Works	04.12 -	1040	940	E10-57-003-02-22	A, 18			30	20					F11-57-003-02-VA	F11-57-003-02-HA	T
B12 Pro-Kit (Performance Komplettfahrwerke | *Performance Springs+Shocks*)																
Cooper, Cooper D, Cooper S, Cooper SD	04.12 -	1015	880	E90-57-003-01-22	A, 18, 20, 78, 161			30	20					F11-57-003-01-VA	F11-57-003-01-HA	T
Cooper ALL4, Cooper S ALL4, Cooper D ALL4, Cooper SD ALL4, John Cooper Works	04.12 -	1040	940	E90-57-003-02-22	A, 18, 78, 161			30	20					F11-57-003-02-VA	F11-57-003-02-HA	T

MINI

MITSUBISHI

Modell	Baujahr	Achslast Vorne kg	Achslast Hinten kg	Artikel-Nr.	Hinweise	ab Nachtrag ...xx BE	bis Nachtrag ...xx BE	ca. Tieferl. Vorne mm	ca. Tieferl. Hinten mm	Ø Vorne mm	Ø Hinten mm	Verstellbarkeit Vorne	Verstellbarkeit Hinten	Ersatzteilbez. Vorne	Ersatzteilbez. Hinten	Gutachten
Model	*Year*	*Front Axle Load kg*	*Rear Axle Load kg*	*Part-No.*	*Notes*	*from suppl. ...xx of type approval*	*to suppl. ...xx of type approval*	*ca. Lowering Front mm*	*ca. Lowering Rear mm*	*Ø Front mm*	*Ø Rear mm*	*Adjustable Front*	*Adjustable Rear*	*Spare Part Marking Front*	*Spare Part Marking Rear*	*Homologation*
MINI Roadster (R59)																
Pro-Kit (Performance Fahrwerksfedern | *Performance Springs*)																
Cooper, Cooper S, Cooper SD, John Cooper Works	02.12 -	905	755	E10-57-002-01-22	A, 18, 20			25-30	25-30					F11-57-002-01-VA	F11-57-002-01-HA	T
Anti-Roll-Kit (Performance Stabilisatoren | *Performance Sway Bars*)																
Cooper, Cooper S, Cooper SD, John Cooper Works	02.12 -			E40-57-002-01-11	A, 18, 20, 22, 45					26	20	nicht verstellbar *not adjustable*	2-fach verstellbar *2-way adjustable*	AS41-57-002-01-VA	AS41-57-002-01-HA	T
B12 Pro-Kit (Performance Komplettfahrwerke | *Performance Springs+Shocks*)																
Cooper, Cooper S, Cooper SD, John Cooper Works	02.12 -	905	755	E90-57-002-01-22	A, 18, 20, 78, 161, 164			25-30	25-30					F11-57-002-01-VA	F11-57-002-01-HA	T
Pro-Street-S (Gewindefahrwerke - höhenverstellbar | *Coil-Overs-Adjustable Ride Hight*)																
Cooper, Cooper S, John Cooper Works, Cooper SD	02.12 -	860	630	PSS65-57-004-01-22	A, 24, 25, 45, 160			25-50	30-60							T
Cooper, Cooper S, John Cooper Works, Cooper SD	02.12 -	905	630	PSS65-57-004-02-22	A, 24, 25, 45, 160			25-50	30-60							T
ASX (GA_W_)																
Pro-Kit (Performance Fahrwerksfedern | *Performance Springs*)																
1.6	05.10 -	1020	1000	E10-60-016-01-22	A, 18, 20			30	25					F11-60-016-01-VA	F11-60-013-01-HA	T
1.6 DI-D, 1.6 DI-D 4WD, 1.8 DI-D, 1.8 DI-D 4WD, 2.0, 2.0 4WD, 2.2 DI-D 4WD, 2.4, 2.4 4WD	02.10 -	1130	1000	E10-60-016-02-22	A, 18			30	25					F11-60-013-02-VA	F11-60-013-01-HA	T
ASX Van (GA_W_)																
Pro-Kit (Performance Fahrwerksfedern | *Performance Springs*)																
1.8 DI-D 4WD	06.10 -	1130	1000	E10-60-016-02-22	A, 18			30	25					F11-60-013-02-VA	F11-60-013-01-HA	T
CARISMA (DA_)																
Pro-Kit (Performance Fahrwerksfedern | *Performance Springs*)																
1.6, 1.9 TD	07.95 - 06.06	900	875	E6022-140	A, 18, 20			35	35					F6022001	F6021002	T
CARISMA Stufenheck (DA_)																
CARISMA Saloon (DA_)																
Pro-Kit (Performance Fahrwerksfedern | *Performance Springs*)																
1.6, 1.9 TD	09.96 - 06.06	900	875	E6022-140	A, 18, 20			35	35					F6022001	F6021002	T
COLT V (CJ_, CP_)																
Pro-Kit (Performance Fahrwerksfedern | *Performance Springs*)																
1.3, 1.5, 1300, 1300 GL,GLX, 1500, 1600, 1600 GLX	09.95 - 09.03	820	720	E6025-140	A, 18, 20			30	30					F6022001	F6025002	T
COLT VI (Z3_A, Z2_A)																
Pro-Kit (Performance Fahrwerksfedern | *Performance Springs*)																
1.1, 1.3, 1.5	10.02 - 06.12	750	745	E10-60-011-01-22	A, 18, 20			30	25-30					F11-60-011-01-VA	F11-60-011-01-HA	T
1.5 CZT, 1.5 DI-D, 1.5 Turbo	10.02 - 06.12	880	745	E10-60-011-02-22	A, 18, 20, 60			30	25-30					F11-60-011-02-VA	F11-60-011-01-HA	T
GALANT VI (EA_)																
Pro-Kit (Performance Fahrwerksfedern | *Performance Springs*)																
2.4, 2.4 GDI, 2.5 V6	09.96 - 10.04	1025	875	E6028-140	A, 18, 20, 42, 68			30	30					F6026101	F6026102	T
LANCER SPORTBACK (CX_A)																
Pro-Kit (Performance Fahrwerksfedern | *Performance Springs*)																
1.5, 1.6	06.08 -	905	980	E10-60-013-06-22	A, 18, 20			30	25					F11-60-016-01-VA	F11-60-013-03-HA	T
1.8, 1.8 Flex	06.08 -	990	980	E10-60-013-03-22	A, 18, 20			30	25					F11-60-013-01-VA	F11-60-013-03-HA	T
1.8 DI-D, 2.0 DI-D	06.08 -	1080	980	E10-60-013-04-22	A, 18, 20			30	25					F11-60-013-02-VA	F11-60-013-03-HA	T
LANCER Stufenheck (CS_A)																
LANCER Saloon (CS_A)																
Pro-Kit (Performance Fahrwerksfedern | *Performance Springs*)																
2.0 16V EVO VIII	03.04 -	1015	900	E10-60-005-01-22	A, 18			25	25					F11-60-005-01-VA	F11-60-005-01-HA	T
LANCER Stufenheck (CY/Z_A)																
LANCER Saloon (CY/Z_A)																
Pro-Kit (Performance Fahrwerksfedern | *Performance Springs*)																
1.5, 1.6	06.08 -	905	980	E10-60-013-07-22	A, 18, 20			30	25					F11-60-016-01-VA	F11-30-013-01-HA	T
1.8, 1.8 Flex	02.08 -	990	980	E10-60-013-01-22	A, 18, 20			30	25					F11-60-013-01-VA	F11-60-013-01-HA	T
1.8 DI-D, 2.0 DI-D	01.08 -	1080	980	E10-60-013-02-22	A, 18, 20			30	25					F11-60-013-02-VA	F11-60-013-01-HA	T
LANCER VI (CJ-CP_)																
Pro-Kit (Performance Fahrwerksfedern | *Performance Springs*)																
2.0 16V EVO	08.96 - 08.03	1015	900	E10-60-005-01-22	A, 18			25	25					F11-60-005-01-VA	F11-60-005-01-HA	T
MIRAGE Schrägheck (A05A)																
MIRAGE Hatchback (A05A)																
Pro-Kit (Performance Fahrwerksfedern | *Performance Springs*)																
1.0, 1.2	07.12 -	730	670	E10-60-017-01-22	A, 18, 20			25	25					F11-60-017-01-VA	F11-60-017-01-HA	
OUTLANDER II (CW_W)																
Pro-Kit (Performance Fahrwerksfedern | *Performance Springs*)																
2.0	11.06 - 12.12	1150		E10-60-014-01-20	A, 18, 20			30						F11-60-014-01-VA		T
SPACE STAR Schrägheck (A05A)																
SPACE STAR Hatchback (A05A)																
Pro-Kit (Performance Fahrwerksfedern | *Performance Springs*)																
1.0, 1.2	07.12 -	730	670	E10-60-017-01-22	A, 18, 20			25	25					F11-60-017-01-VA	F11-60-017-01-HA	T

NISSAN

Modell	Baujahr	Achslast Vorne kg	Achslast Hinten kg	Artikel-Nr.	Hinweise	ab Nachtrag ...xx BE	bis Nachtrag ...xx BE	ca. Tieferl. Vorne mm	ca. Tieferl. Hinten mm	Ø Vorne mm	Ø Hinten mm	Verstellbarkeit Vorne	Verstellbarkeit Hinten	Ersatzteilbez. Vorne	Ersatzteilbez. Hinten	Gutachten
Model	*Year*	*Front Axle Load kg*	*Rear Axle Load kg*	*Part-No.*	*Notes*	*from suppl. ...xx of type approval*	*to suppl. ...xx of type approval*	*ca. Lowering Front mm*	*ca. Lowering Rear mm*	*Ø Front mm*	*Ø Rear mm*	*Adjustable Front*	*Adjustable Rear*	*Spare Part Marking Front*	*Spare Part Marking Rear*	*Homologation*
350 Z (Z33)																
Pro-Kit (Performance Fahrwerksfedern | *Performance Springs*)																
3.5	10.03 -	975	975	E10-63-013-01-22	A, 18, 20			30	30					F11-63-013-01-VA	F11-63-013-01-HA	T
B12 Pro-Kit (Performance Komplettfahrwerke | *Performance Springs+Shocks*)																
3.5	10.03 -	975	975	E90-63-013-01-22	A, 18, 20, 78, 161			30	30					F11-63-013-01-VA	F11-63-013-01-HA	T
Pro-Street-S (Gewindefahrwerke - höhenverstellbar | *Coil-Overs-Adjustable Ride Hight*)																
3.5	10.03 -	935	975	PSS65-63-013-01-22	A, 24, 25, 45, 160			20-40	20-40							T
350 Z Roadster (Z33)																
Pro-Kit (Performance Fahrwerksfedern | *Performance Springs*)																
3.5	03.05 -	975	975	E10-63-013-01-22	A, 18, 20			30	30					F11-63-013-01-VA	F11-63-013-01-HA	T
B12 Pro-Kit (Performance Komplettfahrwerke | *Performance Springs+Shocks*)																
3.5	03.05 -	975	975	E90-63-013-01-22	A, 18, 20, 78, 161			30	30					F11-63-013-01-VA	F11-63-013-01-HA	T
Pro-Street-S (Gewindefahrwerke - höhenverstellbar | *Coil-Overs-Adjustable Ride Hight*)																
3.5	03.05 -	935	975	PSS65-63-013-01-22	A, 24, 25, 45, 160			20-40	20-40							T
370 Z (Z34)																
Pro-Kit (Performance Fahrwerksfedern | *Performance Springs*)																
3.7	06.09 -	940	940	E10-63-020-01-22	A, 18, 20			25	20					F11-63-020-01-VA	F11-63-020-01-HA	T
370 Z Roadster (Z34)																
Pro-Kit (Performance Fahrwerksfedern | *Performance Springs*)																
3.7	01.10 -	980	1000	E10-63-020-02-22	A, 18, 20			25	20					F11-63-020-02-VA	F11-63-020-02-HA	T
ALMERA II (N16)																
Pro-Kit (Performance Fahrwerksfedern | *Performance Springs*)																
1.5, 1.5 dCi, 1.8	07.00 -	955	970	E10-63-001-01-22	A, 18, 20			30	30					F11-63-001-01-VA	F11-63-001-01-HA	T
ALMERA II Hatchback (N16)																
Pro-Kit (Performance Fahrwerksfedern | *Performance Springs*)																
1.5, 1.5 XL, 1.5 dCi, 1.8	01.00 -	955	970	E10-63-001-01-22	A, 18, 20			30	30					F11-63-001-01-VA	F11-63-001-01-HA	T
CUBE (Z12)																
Pro-Kit (Performance Fahrwerksfedern | *Performance Springs*)																
1.5 16V, 1.6 16V, 1.5 dCi	03.10 -	985	880	E10-63-017-01-22	A, 18, 20			30	30					F11-63-017-01-VA	F11-63-017-01-HA	T
JUKE																
Pro-Kit (Performance Fahrwerksfedern | *Performance Springs*)																
1.2 DIG-T, 1.6, 1.5 dCi, 1.6 DIG-T	06.10 -	985	835	E10-63-022-01-22	A, 18, 20			20-25	25					F11-63-016-01-VA	F11-75-008-01-HA	T
1.6 DIG-T NISMO	06.10 -	985	835	E10-63-022-01-22	A, 18, 20			10-15	15					F11-63-016-01-VA	F11-75-008-01-HA	T
1.6 DIG-T 4x4	06.10 -	1010	900	E10-63-022-02-22	A, 18			35	25					F11-63-016-02-VA	F11-63-022-01-HA	T
1.6 DIG-T NISMO 4x4	06.10 -	1010	900	E10-63-022-02-22	A, 18			25	15					F11-63-016-02-VA	F11-63-022-01-HA	T
B12 Pro-Kit (Performance Komplettfahrwerke | *Performance Springs+Shocks*)																
1.2 DIG-T, 1.6, 1.5 dCi, 1.6 DIG-T	06.10 -	985	835	E90-63-022-01-22	A, 18, 20, 78, 161			20-25	25					F11-63-016-01-VA	F11-75-008-01-HA	T
1.6 DIG-T NISMO	06.10 -	985	835	E90-63-022-01-22	A, 18, 20, 78, 161			10-15	15					F11-63-016-01-VA	F11-75-008-01-HA	T
1.6 DIG-T 4x4	06.10 -	1010	900	E90-63-022-02-22	A, 18, 78, 161			35	25					F11-63-016-02-VA	F11-63-022-01-HA	T
1.6 DIG-T NISMO 4x4	06.10 -	1010	900	E90-63-022-02-22	A, 18, 78, 161			25	15					F11-63-016-02-VA	F11-63-022-01-HA	T
MICRA C+C (K12)																
Pro-Kit (Performance Fahrwerksfedern | *Performance Springs*)																
1.4 16V, 1.6 160 SR	08.05 -	875	800	E10-63-010-03-22	A, 18, 20			30	20					F11-63-010-01-VA	F11-75-008-01-HA	T
MICRA III (K12)																
Pro-Kit (Performance Fahrwerksfedern | *Performance Springs*)																
1.0 16V, 1.2 16V, 1.4 16V, 1.5 dCi	01.03 - 06.10	875	800	E10-63-010-01-22	A, 18, 20			30	30					F11-63-010-01-VA	F11-63-010-01-HA	T
160 SR	05.05 - 06.10	875	800	E10-63-010-01-22	A, 18, 20			25-30	25-30					F11-63-010-01-VA	F11-63-010-01-HA	T
Sportline (Performance Fahrwerksfedern Sport | *Sport Performance Springs*)																
1.0 16V, 1.2 16V, 1.4 16V, 1.5 dCi	01.03 - 06.10	860	880	E20-63-010-01-22	A, 18, 20			45-50	40					F21-63-010-01-VA	F21-63-010-01-HA	T
160 SR	05.05 - 06.10	860	880	E20-63-010-01-22	A, 18, 20			40-50	35-40					F21-63-010-01-VA	F21-63-010-01-HA	T
B12 Pro-Kit (Performance Komplettfahrwerke | *Performance Springs+Shocks*)																
1.0 16V, 1.2 16V, 1.4 16V, 1.5 dCi	01.03 - 06.10	875	800	E90-63-010-01-22	A, 18, 20, 78, 161			30	30					F11-63-010-01-VA	F11-63-010-01-HA	T
MICRA IV (K13)																
Pro-Kit (Performance Fahrwerksfedern | *Performance Springs*)																
1.2	05.10 -	750	750	E10-63-023-01-22	A, 18, 20			30-35	10					F11-63-023-01-VA	F11-63-023-01-HA	T
1.2 DIG, 1.5	11.10 -	825	750	E10-63-023-02-22	A, 18, 20			30-35	10					F11-63-023-02-VA	F11-63-023-01-HA	T
Note (E11)																
Pro-Kit (Performance Fahrwerksfedern | *Performance Springs*)																
1.4, 1.6	03.06 -	850	800	E10-63-015-01-22	A, 18, 20			30	30					F11-75-008-01-VA	F11-75-008-01-HA	T
1.5 dCi	03.06 -	905	800	E10-63-015-02-22	A, 18, 20			30	30					F11-75-008-02-VA	F11-75-008-01-HA	T
Note (E12)																
Pro-Kit (Performance Fahrwerksfedern | *Performance Springs*)																
1.2	05.10 -	780	770	E10-63-023-01-22	A, 18, 20			30-35	10					F11-63-023-01-VA	F11-63-023-01-HA	T
PIXO (UA0)																
Pro-Kit (Performance Fahrwerksfedern | *Performance Springs*)																
1.0	06.09 -	700	650	E10-63-019-01-22	A, 18, 20			25	15					F11-63-019-01-VA	F11-63-019-01-HA	T

NISSAN

Modell *Model*	Baujahr *Year*	Achslast Vorne kg *Front Axle Load kg*	Achslast Hinten kg *Rear Axle Load kg*	Artikel-Nr. *Part-No.*	Hinweise *Notes*	ab Nachtrag ...xx BE *from suppl. ...xx of type approval*	bis Nachtrag ...xx BE *to suppl. ...xx of type approval*	ca. Tieferl. Vorne mm *ca. Lowering Front mm*	ca. Tieferl. Hinten mm *ca. Lowering Rear mm*	Ø Vorne mm *Ø Front mm*	Ø Hinten mm *Ø Rear mm*	Verstellbarkeit Vorne *Adjustable Front*	Verstellbarkeit Hinten *Adjustable Rear*	Ersatzteilbez. Vorne *Spare Part Marking Front*	Ersatzteilbez. Hinten *Spare Part Marking Rear*	Gutachten *Homologation*
PRIMERA (P11)																
Pro-Kit (Performance Fahrwerksfedern | *Performance Springs*)																
1.6 16V, 1.8, 1.8 16V	06.96 - 07.99	990	875	E6336-140	A, 18, 20			30	30					F6336001	F6336002	T
1.6 16V, 1.8, 1.8 16V	08.99 - 12.01	990	875	E6343-140	A, 18, 20			30	30					F6336001	F6336002	T
PRIMERA Hatchback (P11)																
Pro-Kit (Performance Fahrwerksfedern | *Performance Springs*)																
1.6 16V, 1.8 16V	09.96 - 07.99	990	875	E6336-140	A, 18, 20			30	30					F6336001	F6336002	T
1.6 16V, 1.8 16V	08.99 - 07.02	990	875	E6343-140	A, 18, 20			30	30					F6336001	F6336002	T
PULSAR (N17)																
Pro-Kit (Performance Fahrwerksfedern | *Performance Springs*)																
1.2 DIG-T, 1.6 DIG-T, 1.5 dCi	08.12 -	1000	875	E10-63-029-01-22	A, 18, 20			30	30					F11-63-029-01-FA	F11-75-008-07-HA	T
QASHQAI / QASHQAI +2 (J10, JJ10)																
Pro-Kit (Performance Fahrwerksfedern | *Performance Springs*)																
1.6, 2.0	02.07 -	1175	1100	E10-63-016-01-22	A, 18, 20, 66			30	30					F11-63-016-01-VA	F11-63-016-01-HA	T
2.0 Allrad, 1.5 dCi, 2.0 dCi, 2.0 dCi Allrad *2.0 All-Wheel-Drive, 1.5 dCi, 2.0 dCi, 2.0 dCi All-Wheel-Drive*	02.07 -	1230	1100	E10-63-016-02-22	A, 18, 66			30	30					F11-63-016-02-VA	F11-63-016-01-HA	T
1.6 dCi, 1.6 dCi Allrad *1.6 dCi, 1.6 dCi All-Wheel-Drive*	02.07 -	1230	1100	E10-63-016-02-22	A, 18, 66			35-40	30					F11-63-016-02-VA	F11-63-016-01-HA	T
B12 Pro-Kit (Performance Komplettfahrwerke | *Performance Springs+Shocks*)																
1.6, 2.0	02.07 -	1175	1100	E90-63-010-01-22	A, 18, 20, 66, 78, 161			30	30					F11-63-016-01-VA	F11-63-016-01-HA	T
2.0 Allrad, 1.5 dCi, 2.0 dCi, 2.0 dCi Allrad *2.0 All-Wheel-Drive, 1.5 dCi, 2.0 dCi, 2.0 dCi All-Wheel-Drive*	02.07 -	1230	1100	E90-63-010-02-22	A, 18, 66, 78, 161			30	30					F11-63-016-02-VA	F11-63-016-01-HA	T
1.6 dCi, 1.6 dCi Allrad *1.6 dCi, 1.6 dCi All-Wheel-Drive*	02.07 -	1230	1100	E90-63-010-02-22	A, 18, 66, 78, 161			30	30					F11-63-016-02-VA	F11-63-016-01-HA	T
QASHQAI (J11)																
Pro-Kit (Performance Fahrwerksfedern | *Performance Springs*)																
1.2 DIG-T, 1.5 dCi	02.14 -	1025	970	E10-63-027-01-22	A, 18, 20, 171			30	30					F11-63-027-01-VA	F11-63-027-01-HA	T
1.6 DIG-T, 1.6 dCi	02.14 -	1150	970	E10-63-027-02-22	A, 18, 20, 171			30	30					F11-63-027-02-VA	F11-63-027-01-HA	T
1.6 dCi Allrad, 1.6 DIG-T, 1.6 dCi	02.14 -	1150	1015	E10-63-027-03-22	A, 18, 170			30	30					F11-63-027-02-VA	F11-63-027-03-HA	T
1.2 DIG-T, 1.5 dCi	02.14 -	1025	1015	E10-63-027-04-22	A, 18, 20, 170			30	30					F11-63-027-01-VA	F11-63-027-03-HA	T
Pro-Lift-Kit (Performance Höherlegung | *Performance Lift Springs*)																
1.2 DIG-T, 1.5 dCi	02.14 -	1025	970	E30-63-027-01-22	A, 18, 20, 171			+30	+20					F31-63-027-01-VA	F31-63-027-01-HA	T
1.6 DIG-T, 1.6 dCi	02.14 -	1150	970	E30-63-027-02-22	A, 18, 20, 171			+30	+20					F31-63-027-02-VA	F31-63-027-01-HA	T
1.6 dCi Allrad, 1.6 DIG-T, 1.6 dCi	02.14 -	1150	1015	E30-63-027-03-22	A, 18, 170			+30	+30					F31-63-027-02-VA	F31-63-027-03-HA	T
1.2 DIG-T, 1.5 dCi	02.14 -	1025	1015	E30-63-027-04-22	A, 18, 20, 170			+30	+20					F31-63-027-01-VA	F31-63-027-03-HA	T
TIIDA Schrägheck ***TIIDA Hatchback***																
Pro-Kit (Performance Fahrwerksfedern | *Performance Springs*)																
1.8	05.04 - 02.07	985	880	E10-63-017-01-22	A, 18, 20			25	20					F11-63-017-01-VA	F11-63-017-01-HA	T
TIIDA Schrägheck (C11X) ***TIIDA Hatchback (C11X)***																
Pro-Kit (Performance Fahrwerksfedern | *Performance Springs*)																
1.6, 1.8	09.07 -	985	880	E10-63-017-01-22	A, 18, 20			25	20					F11-63-017-01-VA	F11-63-017-01-HA	T
TIIDA Stufenheck (SC11X) ***TIIDA Saloon (SC11X)***																
Pro-Kit (Performance Fahrwerksfedern | *Performance Springs*)																
1.6, 1.8	09.07 -	985	880	E10-63-017-01-22	A, 18, 20			25	20					F11-63-017-01-VA	F11-63-017-01-HA	T
X-TRAIL (T32)																
Pro-Kit (Performance Fahrwerksfedern | *Performance Springs*)																
1.6 DIG-T, 1.6 cDi, 1.6 cDi 4x4	12.13 -	1150	1315	E10-63-028-01-22	A, 18			30	20-25					F11-63-027-02-VA	F11-63-028-01-RA	T
Pro-Lift-Kit (Performance Höherlegung | *Performance Lift Springs*)																
1.6 DIG-T, 1.6 cDi, 1.6 cDi 4x4	12.13 -	1150	1315	E30-63-028-01-22	A, 18			+25	+25-30					F31-63-027-02-VA	F31-63-028-01-RA	T

OPEL

ADAM																
Pro-Kit (Performance Fahrwerksfedern | *Performance Springs*)																
1.0, 1.2, 1.4	10.12 -	885	845	E10-65-015-01-22	A, 18, 20			15-20	15					F11-65-015-01-VA	F11-65-015-01-HA	T
1.4 S	11.14 -	885	845	E10-65-015-01-22	A, 18, 20			10-15	5-10					F11-65-015-01-VA	F11-65-015-01-HA	T
B12 Pro-Kit (Performance Komplettfahrwerke | *Performance Springs+Shocks*)																
1.0, 1.2, 1.4	10.12 -	885	845	E90-65-015-03-22	A, 18, 20, 78, 161			15-20	15					F11-65-015-01-VA	F11-65-015-01-HA	T
1.4 S	11.14 -	885	845	E90-65-015-03-22	A, 18, 20, 78, 161			10-15	5-10					F11-65-015-01-VA	F11-65-015-01-HA	T
Pro-Street-S (Gewindefahrwerke - höhenverstellbar | *Coil-Overs-Adjustable Ride Hight*)																
1.0, 1.2, 1.4, 1.4 S	10.12 -	820	730	PSS65-30-010-01-22	A, 25, 45, 160			20-45	25-45							T
ASTRA F (56_, 57_)																
Pro-Kit (Performance Fahrwerksfedern | *Performance Springs*)																
1.4, 1.4 Si, 1.4 i, 1.4 i 16V, 1.6, 1.6 Si, 1.6 i, 1.6 i 16V, 1.7 D, 1.7 TD, 1.7 TDS, 1.8 i, 2.0 i, 2.0 i 16V	09.91 - 09.98	870	800	E6521-140	A, 18, 20			30	30					F6521001	F6522102	T
Sportline (Performance Fahrwerksfedern Sport | *Sport Performance Springs*)																
1.4, 1.4 Si, 1.4 i, 1.4 i 16V, 1.6, 1.6 Si, 1.6 i, 1.6 i 16V, 1.7 D, 1.7 TD, 1.7 TDS, 1.8 i, 1.8 i 16V, 2.0 i, 2.0 i 16V	09.91 - 09.98	900	800	E20-65-001-02-22	A, 20			45-50	30					F21-65-001-02-VA	F21-65-001-02-HA	T

OPEL

NISSAN

Modell	Baujahr	Achslast Vorne kg	Achslast Hinten kg	Artikel-Nr.	Hinweise	ab Nachtrag ...xx BE	bis Nachtrag ...xx BE	ca. Tieferl. Vorne mm	ca. Tieferl. Hinten mm	Ø Vorne mm	Ø Hinten mm	Verstellbarkeit Vorne	Verstellbarkeit Hinten	Ersatzteilbez. Vorne	Ersatzteilbez. Hinten	Gutachten
Model	*Year*	*Front Axle Load kg*	*Rear Axle Load kg*	*Part-No.*	*Notes*	*from suppl. ...xx of type approval*	*to suppl. ...xx of type approval*	*ca. Lowering Front mm*	*ca. Lowering Rear mm*	*Ø Front mm*	*Ø Rear mm*	*Adjustable Front*	*Adjustable Rear*	*Spare Part Marking Front*	*Spare Part Marking Rear*	*Homologation*
ASTRA F (56_, 57_)																
B12 Pro-Kit (Performance Komplettfahrwerke | *Performance Springs+Shocks*)																
1.4, 1.4 Si, 1.4 i, 1.4 i 16V, 1.6, 1.6 Si, 1.6 i, 1.6 i 16V, 1.7 D, 1.7 TD, 1.7 TDS, 1.8 i, 1.8 i 16V, 2.0 i, 2.0 i 16V	09.91 - 09.98	870	800	E90-65-022-01-22	A, 18, 20, 78, 161			30	30					F6521001	F6522102	T
B12 Sportline (Performance Komplettfahrwerke Sport | *Sport Performance Springs+Shocks*)																
1.4, 1.4 Si, 1.4 i, 1.4 i 16V, 1.6, 1.6 Si, 1.6 i, 1.6 i 16V, 1.7 D, 1.7 TD, 1.7 TDS, 1.8 i, 1.8 i 16V, 2.0 i, 2.0 i 16V	09.91 - 09.98	900	800	E95-65-022-01-22	A, 20, 78, 161			45-50	30					F21-65-001-02-VA	F21-65-001-02-HA	T
ASTRA F Cabriolet (53_B)																
ASTRA F Convertible (53_B)																
Pro-Kit (Performance Fahrwerksfedern | *Performance Springs*)																
1.4 Si, 1.4 i 16V, 1.6 i, 1.8 i 16V, 2.0 i	03.93 - 03.01	870	800	E6521-140	A, 18, 20			30	30					F6521001	F6522102	T
B12 Pro-Kit (Performance Komplettfahrwerke | *Performance Springs+Shocks*)																
1.4 Si, 1.4 i 16V, 1.6 i, 1.8 i 16V, 2.0 i	03.93 - 03.01	870	800	E90-65-022-01-22	A, 18, 20, 78, 161			30	30					F6521001	F6522102	T
ASTRA F Caravan (51_, 52_)																
ASTRA F Estate (51_, 52_)																
Pro-Kit (Performance Fahrwerksfedern | *Performance Springs*)																
1.4, 1.4 Si, 1.4 i, 1.4 i 16V, 1.6, 1.6 Si, 1.6 i, 1.6 i 16V, 1.7 D, 1.7 TD, 1.7 TDS, 1.8 i, 1.8 i 16V, 2.0 i, 2.0 i 16V	09.91 - 01.98	870	860	E6523-140	A, 18, 20			30	30					F6518001	F6511002	T
B12 Pro-Kit (Performance Komplettfahrwerke | *Performance Springs+Shocks*)																
1.4, 1.4 Si, 1.4 i, 1.4 i 16V, 1.6, 1.6 Si, 1.6 i, 1.6 i 16V, 1.7 D, 1.7 TD, 1.7 TDS, 1.8 i, 1.8 i 16V, 2.0 i, 2.0 i 16V	09.91 - 01.98	870	860	E90-65-022-02-22	A, 18, 20, 78, 161			30	30					F6518001	F6511002	T
ASTRA F CC (53_, 54_, 58_, 59_)																
ASTRA F Hatchback (53_, 54_, 58_, 59_)																
Pro-Kit (Performance Fahrwerksfedern | *Performance Springs*)																
1.4, 1.4 Si, 1.4 i, 1.4 i 16V, 1.6, 1.6 Si, 1.6 i, 1.6 i 16V, 1.7 D, 1.7 TD, 1.7 TDS, 1.8 i, 2.0 GSI 16V, 2.0 i, 2.0 i 16V	09.91 - 01.98	870	800	E6521-140	A, 18, 20			30	30					F6521001	F6522102	T
Sportline (Performance Fahrwerksfedern Sport | *Sport Performance Springs*)																
1.4, 1.4 Si, 1.4 i, 1.4 i 16V, 1.6, 1.6 Si, 1.6 i, 1.6 i 16V, 1.7 D, 1.7 TD, 1.7 TDS, 1.8 i, 1.8 i 16V, 2.0 GSI 16V, 2.0 i, 2.0 i 16V	09.91 - 01.98	900	800	E20-65-001-02-22	A, 20			45-50	30					F21-65-001-02-VA	F21-65-001-02-HA	T
B12 Pro-Kit (Performance Komplettfahrwerke | *Performance Springs+Shocks*)																
1.4, 1.4 Si, 1.4 i, 1.4 i 16V, 1.6, 1.6 Si, 1.6 i, 1.6 i 16V, 1.7 D, 1.7 TD, 1.7 TDS, 1.8 i, 1.8 i 16V, 2.0 GSI 16V, 2.0 i, 2.0 i 16V	09.91 - 01.98	870	800	E90-65-022-01-22	A, 18, 20, 78, 161			30	30					F6521001	F6522102	T
B12 Sportline (Performance Komplettfahrwerke Sport | *Sport Performance Springs+Shocks*)																
1.4, 1.4 Si, 1.4 i, 1.4 i 16V, 1.6, 1.6 Si, 1.6 i, 1.6 i 16V, 1.7 D, 1.7 TD, 1.7 TDS, 1.8 i, 1.8 i 16V, 2.0 GSI 16V, 2.0 i, 2.0 i 16V	09.91 - 01.98	900	800	E95-65-022-01-22	A, 20, 78, 161			45-50	30					F21-65-001-02-VA	F21-65-001-02-HA	T
ASTRA F CLASSIC Caravan																
ASTRA F CLASSIC Estate																
Pro-Kit (Performance Fahrwerksfedern | *Performance Springs*)																
1.4 i, 1.6 i, 1.6 i 16V, 1.8	01.98 - 01.05	870	860	E6523-140	A, 18, 20			30	30					F6518001	F6511002	T
ASTRA G Cabriolet																
ASTRA G Convertible																
Pro-Kit (Performance Fahrwerksfedern | *Performance Springs*)																
1.6, 1.6 16V, 1.8 16V, 2.0 16V Turbo, 2.2 16V	03.01 - 10.05	1015	845	E10-65-001-02-22	A, 18, 20			30	30					F11-65-001-01-VA	F6541002	T
2.2 DTI	09.02 - 10.05	1040	845	E10-65-001-06-22	A, 18, 20			30	30					F6529001	F6541002	T
B12 Pro-Kit (Performance Komplettfahrwerke | *Performance Springs+Shocks*)																
1.6, 1.6 16V, 1.8 16V, 2.0 16V Turbo, 2.2 16V	03.01 - 10.05	1015	845	E90-65-001-06-22	A, 18, 20, 78, 161			30	30					F11-65-001-01-VA	F6541002	T
2.2 DTI	09.02 - 10.05	1040	845	E90-65-001-07-22	A, 18, 20, 78, 161			30	30					F6529001	F6541002	T
ASTRA G Caravan (F35_)																
ASTRA G Estate (F35_)																
Pro-Kit (Performance Fahrwerksfedern | *Performance Springs*)																
1.2 16V, 1.4, 1.4 16V, 1.6, 1.6 16V	02.98 - 12.09	845	885	E6548-140	A, 18, 20, 68			30	30					F6517001	F6542002	T
1.4, 1.4 16V, 1.6, 1.6 16V, 1.7 CDTI, 1.7 DTI 16V, 1.7 TD, 1.8 16V, 2.0 16V	02.98 - 12.09	935	885	E6542-140	A, 18, 20, 68			30	30					F6537001	F6542002	T
1.7 CDTI, 1.7 DTI 16V, 1.7 TD, 1.8 16V, 2.0 16V, 2.0 DI, 2.0 DTI 16V, 2.2 16V, 2.2 DTI	02.98 - 07.04	1035	885	E6544-140	A, 18, 20, 68			30	30					F6529001	F6542002	T
B12 Pro-Kit (Performance Komplettfahrwerke | *Performance Springs+Shocks*)																
1.2 16V, 1.4, 1.4 16V, 1.6, 1.6 16V	02.98 - 12.09	845	885	E90-65-001-08-22	A, 18, 20, 68, 78, 161			30	30					F6517001	F6542002	T
1.4, 1.4 16V, 1.6, 1.6 16V, 1.7 DTI 16V, 1.7 TD, 1.8 16V, 2.0 16V	02.98 - 12.09	935	885	E90-65-001-09-22	A, 18, 20, 68, 78, 161			30	30					F6537001	F6542002	T
1.7 DTI 16V, 1.7 TD, 1.8 16V, 2.0 16V, 2.0 DI, 2.0 DTI 16V, 2.2 16V, 2.2 DTI	08.99 - 07.04	1035	885	E90-65-001-10-22	A, 18, 20, 68, 78, 161			30	30					F6529001	F6542002	T
ASTRA G CC (F48_, F08_)																
ASTRA G Hatchback (F48_, F08_)																
Pro-Kit (Performance Fahrwerksfedern | *Performance Springs*)																
1.2 16V, 1.4, 1.4 16V, 1.6, 1.6 16V	02.98 - 12.09	845	820	E6547-140	A, 18, 20, 68			30	30					F6517001	F6541002	T
1.4, 1.4 16V, 1.6, 1.6 16V, 1.7 CDTI, 1.7 DTI 16V, 1.7 TD, 1.8 16V, 2.0 16V	02.98 - 12.09	935	820	E6541-140	A, 18, 20, 68			30	30					F6537001	F6541002	T
1.7 CDTI, 1.7 DTI 16V, 1.7 TD, 1.8 16V, 2.0 16V, 2.0 DI, 2.0 DTI 16V, 2.2 16V, 2.2 DTI	02.98 - 01.05	1035	820	E6543-140	A, 18, 20, 68			30	30					F6529001	F6541002	T
Sportline (Performance Fahrwerksfedern Sport | *Sport Performance Springs*)																
1.2 16V, 1.4, 1.4 16V, 1.6, 1.6 16V, 1.8 16V, 2.0 16V, 2.2 16V	02.98 - 12.09	965	895	E20-65-001-01-22	A, 20			45-50	30					F21-65-001-01-VA	F21-65-001-01-HA	T

OPEL

Modell	Baujahr	Achslast Vorne kg	Achslast Hinten kg	Artikel-Nr.	Hinweise	ab Nachtrag ...xx BE	bis Nachtrag ...xx BE	ca. Tieferl. Vorne mm	ca. Tieferl. Hinten mm	Ø Vorne mm	Ø Hinten mm	Verstellbarkeit Vorne	Verstellbarkeit Hinten	Ersatzteilbez. Vorne	Ersatzteilbez. Hinten	Gutachten
Model	*Year*	*Front Axle Load kg*	*Rear Axle Load kg*	*Part-No.*	*Notes*	*from suppl. ...xx of type approval*	*to suppl. ...xx of type approval*	*ca. Lowering Front mm*	*ca. Lowering Rear mm*	*Ø Front mm*	*Ø Rear mm*	*Adjustable Front*	*Adjustable Rear*	*Spare Part Marking Front*	*Spare Part Marking Rear*	*Homologation*
ASTRA G CC (F48_, F08_)																
ASTRA G Hatchback (F48_, F08_)																
B12 Pro-Kit (Performance Komplettfahrwerke | *Performance Springs+Shocks*)																
1.2 16V, 1.4, 1.4 16V, 1.6, 1.6 16V	02.98 - 12.09	845	820	E90-65-001-01-22	A, 18, 20, 68, 78, 161			30	30					F6517001	F6541002	T
1.4, 1.4 16V, 1.6, 1.6 16V, 1.7 CDTI, 1.7 DTI 16V, 1.7 TD, 1.8 16V, 2.0 16V	02.98 - 12.09	935	820	E90-65-001-02-22	A, 18, 20, 68, 78, 161			30	30					F6537001	F6541002	T
1.7 CDTI, 1.7 DTI 16V, 1.7 TD, 1.8 16V, 2.0 16V, 2.0 DI, 2.0 DTI 16V, 2.2 16V	02.98 - 01.05	1035	820	E90-65-001-03-22	A, 18, 20, 68, 78, 161			30	30					F6529001	F6541002	T
B12 Sportline (Performance Komplettfahrwerke Sport | *Sport Performance Springs+Shocks*)																
1.2 16V, 1.4, 1.4 16V, 1.6, 1.6 16V, 1.8 16V, 2.0 16V, 2.2 16V	02.98 - 12.09	965	895	E95-65-001-01-22	A, 20, 78, 161			45-50	30					F21-65-001-01-VA	F21-65-001-01-HA	T
ASTRA G Coupe (F07_)																
Pro-Kit (Performance Fahrwerksfedern | *Performance Springs*)																
1.6 16V, 1.8 16V, 2.0 16V Turbo, 2.2 16V	03.00 - 05.05	1015	780	E10-65-001-01-22	A, 18, 20, 68			30	30					F11-65-001-01-VA	F6541002	T
2.2 DTI	09.02 - 05.05	1040	780	E10-65-001-05-22	A, 18, 20, 68			30	30					F6529001	F6541002	T
B12 Pro-Kit (Performance Komplettfahrwerke | *Performance Springs+Shocks*)																
1.6 16V, 1.8 16V, 2.0 16V Turbo, 2.2 16V	03.00 - 05.05	1015	780	E90-65-001-04-22	A, 18, 20, 68, 78, 161			30	30					F11-65-001-01-VA	F6541002	T
2.2 DTI	09.02 - 05.05	1040	780	E90-65-001-05-22	A, 18, 20, 68, 78, 161			30	30					F6529001	F6541002	T
ASTRA G Stufenheck (F69_)																
ASTRA G Saloon (F69_)																
Pro-Kit (Performance Fahrwerksfedern | *Performance Springs*)																
1.2 16V, 1.4, 1.4 16V, 1.6, 1.6 16V	09.98 - 12.09	845	820	E6547-140	A, 18, 20, 68			30	30					F6517001	F6541002	T
1.4, 1.4 16V, 1.6, 1.6 16V, 1.7 CDTI, 1.7 DTI 16V, 1.7 TD, 1.8 16V, 2.0 16V	09.98 - 12.09	935	820	E6541-140	A, 18, 20, 68			30	30					F6537001	F6541002	T
1.7 CDTI, 1.7 DTI 16V, 1.7 TD, 1.8 16V, 2.0 16V, 2.0 DI, 2.0 DTI 16V, 2.2 16V, 2.2 DTI	09.98 - 01.05	1035	820	E6543-140	A, 18, 20, 68			30	30					F6529001	F6541002	T
Sportline (Performance Fahrwerksfedern Sport | *Sport Performance Springs*)																
1.2 16V, 1.4, 1.4 16V, 1.6, 1.6 16V, 1.8 16V, 2.0 16V, 2.2 16V	09.98 - 12.09	965	895	E20-65-001-01-22	A, 20			45-50	30					F21-65-001-01-VA	F21-65-001-01-HA	T
B12 Pro-Kit (Performance Komplettfahrwerke | *Performance Springs+Shocks*)																
1.2 16V, 1.4, 1.4 16V, 1.6, 1.6 16V	09.98 - 12.09	845	820	E90-65-001-01-22	A, 18, 20, 68, 78, 161			30	30					F6517001	F6541002	T
1.4, 1.4 16V, 1.6, 1.6 16V, 1.7 CDTI, 1.7 DTI 16V, 1.7 TD, 1.8 16V, 2.0 16V	09.98 - 12.09	935	820	E90-65-001-02-22	A, 18, 20, 68, 78, 161			30	30					F6537001	F6541002	T
1.7 CDTI, 1.7 DTI 16V, 1.7 TD, 1.8 16V, 2.0 16V, 2.0 DI, 2.0 DTI 16V, 2.2 16V	09.98 - 01.05	1035	820	E90-65-001-03-22	A, 18, 20, 68, 78, 161			30	30					F6529001	F6541002	T
B12 Sportline (Performance Komplettfahrwerke Sport | *Sport Performance Springs+Shocks*)																
1.2 16V, 1.4, 1.4 16V, 1.6, 1.6 16V, 1.8 16V, 2.0 16V, 2.2 16V	09.98 - 12.09	965	895	E95-65-001-01-22	A, 20, 78, 161			45-50	30					F21-65-001-01-VA	F21-65-001-01-HA	T
ASTRA H																
Pro-Kit (Performance Fahrwerksfedern | *Performance Springs*)																
1.4, 1.6, 1.8	03.04 -	970	860	E10-65-013-01-22	A, 18, 20, 68			30	30					F11-65-007-05-VA	F6541002	T
1.3 CDTI, 1.6 Turbo, 1.7 CDTI, 1.9 CDTI, 1.9 CDTI 16V, 2.0 Turbo	03.04 -	1075	860	E10-65-013-02-22	A, 18, 20, 68			30	30					F11-65-007-01-VA	F6541002	T
Sportline (Performance Fahrwerksfedern Sport | *Sport Performance Springs*)																
1.4, 1.6, 1.8	03.04 -	960	860	E20-65-013-01-22	A, 20, 68			45-50	30					F21-65-013-01-VA	F21-65-001-01-HA	T
1.3 CDTI, 1.6 Turbo, 1.7 CDTI, 2.0 Turbo	03.04 -	1025	860	E20-65-013-02-22	A, 20, 68			45-50	30					F21-65-013-02-VA	F21-65-001-01-HA	T
Pro-Tronic (Elektronische Performance Fahrwerksmodule | *Electronic Performance Suspension Moduls*)																
Alle Motorisierungen / *all motorisation*	03.04 -			AM65-65-013-02-22	A, 175, 223											
B12 Pro-Kit (Performance Komplettfahrwerke | *Performance Springs+Shocks*)																
1.4, 1.6, 1.8	03.04 -	970	860	E90-65-013-01-22	A, 18, 20, 68, 78, 101, 161			30	30					F11-65-007-05-VA	F6541002	T
1.3 CDTI, 1.6 Turbo, 1.7 CDTI, 1.9 CDTI, 1.9 CDTI 16V, 2.0 Turbo	03.04 -	1075	860	E90-65-013-02-22	A, 18, 20, 68, 78, 101, 161			30	30					F11-65-007-01-VA	F6541002	T
B12 Sportline (Performance Komplettfahrwerke Sport | *Sport Performance Springs+Shocks*)																
1.4, 1.6, 1.8	03.04 -	960	860	E95-65-013-01-22	A, 18, 20, 68, 78, 101, 161			45-50	30					F21-65-013-01-VA	F21-65-001-01-HA	T
1.3 CDTI, 1.6 Turbo, 1.7 CDTI, 2.0 Turbo	03.04 -	1025	860	E95-65-013-02-22	A, 18, 20, 68, 78, 101, 161			45-50	30					F21-65-013-02-VA	F21-65-001-01-HA	T
Pro-Street-S (Gewindefahrwerke - höhenverstellbar | *Coil-Overs-Adjustable Ride Hight*)																
1.3 CDTI, 1.4, 1.6, 1.6 Turbo, 1.7 CDTI, 1.8, 1.9 CDTI, 1.9 CDTI 16V, 2.0 Turbo	03.04 -	1070	955	PSS65-65-013-01-22	A, 21, 24, 25, 45, 160			30-60	30-60							T
ASTRA H Caravan																
ASTRA H Estate																
Pro-Kit (Performance Fahrwerksfedern | *Performance Springs*)																
1.4, 1.6, 1.8	08.04 -	970	940	E10-65-013-03-22	A, 18, 20, 68			30-35	25-30					F11-65-007-05-VA	F6542002	T
1.3 CDTI, 1.6 Turbo, 1.7 CDTI, 1.9 CDTI 16V, 1.9 CDTi, 2.0 Turbo	08.04 -	1075	940	E10-65-013-04-22	A, 18, 20, 68			30-35	25-30					F11-65-007-01-VA	F6542002	T
Sportline (Performance Fahrwerksfedern Sport | *Sport Performance Springs*)																
1.4, 1.6, 1.8	08.04 -	960	940	E20-65-013-03-22	A, 18, 20, 68			40-45	35					F21-65-013-01-VA	F21-65-013-03-HA	T
1.3 CDTI, 1.6 Turbo, 1.7 CDTI, 2.0 Turbo	08.04 -	1025	940	E20-65-013-04-22	A, 18, 20, 68			40-45	35					F21-65-013-02-VA	F21-65-013-03-HA	T
Pro-Tronic (Elektronische Performance Fahrwerksmodule | *Electronic Performance Suspension Moduls*)																
Alle Motorisierungen / *all motorisation*	08.04 -			AM65-65-013-02-22	A, 175, 223											
B12 Pro-Kit (Performance Komplettfahrwerke | *Performance Springs+Shocks*)																
1.4, 1.6, 1.8	08.04 -	970	940	E90-65-013-03-22	A, 18, 20, 68, 78, 101, 161			30-35	25-30					F11-65-007-05-VA	F6542002	T
1.3 CDTI, 1.6 Turbo, 1.7 CDTI, 1.9 CDTI, 1.9 CDTI 16V, 1.9 CDTi, 2.0 Turbo	08.04 -	1075	940	E90-65-013-04-22	A, 18, 20, 68, 78, 101, 161			30-35	25-30					F11-65-007-01-VA	F6542002	T
B12 Sportline (Performance Komplettfahrwerke Sport | *Sport Performance Springs+Shocks*)																
1.4, 1.6, 1.8	08.04 -	970	940	E95-65-013-03-22	A, 18, 20, 68, 78, 101, 161			40-45	35					F21-65-013-01-VA	F21-65-013-03-HA	T
1.3 CDTI, 1.6 Turbo, 1.7 CDTI, 1.9 CDTI, 1.9 CDTI 16V, 1.9 CDTi, 2.0 Turbo	08.04 -	1075	940	E95-65-013-04-22	A, 18, 20, 68, 78, 101, 161			40-45	35					F21-65-013-02-VA	F21-65-013-03-HA	T

OPEL

Modell	Baujahr	Achslast Vorne kg	Achslast Hinten kg	Artikel-Nr.	Hinweise	ab Nachtrag ...xx BE	bis Nachtrag ...xx BE	ca. Tieferl. Vorne mm	ca. Tieferl. Hinten mm	Ø Vorne mm	Ø Hinten mm	Verstellbarkeit Vorne	Verstellbarkeit Hinten	Ersatzteilbez. Vorne	Ersatzteilbez. Hinten	Gutachten
Model	*Year*	*Front Axle Load kg*	*Rear Axle Load kg*	*Part-No.*	*Notes*	*from suppl. ...xx of type approval*	*to suppl. ...xx of type approval*	*ca. Lowering Front mm*	*ca. Lowering Rear mm*	*Ø Front mm*	*Ø Rear mm*	*Adjustable Front*	*Adjustable Rear*	*Spare Part Marking Front*	*Spare Part Marking Rear*	*Homologation*
ASTRA H Caravan																
ASTRA H Estate																
Pro-Street-S (Gewindefahrwerke - höhenverstellbar | *Coil-Overs-Adjustable Ride Hight*)																
1.3 CDTI, 1.4, 1.6, 1.6 Turbo, 1.7 CDTI, 1.8, 1.9 CDTI, 1.9 CDTI 16V, 1.9 CDTi, 2.0 Turbo	08.04 -	1070	955	PSS65-65-013-01-22	A, 21, 24, 25, 45, 160			30-60	30-60							T
ASTRA H GTC																
Pro-Kit (Performance Fahrwerksfedern | *Performance Springs*)																
1.4, 1.6, 1.8	03.05 -	970	860	E10-65-013-01-22	A, 18, 20, 68			30	30					F11-65-007-05-VA	F6541002	T
1.3 CDTI, 1.6 Turbo, 1.7 CDTI, 1.7 CDTi, 1.9 CDTI, 1.9 CDTi, 1.9 CDTi 16V, 2.0 Turbo	03.05 -	1075	860	E10-65-013-02-22	A, 18, 20, 68			30	30					F11-65-007-01-VA	F6541002	T
Sportline (Performance Fahrwerksfedern Sport | *Sport Performance Springs*)																
1.4, 1.6, 1.8	03.05 -	960	860	E20-65-013-01-22	A, 20, 68			45-50	30					F21-65-013-01-VA	F21-65-001-01-HA	T
1.3 CDTI, 1.6 Turbo, 1.7 CDTI, 1.7 CDTi, 2.0 Turbo	03.05 -	1025	860	E20-65-013-02-22	A, 20, 68			45-50	30					F21-65-013-02-VA	F21-65-001-01-HA	T
Pro-Tronic (Elektronische Performance Fahrwerksmodule | *Electronic Performance Suspension Moduls*)																
Alle Motorisierungen / *all motorisation*	03.05 -			AM65-65-013-02-22	A, 175, 223											
2.0 Turbo	03.05 -			AM65-65-013-01-22	A, 175											
B12 Pro-Kit (Performance Komplettfahrwerke | *Performance Springs+Shocks*)																
1.4, 1.6, 1.8	03.05 -	970	860	E90-65-013-01-22	A, 18, 20, 68, 78, 101, 161			30	30					F11-65-007-05-VA	F6541002	T
1.3 CDTI, 1.6 Turbo, 1.7 CDTi, 1.9 CDTI, 1.9 CDTi, 1.9 CDTi 16V, 2.0 Turbo	03.05 -	1075	860	E90-65-013-02-22	A, 18, 20, 68, 78, 101, 161			30	30					F11-65-007-01-VA	F6541002	T
B12 Sportline (Performance Komplettfahrwerke Sport | *Sport Performance Springs+Shocks*)																
1.4, 1.6, 1.8	03.05 -	960	860	E95-65-013-01-22	A, 20, 68, 78, 101, 161			45-50	30					F21-65-013-01-VA	F21-65-001-01-HA	T
1.3 CDTI, 1.6 Turbo, 1.7 CDTI, 1.7 CDTi, 2.0 Turbo	03.05 -	1025	860	E95-65-013-02-22	A, 20, 68, 78, 101, 161			45-50	30					F21-65-013-02-VA	F21-65-001-01-HA	T
Pro-Street-S (Gewindefahrwerke - höhenverstellbar | *Coil-Overs-Adjustable Ride Hight*)																
1.3 CDTI, 1.4, 1.6, 1.6 Turbo, 1.7 CDTI, 1.7 CDTi, 1.8, 1.9 CDTI, 1.9 CDTi, 1.9 CDTi 16V, 2.0 Turbo	03.05 -	1070	955	PSS65-65-013-01-22	A, 21, 24, 25, 45, 160			30-60	30-60							T
ASTRA H Stufenheck																
ASTRA H Saloon																
Pro-Kit (Performance Fahrwerksfedern | *Performance Springs*)																
1.6, 1.8	02.07 -	970	860	E10-65-013-01-22	A, 18, 20, 68			30	30					F11-65-007-05-VA	F6541002	T
1.3 CDTi, 1.7 CDTI, 1.7 CDTi	02.07 -	1075	860	E10-65-013-02-22	A, 18, 20, 68			30	30					F11-65-007-01-VA	F6541002	T
Sportline (Performance Fahrwerksfedern Sport | *Sport Performance Springs*)																
1.6, 1.8	02.07 -	960	860	E20-65-013-01-22	A, 20, 68			45-50	30					F21-65-013-01-VA	F21-65-001-01-HA	T
1.3 CDTi, 1.7 CDTI, 1.7 CDTi	02.07 -	1025	860	E20-65-013-02-22	A, 20, 68			45-50	30					F21-65-013-02-VA	F21-65-001-01-HA	T
Pro-Tronic (Elektronische Performance Fahrwerksmodule | *Electronic Performance Suspension Moduls*)																
Alle Motorisierungen / *all motorisation*	02.07 -			AM65-65-013-02-22	A, 175, 223											
B12 Pro-Kit (Performance Komplettfahrwerke | *Performance Springs+Shocks*)																
1.6, 1.8	02.07 -	970	860	E90-65-013-01-22	A, 18, 20, 68, 78, 101, 161			30	30					F11-65-007-05-VA	F6541002	T
1.3 CDTi, 1.7 CDTI	02.07 -	1075	860	E90-65-013-02-22	A, 18, 20, 68, 78, 101, 161			30	30					F11-65-007-01-VA	F6541002	T
B12 Sportline (Performance Komplettfahrwerke Sport | *Sport Performance Springs+Shocks*)																
1.6, 1.8	02.07 -	960	860	E95-65-013-01-22	A, 20, 68, 78, 101, 161			45-50	30					F21-65-013-01-VA	F21-65-001-01-HA	T
1.3 CDTi, 1.7 CDTI	02.07 -	1025	860	E95-65-013-02-22	A, 20, 68, 78, 101, 161			45-50	30					F21-65-013-02-VA	F21-65-001-01-HA	T
Pro-Street-S (Gewindefahrwerke - höhenverstellbar | *Coil-Overs-Adjustable Ride Hight*)																
1.3 CDTI, 1.6, 1.7 CDTI, 1.7 CDTi, 1.8	02.07 -	1070	955	PSS65-65-013-01-22	A, 21, 24, 25, 45, 160			30-60	30-60							T
ASTRA H TwinTop																
Pro-Kit (Performance Fahrwerksfedern | *Performance Springs*)																
1.6, 1.8	09.05 -	1000	955	E10-65-013-06-22	A, 18, 20			30	30					F11-65-007-01-VA	F6542002	T
1.6 Turbo, 1.9 CDTi, 2.0 Turbo	09.05 -	1070	955	E10-65-013-07-22	A, 18, 20			30	30					F11-65-007-02-VA	F6542002	T
Pro-Tronic (Elektronische Performance Fahrwerksmodule | *Electronic Performance Suspension Moduls*)																
Alle Motorisierungen / *all motorisation*	09.05 -			AM65-65-013-02-22	A, 175, 223											
B12 Pro-Kit (Performance Komplettfahrwerke | *Performance Springs+Shocks*)																
1.6, 1.8	09.05 -	1000	955	E90-65-013-06-22	A, 18, 20, 78, 101, 161			30	30					F11-65-007-01-VA	F6542002	T
1.6 Turbo, 1.9 CDTi, 2.0 Turbo	09.05 -	1070	955	E90-65-013-07-22	A, 18, 20, 78, 101, 161			30	30					F11-65-007-02-VA	F6542002	T
Pro-Street-S (Gewindefahrwerke - höhenverstellbar | *Coil-Overs-Adjustable Ride Hight*)																
1.6, 1.6 Turbo, 1.8, 1.9 CDTi, 2.0 Turbo	09.05 -	1070	955	PSS65-65-013-01-22	A, 21, 24, 25, 45, 160			30-60	30-60							T
ASTRA H Van																
Pro-Kit (Performance Fahrwerksfedern | *Performance Springs*)																
1.3 CDTI, 1.7 CDTI, 1.9 CDTI, 1.9 CDTI 16V	03.04 -	1075	940	E10-65-013-04-22	A, 18, 20, 68			30-35	25-30					F11-65-007-01-VA	F6542002	T
Sportline (Performance Fahrwerksfedern Sport | *Sport Performance Springs*)																
1.3 CDTI, 1.7 CDTI	03.04 -	1025	940	E20-65-013-04-22	A, 18, 20, 68			40-45	35					F21-65-013-02-VA	F21-65-013-03-HA	T
Pro-Tronic (Elektronische Performance Fahrwerksmodule | *Electronic Performance Suspension Moduls*)																
Alle Motorisierungen / *all motorisation*	02.04 -			AM65-65-013-02-22	A, 175, 223											
B12 Pro-Kit (Performance Komplettfahrwerke | *Performance Springs+Shocks*)																
1.3 CDTI, 1.7 CDTI, 1.9 CDTI, 1.9 CDTI 16V	03.04 -	1075	940	E90-65-013-04-22	A, 18, 20, 68, 78, 101, 161			30-35	25-30					F11-65-007-01-VA	F6542002	T
B12 Sportline (Performance Komplettfahrwerke Sport | *Sport Performance Springs+Shocks*)																
1.3 CDTI, 1.7 CDTI	03.04 -	1025	945	E95-65-013-04-22	A, 18, 20, 68, 78, 101, 161			40-45	35					F21-65-013-02-VA	F21-65-013-03-HA	T
Pro-Street-S (Gewindefahrwerke - höhenverstellbar | *Coil-Overs-Adjustable Ride Hight*)																
1.3 CDTI, 1.7 CDTI, 1.9 CDTI, 1.9 CDTI 16V	03.04 -	1070	955	PSS65-65-013-01-22	A, 21, 24, 25, 45, 160			30-60	30-60							T

Modell	Baujahr	Achslast Vorne kg	Achslast Hinten kg	Artikel-Nr.	Hinweise	ab Nachtrag ...xx BE	bis Nachtrag ...xx BE	ca. Tieferl. Vorne mm	ca. Tieferl. Hinten mm	Ø Vorne mm	Ø Hinten mm	Verstellbarkeit Vorne	Verstellbarkeit Hinten	Ersatzteilbez. Vorne	Ersatzteilbez. Hinten	Gutachten
Model	*Year*	*Front Axle Load kg*	*Rear Axle Load kg*	*Part-No.*	*Notes*	*from suppl. ...xx of type approval*	*to suppl. ...xx of type approval*	*ca. Lowering Front mm*	*ca. Lowering Rear mm*	*Ø Front mm*	*Ø Rear mm*	*Adjustable Front*	*Adjustable Rear*	*Spare Part Marking Front*	*Spare Part Marking Rear*	*Homologation*
ASTRA J																
Pro-Kit (Performance Fahrwerksfedern | *Performance Springs*)																
1.4, 1.6	12.09 -	995	1020	E10-65-020-01-22	A, 18, 20			40	40					F11-65-019-01-VA	F6549002	ABE
1.4 Turbo, 1.6 Turbo, 1.6 SIDI, 1.3 CDTi, 1.6 CDTi	12.09 -	1080	1020	E10-65-020-02-22	A, 18, 20			40	40					F11-65-019-02-VA	F6549002	ABE
1.6 CDTi, 1.7 CDTi, 2.0 CDTi, 2.0 BiTurbo CDTi	12.09 -	1175	1020	E10-65-020-03-22	A, 18, 20			40	40					F11-65-019-04-VA	F6549002	ABE
B12 Pro-Kit (Performance Komplettfahrwerke | *Performance Springs+Shocks*)																
1.4, 1.4 Turbo, 1.6, 1.6 SIDI	12.09 -	995	1020	E90-65-020-01-22	A, 18, 20, 21, 78, 161			40	40					F11-65-019-01-VA	F6549002	ABE
1.4 Turbo, 1.6 Turbo, 1.6 SIDI, 1.3 CDTi, 1.6 CDTi	12.09 -	1080	1020	E90-65-020-02-22	A, 18, 20, 21, 78, 161			40	40					F11-65-019-02-VA	F6549002	ABE
1.6 CDTi, 1.7 CDTi, 2.0 CDTi, 2.0 BiTurbo CDTi	12.09 -	1175	1020	E90-65-020-03-22	A, 18, 20, 21, 78, 161			40	40					F11-65-019-04-VA	F6549002	ABE
Pro-Street-S (Gewindefahrwerke - höhenverstellbar | *Coil-Overs-Adjustable Ride Hight*)																
1.4, 1.4 Turbo, 1.6, 1.6 SIDI, 1.6 Turbo, 1.3 CDTI, 1.6 CDTI, 1.7 CDTI, 2.0 BiTurbo CDTI, 2.0 CDTI	12.09 -	1155	1000	PSS65-65-020-01-22	A, 18, 20, 24, 25, 45, 160			40-70	45-75							T
ASTRA J Stufenheck *ASTRA J Saloon*																
Pro-Kit (Performance Fahrwerksfedern | *Performance Springs*)																
1.4	06.12 -	995	1020	E10-65-020-01-22	A, 18, 20			40	40					F11-65-019-01-VA	F6549002	ABE
1.4 Turbo, 1.6 Turbo, 1.6 SIDI, 1.3 CDTi, 1.6 CDTi	06.12 -	1080	1020	E10-65-020-02-22	A, 18, 20			40	40					F11-65-019-02-VA	F6549002	ABE
1.6 CDTI, 1.7 CDTI	06.12 -	1175	1020	E10-65-020-03-22	A, 18, 20			40	40					F11-65-019-04-VA	F6549002	ABE
B12 Pro-Kit (Performance Komplettfahrwerke | *Performance Springs+Shocks*)																
1.4	06.12 -	995	1020	E90-65-020-01-22	A, 18, 20, 21, 78, 161			40	40					F11-65-019-01-VA	F6549002	ABE
1.4 Turbo, 1.6 Turbo, 1.6 SIDI, 1.3 CDTi, 1.6 CDTi	06.12 -	1080	1020	E90-65-020-02-22	A, 18, 20, 21, 78, 161			40	40					F11-65-019-02-VA	F6549002	ABE
1.6 CDTI, 1.7 CDTI	06.12 -	1175	1020	E90-65-020-03-22	A, 18, 20, 21, 78, 161			40	40					F11-65-019-04-VA	F6549002	ABE
Pro-Street-S (Gewindefahrwerke - höhenverstellbar | *Coil-Overs-Adjustable Ride Hight*)																
1.4, 1.4 Turbo, 1.6, 1.6 Turbo, 1.6 SIDI, 1.3 CDTi, 1.6 CDTi, 1.7 CDTi	06.12 -	1155	1000	PSS65-65-020-01-22	A, 18, 20, 24, 25, 45, 160			40-70	45-75							T
ASTRA GTC J																
Pro-Kit (Performance Fahrwerksfedern | *Performance Springs*)																
1.4, 1.6, 1.6 SIDI	10.11 -	1080	930	E10-65-020-01-22	A, 18, 20			30	30					F11-65-019-01-VA	F6549002	ABE
1.6 SIDI, 1.8, 1.7 CDTi, 2.0 CDTi, 2.0 BiTurbo CDTi	04.12 -	1160	930	E10-65-020-02-22	A, 18, 20			30	30					F11-65-019-02-VA	F6549002	ABE
1.7 CDTI, 1.8, 2.0 BiTurbo CDTI, 2.0 CDTI	10.11 -	1160	930	E10-65-020-02-22	A, 18, 20			25	25					F11-65-019-02-VA	F6549002	ABE
Pro-Tronic (Elektronische Performance Fahrwerksmodule | *Electronic Performance Suspension Moduls*)																
2.0 OPC	10.11 -			AM65-65-013-01-22	A, 175											
B12 Pro-Kit (Performance Komplettfahrwerke | *Performance Springs+Shocks*)																
1.4, 1.6, 1.6 SIDI	10.11 -	1080	930	E90-65-020-09-22	A, 18, 20, 78, 161			30	30					F11-65-019-01-VA	F6549002	ABE
1.6 SIDI, 1.8, 1.7 CDTi, 2.0 CDTi, 2.0 BiTurbo CDTi	04.12 -	1160	930	E90-65-020-10-22	A, 18, 20, 78, 161			25	25					F11-65-019-02-VA	F6549002	ABE
2.0	10.11 -	1160	930	E90-65-020-10-22	A, 18, 20, 78, 161			30	30					F11-65-019-02-VA	F6549002	ABE
ASTRA K																
Pro-Kit (Performance Fahrwerksfedern | *Performance Springs*)																
1.0, 1.4, 1.4 Turbo, 1.6 Turbo	06.15 -	950	950	E10-65-031-01-22	A, 18, 20			30	30					F11-65-031-01-FA	F11-65-031-01-RA	T
1.6 CDTi, 1.6 BiTurbo CDTi	06.15 -	1020	950	E10-65-031-02-22	A, 18, 20			30	30					F11-65-031-02-FA	F11-65-031-01-RA	T
ASTRA Sports Tourer (J)																
Pro-Kit (Performance Fahrwerksfedern | *Performance Springs*)																
1.4, 1.6	10.10 -	995	1100	E10-65-020-04-22	A, 18, 20			35	35					F11-65-019-01-VA	F11-23-007-01-HA	ABE
1.3 CDTI, 1.4 Turbo, 1.6 SIDI, 1.6 Turbo	10.10 -	1080	1100	E10-65-020-05-22	A, 18, 20			35	35					F11-65-019-02-VA	F11-23-007-01-HA	ABE
1.6 SIDI, 1.6 Turbo, 1.7 CDTi, 2.0 CDTi, 2.0 BiTurbo CDTi	10.10 -	1175	1100	E10-65-020-06-22	A, 18, 20			35	35					F11-65-019-04-VA	F11-23-007-01-HA	ABE
B12 Pro-Kit (Performance Komplettfahrwerke | *Performance Springs+Shocks*)																
1.4, 1.6	10.10 -	995	1100	E90-65-020-04-22	A, 18, 20, 78, 161			35	35					F11-65-019-01-VA	F11-23-007-01-HA	ABE
1.4 Turbo, 1.6 Turbo, 1.6 SIDI, 1.3 CDTi, 1.6 CDTi	10.10 -	1080	1100	E90-65-020-05-22	A, 18, 20, 78, 161			35	35					F11-65-019-02-VA	F11-23-007-01-HA	ABE
1.6 SIDI, 1.6 Turbo, 1.6 CDTi, 1.7 CDTi, 2.0 CDTi, 2.0 BiTurbo CDTi	10.10 -	1175	1100	E90-65-020-06-22	A, 18, 20, 78, 161			35	35					F11-65-019-04-VA	F11-23-007-01-HA	ABE
ASTRA Sports Tourer (K)																
Pro-Kit (Performance Fahrwerksfedern | *Performance Springs*)																
1.0, 1.4, 1.4 Turbo, 1.6 Turbo	06.15 -	950	950	E10-65-031-03-22	A, 18, 20			30	30					F11-65-031-01-FA	F11-65-031-03-RA	T
1.6 CDTi, 1.6 BiTurbo CDTi	06.15 -	1020	950	E10-65-031-04-22	A, 18, 20			30	30					F11-65-031-02-FA	F11-65-031-03-RA	T
CALIBRA A (85_)																
Pro-Kit (Performance Fahrwerksfedern | *Performance Springs*)																
2.0 i, 2.0 i 16V, 2.0 i 16V 4x4, 2.0 i 4x4	06.90 - 07.97	885	880	E6518-140	A, 18			30	30					F6518001	F6518002	T
2.0 i Turbo 4x4	03.92 - 07.97	940	880	E6518-240	A, 18			25	25					F6517001	F6518002	T
2.5 i V6	04.93 - 07.97	980	880	E6530-140	A, 18, 20			30	30					F6529001	F6518002	T
B12 Pro-Kit (Performance Komplettfahrwerke | *Performance Springs+Shocks*)																
2.0 i, 2.0 i 16V, 2.0 i 16V 4x4, 2.0 i 4x4	06.90 - 07.97	885	880	E90-65-004-01-22	A, 18, 78, 161			30	30					F6518001	F6518002	T
2.0 i Turbo 4x4	03.92 - 07.97	940	880	E90-65-004-02-22	A, 18, 78, 161			25	25					F6517001	F6518002	T

Modell	Baujahr	Achslast Vorne kg	Achslast Hinten kg	Artikel-Nr.	Hinweise	ab Nachtrag ...xx BE	bis Nachtrag ...xx BE	ca. Tieferl. Vorne mm	ca. Tieferl. Hinten mm	Ø Vorne mm	Ø Hinten mm	Verstellbarkeit Vorne	Verstellbarkeit Hinten	Ersatzteilbez. Vorne	Ersatzteilbez. Hinten	Gutachten
Model	*Year*	*Front Axle Load kg*	*Rear Axle Load kg*	*Part-No.*	*Notes*	*from suppl. ...xx of type approval*	*to suppl. ...xx of type approval*	*ca. Lowering Front mm*	*ca. Lowering Rear mm*	*Ø Front mm*	*Ø Rear mm*	*Adjustable Front*	*Adjustable Rear*	*Spare Part Marking Front*	*Spare Part Marking Rear*	*Homologation*
CASCADA (W13)																
Pro-Kit (Performance Fahrwerksfedern | *Performance Springs*)																
1.4, 1.4 Turbo, 1.6 SIDI	03.13 -	1160	1010	E10-65-020-07-22	A, 18, 20			25	25					F11-65-019-02-VA	F6549002	T
2.0 CDTI	03.13 -	1215	1010	E10-65-020-08-22	A, 18, 20			25	25					F11-65-019-04-VA	F6549002	T
CORSA A CC (93_, 94_, 98_, 99_) ***CORSA A Hatchback (93_, 94_, 98_, 99_)***																
Sportline (Performance Fahrwerksfedern Sport | *Sport Performance Springs*)																
1.0, 1.2, 1.2 N, 1.2 S, 1.2 i, 1.3, 1.3 GL, 1.3 S, 1.3 i, 1.4 S, 1.4 Si, 1.4 i	09.82 - 03.93	790	700	E20-65-002-01-22	A, 20			45-50	30-35					F21-65-002-01-VA	F21-65-002-01-HA	T
B12 Sportline (Performance Komplettfahrwerke Sport | *Sport Performance Springs+Shocks*)																
1.0, 1.2, 1.2 N, 1.2 S, 1.2 i, 1.3, 1.3 GL, 1.3 S, 1.3 i, 1.4 S, 1.4 Si, 1.4 i	09.82 - 03.93	790	700	E95-65-002-01-22	A, 20, 78, 161			45-50	30-35					F21-65-002-01-VA	F21-65-002-01-HA	T
CORSA A TR (91_, 92_, 96_, 97_)																
Sportline (Performance Fahrwerksfedern Sport | *Sport Performance Springs*)																
1.0, 1.2 N, 1.2 S, 1.2 i, 1.3, 1.3 GL, 1.3 S, 1.4 S, 1.4 i	09.82 - 03.93	790	700	E20-65-002-01-22	A, 20			45-50	30-35					F21-65-002-01-VA	F21-65-002-01-HA	T
B12 Sportline (Performance Komplettfahrwerke Sport | *Sport Performance Springs+Shocks*)																
1.0, 1.2 N, 1.2 S, 1.2 i, 1.3, 1.3 GL, 1.3 S, 1.4 S, 1.4 i	09.82 - 03.93	790	700	E95-65-002-01-22	A, 20, 78, 161			45-50	30-35					F21-65-002-01-VA	F21-65-002-01-HA	T
CORSA B (73_, 78_, 79_)																
Pro-Kit (Performance Fahrwerksfedern | *Performance Springs*)																
1.0 i 12V, 1.2 i, 1.2 i 16V, 1.4, 1.4 Si, 1.4 i, 1.4 i 16V, 1.6 GSI 16V, 1.6 i 16V	03.93 - 09.00	790	700	E6528-140	A, 18, 20			30	30					F6528001	F6528102	T
Sportline (Performance Fahrwerksfedern Sport | *Sport Performance Springs*)																
1.0 i 12V, 1.2 i, 1.2 i 16V, 1.4, 1.4 Si, 1.4 i, 1.4 i 16V, 1.6 GSI 16V, 1.6 i 16V	03.93 - 09.00	790	700	E20-65-002-01-22	A, 20			45-50	25					F21-65-002-01-VA	F21-65-002-01-HA	T
B12 Pro-Kit (Performance Komplettfahrwerke | *Performance Springs+Shocks*)																
1.0 i 12V, 1.2 i, 1.2 i 16V, 1.4, 1.4 Si, 1.4 i, 1.4 i 16V, 1.6 GSI 16V, 1.6 i 16V	03.93 - 09.00	790	700	E90-65-002-01-22	A, 18, 20, 78, 161			30	30					F6528001	F6528102	T
B12 Sportline (Performance Komplettfahrwerke Sport | *Sport Performance Springs+Shocks*)																
1.0 i 12V, 1.2 i, 1.2 i 16V, 1.4, 1.4 Si, 1.4 i, 1.4 i 16V, 1.6 GSI 16V, 1.6 i 16V	03.93 - 09.00	790	700	E95-65-002-01-22	A, 20, 78, 161			45-50	25					F21-65-002-01-VA	F21-65-002-01-HA	T
CORSA C (F08, F68)																
Pro-Kit (Performance Fahrwerksfedern | *Performance Springs*)																
1.0, 1.2, 1.2 Twinport, 1.4, 1.4 Twinport	09.00 -	820	760	E10-65-002-01-22	A, 18, 20			30	30					F11-65-002-01-VA	F6528102	T
1.3 CDTI, 1.7 CDTI, 1.7 DI, 1.7 DTI, 1.8	09.00 -	940	760	E10-65-002-02-22	A, 18, 20			30	30					F11-65-002-02-VA	F6528102	T
B12 Pro-Kit (Performance Komplettfahrwerke | *Performance Springs+Shocks*)																
1.0, 1.2, 1.2 Twinport, 1.4, 1.4 Twinport	09.00 -	820	760	E90-65-002-02-22	A, 18, 20, 78, 89, 161			30	30					F11-65-002-01-VA	F6528102	T
1.0, 1.2, 1.2 Twinport, 1.4, 1.4 Twinport	09.00 -	820	760	E90-65-002-03-22	A, 18, 20, 78, 90, 161			30	30					F11-65-002-01-VA	F6528102	T
1.3 CDTI, 1.7 CDTI, 1.7 DI, 1.7 DTI, 1.8	09.00 -	940	760	E90-65-002-04-22	A, 18, 20, 78, 89, 161			30	30					F11-65-002-02-VA	F6528102	T
1.3 CDTI, 1.7 CDTI, 1.7 DI, 1.7 DTI, 1.8	09.00 -	940	760	E90-65-002-05-22	A, 18, 20, 78, 90, 161			30	30					F11-65-002-02-VA	F6528102	T
CORSA D																
Pro-Kit (Performance Fahrwerksfedern | *Performance Springs*)																
1.0, 1.2, 1.4	07.06 -	885	845	E10-65-015-01-22	A, 18, 20			30	30					F11-65-015-01-VA	F11-65-015-01-HA	T
1.4, 1.3 CDTI, 1.7 CDTI	07.06 -	1000	845	E10-65-015-02-22	A, 18, 20			30	30					F11-65-015-02-VA	F11-65-015-01-HA	T
1.6 Turbo	07.06 -	1000	845	E10-65-015-02-22	A, 18, 20, 212			15	15					F11-65-015-02-VA	F11-65-015-01-HA	T
Sportline (Performance Fahrwerksfedern Sport | *Sport Performance Springs*)																
1.0, 1.2, 1.4	07.06 -	885	845	E20-65-015-01-22	A, 18, 20			40	30					F21-65-015-01-VA	F21-65-015-01-HA	T
1.4, 1.3 CDTI, 1.7 CDTI	07.06 -	990	845	E20-65-015-02-22	A, 18, 20			40	30					F21-65-015-02-VA	F21-65-015-01-HA	T
1.6 Turbo	07.06 -	990	845	E20-65-015-02-22	A, 18, 20, 212			25	20					F21-65-015-02-VA	F21-65-015-01-HA	T
1.6 Turbo OPC	07.06 -	990	845	E20-65-015-02-22	A, 18, 20, 212			15	10					F21-65-015-02-VA	F21-65-015-01-HA	T
B12 Pro-Kit (Performance Komplettfahrwerke | *Performance Springs+Shocks*)																
1.0, 1.2, 1.4	07.06 -	885	845	E90-65-015-01-22	A, 18, 20, 78, 161, 196			30	30					F11-65-015-01-VA	F11-65-015-01-HA	T
1.4, 1.3 CDTI, 1.7 CDTI	07.06 -	1000	845	E90-65-015-02-22	A, 18, 20, 78, 161, 196			30	30					F11-65-015-02-VA	F11-65-015-01-HA	T
1.6 Turbo	02.07 -	1000	845	E90-65-015-04-22	A, 18, 20, 78, 161, 197			15	15					F11-65-015-02-VA	F11-65-015-01-HA	T
B12 Sportline (Performance Komplettfahrwerke Sport | *Sport Performance Springs+Shocks*)																
1.0, 1.2, 1.4	07.06 -	885	845	E95-65-015-01-22	A, 18, 20, 78, 161, 196			40	30					F21-65-015-01-VA	F21-65-015-01-HA	T
1.4, 1.3 CDTI, 1.7 CDTI	07.06 -	1000	845	E95-65-015-02-22	A, 18, 20, 78, 161, 196			40	30					F21-65-015-02-VA	F21-65-015-01-HA	T
1.6 Turbo	07.06 -	1000	845	E95-65-015-04-22	A, 18, 20, 78, 161, 197, 212			25	20					F21-65-015-02-VA	F21-65-015-01-HA	T
1.6 Turbo OPC	07.06 -	1000	845	E95-65-015-04-22	A, 18, 20, 78, 161, 197, 212			15	10					F21-65-015-02-VA	F21-65-015-01-HA	T
Pro-Street-S (Gewindefahrwerke - höhenverstellbar | *Coil-Overs-Adjustable Ride Hight*)																
1.0, 1.2, 1.4	07.06 -	855	800	PSS65-30-010-01-22	A, 25, 45, 160			25-55	25-55							T
1.4, 1.3 CDTI, 1.7 CDTI	07.06 -	990	800	PSS65-30-010-02-22	A, 25, 45, 160			25-55	25-55							T
CORSA D Van																
Pro-Kit (Performance Fahrwerksfedern | *Performance Springs*)																
1.0, 1.2	07.06 -	885	845	E10-65-015-01-22	A, 18, 20			30	30					F11-65-015-01-VA	F11-65-015-01-HA	T
1.3 CDTI	07.06 -	1000	845	E10-65-015-02-22	A, 18, 20			30	30					F11-65-015-02-VA	F11-65-015-01-HA	T
Sportline (Performance Fahrwerksfedern Sport | *Sport Performance Springs*)																
1.0, 1.2	07.06 -	885	845	E20-65-015-01-22	A, 18, 20			40	30					F21-65-015-01-VA	F21-65-015-01-HA	T
1.3 CDTI	07.06 -	990	845	E20-65-015-02-22	A, 18, 20			40	30					F21-65-015-02-VA	F21-65-015-01-HA	T

OPEL

Modell	Baujahr	Achslast Vorne kg	Achslast Hinten kg	Artikel-Nr.	Hinweise	ab Nachtrag ...xx BE	bis Nachtrag ...xx BE	ca. Tieferl. Vorne mm	ca. Tieferl. Hinten mm	Ø Vorne mm	Ø Hinten mm	Verstellbarkeit Vorne	Verstellbarkeit Hinten	Ersatzteilbez. Vorne	Ersatzteilbez. Hinten	Gutachten
Model	*Year*	*Front Axle Load kg*	*Rear Axle Load kg*	*Part-No.*	*Notes*	*from suppl. ...xx of type approval*	*to suppl. ...xx of type approval*	*ca. Lowering Front mm*	*ca. Lowering Rear mm*	*Ø Front mm*	*Ø Rear mm*	*Adjustable Front*	*Adjustable Rear*	*Spare Part Marking Front*	*Spare Part Marking Rear*	*Homologation*
CORSA D Van																
B12 Pro-Kit (Performance Komplettfahrwerke | *Performance Springs+Shocks*)																
1.0, 1.2	07.06 -	885	845	E90-65-015-01-22	A, 18, 20, 78, 161, 196			30	30					F11-65-015-01-VA	F11-65-015-01-HA	T
1.3 CDTI	07.06 -	1000	845	E90-65-015-02-22	A, 18, 20, 78, 161, 196			30	30					F11-65-015-02-VA	F11-65-015-01-HA	T
B12 Sportline (Performance Komplettfahrwerke Sport | *Sport Performance Springs+Shocks*)																
1.0, 1.2	07.06 -	885	845	E95-65-015-01-22	A, 18, 20, 78, 161, 196			40	30					F21-65-015-01-VA	F21-65-015-01-HA	T
1.3 CDTI	07.06 -	1000	845	E95-65-015-02-22	A, 18, 20, 78, 161, 196			40	30					F21-65-015-02-VA	F21-65-015-01-HA	T
Pro-Street-S (Gewindefahrwerke - höhenverstellbar | *Coil-Overs-Adjustable Ride Hight*)																
1.0, 1.2	07.06 -	855	800	PSS65-30-010-01-22	A, 25, 45, 160			25-55	25-55							T
1.3 CDTI	07.06 -	990	800	PSS65-30-010-02-22	A, 25, 45, 160			25-55	25-55							T
CORSA E																
Pro-Kit (Performance Fahrwerksfedern | *Performance Springs*)																
1.0, 1.2, 1.4	09.14 -	885	845	E10-65-015-01-22	A, 18, 20			30	30					F11-65-015-01-VA	F11-65-015-01-HA	T
1.4 Turbo, 1.3 CDTI	09.14 -	1000	845	E10-65-015-02-22	A, 18, 20			30	30					F11-65-015-02-VA	F11-65-015-01-HA	T
Sportline (Performance Fahrwerksfedern Sport | *Sport Performance Springs*)																
1.0, 1.2, 1.4	09.14 -	885	845	E20-65-015-01-22	A, 18, 20			40	30					F21-65-015-01-VA	F21-65-015-01-HA	T
1.4 Turbo, 1.3 CDTI	09.14 -	990	845	E20-65-015-02-22	A, 18, 20			40	30					F21-65-015-02-VA	F21-65-015-01-HA	T
B12 Pro-Kit (Performance Komplettfahrwerke | *Performance Springs+Shocks*)																
1.0, 1.2, 1.4	09.14 -	885	845	E90-65-015-01-22	A, 18, 20, 78, 161, 196			30	30					F11-65-015-01-VA	F11-65-015-01-HA	T
1.4 Turbo, 1.3 CDTI	09.14 -	1000	845	E90-65-015-02-22	A, 18, 20, 78, 161, 196			30	30					F11-65-015-02-VA	F11-65-015-01-HA	T
B12 Sportline (Performance Komplettfahrwerke Sport | *Sport Performance Springs+Shocks*)																
1.0, 1.2, 1.4	09.14 -	885	845	E95-65-015-01-22	A, 18, 20, 78, 161, 196			40	30					F21-65-015-01-VA	F21-65-015-01-HA	T
1.4 Turbo, 1.3 CDTI	09.14 -	1000	845	E95-65-015-02-22	A, 18, 20, 78, 161, 196			40	30					F21-65-015-02-VA	F21-65-015-01-HA	T
Pro-Street-S (Gewindefahrwerke - höhenverstellbar | *Coil-Overs-Adjustable Ride Hight*)																
1.0, 1.2, 1.4	09.14 -	855	800	PSS65-30-010-01-22	A, 25, 45, 160			25-55	25-55							T
1.4 Turbo, 1.3 CDTI	09.14 -	990	800	PSS65-30-010-02-22	A, 25, 45, 160			25-55	25-55							T
CORSA E Van																
Pro-Kit (Performance Fahrwerksfedern | *Performance Springs*)																
1.2, 1.4	09.14 -	885	845	E10-65-015-01-22	A, 18, 20			30	30					F11-65-015-01-VA	F11-65-015-01-HA	T
1.3 CDTI	09.14 -	1000	845	E10-65-015-02-22	A, 18, 20			30	30					F11-65-015-02-VA	F11-65-015-01-HA	T
Sportline (Performance Fahrwerksfedern Sport | *Sport Performance Springs*)																
1.2, 1.4	09.14 -	885	845	E20-65-015-01-22	A, 18, 20			40	30					F21-65-015-01-VA	F21-65-015-01-HA	T
1.3 CDTI	09.14 -	990	845	E20-65-015-02-22	A, 18, 20			40	30					F21-65-015-02-VA	F21-65-015-01-HA	T
B12 Pro-Kit (Performance Komplettfahrwerke | *Performance Springs+Shocks*)																
1.2, 1.4	09.14 -	885	845	E90-65-015-01-22	A, 18, 20, 78, 161, 196			30	30					F11-65-015-01-VA	F11-65-015-01-HA	T
1.3 CDTI	09.14 -	1000	845	E90-65-015-02-22	A, 18, 20, 78, 161, 196			30	30					F11-65-015-02-VA	F11-65-015-01-HA	T
B12 Sportline (Performance Komplettfahrwerke Sport | *Sport Performance Springs+Shocks*)																
1.2, 1.4	09.14 -	885	845	E95-65-015-01-22	A, 18, 20, 78, 161, 196			40	30					F21-65-015-01-VA	F21-65-015-01-HA	T
1.3 CDTI	09.14 -	1000	845	E95-65-015-02-22	A, 18, 20, 78, 161, 196			40	30					F21-65-015-02-VA	F21-65-015-01-HA	T
Pro-Street-S (Gewindefahrwerke - höhenverstellbar | *Coil-Overs-Adjustable Ride Hight*)																
1.2, 1.4	09.14 -	855	800	PSS65-30-010-01-22	A, 25, 45, 160			25-55	25-55							T
1.3 CDTI	09.14 -	990	800	PSS65-30-010-02-22	A, 25, 45, 160			25-55	25-55							T
GT Cabriolet ***GT Convertible***																
Pro-Kit (Performance Fahrwerksfedern | *Performance Springs*)																
2.0	06.07 -	880	900	E10-65-017-01-22	A, 18, 20			25	25					F11-65-017-01-VA	F11-65-017-01-HA	T
INSIGNIA																
Pro-Kit (Performance Fahrwerksfedern | *Performance Springs*)																
1.4, 1.6, 1.8	07.08 - 07.13	1030	1160	E10-65-019-01-22	A, 18, 20			30	30					F11-65-019-01-VA	F11-65-011-01-HA	T
1.6 SIDI, 1.6 Turbo, 2.0 Turbo, 2.0 E85 Turbo, 2.0 CDTI, 2.0 Biturbo CDTI	07.08 - 07.13	1175	1160	E10-65-019-02-22	A, 18, 20			30	30					F11-65-019-02-VA	F11-65-011-01-HA	T
1.4, 1.6, 1.8	07.13 -	1030	1160	E10-65-019-14-22	A, 18, 20			30	30					F11-65-019-14-VA	F11-65-011-01-HA	T
1.6 SIDI, 1.6 Turbo, 2.0 Turbo, 2.0 E85 Turbo, 2.0 CDTI, 2.0 Biturbo CDTI	07.13 -	1175	1160	E10-65-019-15-22	A, 18, 20			30	30					F11-65-019-15-VA	F11-65-011-01-HA	T
Pro-Tronic (Elektronische Performance Fahrwerksmodule | *Electronic Performance Suspension Moduls*)																
Alle Motorisierungen / *all motorisation*	07.08 -			AM65-65-013-01-22	A, 175											
B12 Pro-Kit (Performance Komplettfahrwerke | *Performance Springs+Shocks*)																
1.4, 1.6, 1.8	07.08 - 07.13	1030	1160	E90-65-019-01-22	A, 18, 20, 21, 78, 161			30	30					F11-65-019-01-VA	F11-65-011-01-HA	T
1.6 SIDI, 1.6 Turbo, 2.0 Turbo, 2.0 E85 Turbo, 2.0 CDTI, 2.0 Biturbo CDTI	07.08 - 07.13	1175	1160	E90-65-019-02-22	A, 18, 20, 21, 78, 161			30	30					F11-65-019-02-VA	F11-65-011-01-HA	T
1.4, 1.6, 1.8	07.13 -	1030	1160	E90-65-019-14-22	A, 18, 20, 21, 78, 161			30	30					F11-65-019-14-VA	F11-65-011-01-HA	T
1.6 SIDI, 1.6 Turbo, 2.0 Turbo, 2.0 E85 Turbo, 2.0 CDTI, 2.0 Biturbo CDTI	07.13 -	1175	1160	E90-65-019-15-22	A, 18, 20, 21, 78, 161			30	30					F11-65-019-15-VA	F11-65-011-01-HA	T

OPEL

Modell *Model*	Baujahr *Year*	Achslast Vorne kg *Front Axle Load kg*	Achslast Hinten kg *Rear Axle Load kg*	Artikel-Nr. *Part-No.*	Hinweise *Notes*	ab Nachtrag ...xx BE *from suppl. ...xx of type approval*	bis Nachtrag ...xx BE *to suppl. ...xx of type approval*	ca. Tieferl. Vorne mm *ca. Lowering Front mm*	ca. Tieferl. Hinten mm *ca. Lowering Rear mm*	Ø Vorne mm *Ø Front mm*	Ø Hinten mm *Ø Rear mm*	Verstellbarkeit Vorne *Adjustable Front*	Verstellbarkeit Hinten *Adjustable Rear*	Ersatzteilbez. Vorne *Spare Part Marking Front*	Ersatzteilbez. Hinten *Spare Part Marking Rear*	Gutachten *Homologation*
INSIGNIA Sports Tourer																
Pro-Kit (Performance Fahrwerksfedern | *Performance Springs*)																
1.4, 1.6, 1.8	07.08 - 08.13	1030	1265	E10-65-019-05-22	A, 18, 20			30	30					F11-65-019-01-VA	F11-65-019-05-HA	T
1.6 SIDI, 1.6 Turbo, 2.0 Biturbo CDTI, 2.0 CDTI, 2.0 E85 Turbo, 2.0 Turbo	07.08 - 08.13	1175	1265	E10-65-019-06-22	A, 18, 20			30	30					F11-65-019-02-VA	F11-65-019-05-HA	T
2.0 Turbo 4x4	07.08 - 08.13	1175	1355	E10-65-019-07-22	A, 18			30	30					F11-65-019-02-VA	F11-65-019-07-HA	T
2.0 Biturbo CDTI 4x4, 2.0 CDTI 4x4, 2.0 Turbo 4x4, 2.8 V6 Turbo 4x4	07.08 - 08.13	1240	1355	E10-65-019-08-22	A, 18			30	30					F11-65-019-04-VA	F11-65-019-07-HA	T
1.4, 1.6, 1.8	08.13 -	1030	1265	E10-65-019-16-22	A, 18, 20			30	30					F11-65-019-14-VA	F11-65-019-05-HA	T
1.6 SIDI, 1.6 Turbo, 2.0 Biturbo CDTI, 2.0 CDTI, 2.0 E85 Turbo, 2.0 Turbo	08.13 -	1175	1265	E10-65-019-17-22	A, 18, 20			30	30					F11-65-019-15-VA	F11-65-019-05-HA	T
2.0 Turbo 4x4	08.13 -	1175	1355	E10-65-019-18-22	A, 18			30	30					F11-65-019-15-VA	F11-65-019-07-HA	T
2.0 Biturbo CDTI 4x4, 2.0 CDTI 4x4, 2.0 Turbo 4x4, 2.8 V6 Turbo 4x4	08.13 -	1240	1355	E10-65-019-19-22	A, 18			30	30					F11-65-019-19-VA	F11-65-019-07-HA	T
Pro-Tronic (Elektronische Performance Fahrwerksmodule | *Electronic Performance Suspension Moduls*)																
Alle Motorisierungen / *all motorisation*	08.13 -			AM65-65-013-01-22	A, 175											
B12 Pro-Kit (Performance Komplettfahrwerke | *Performance Springs+Shocks*)																
1.4, 1.6, 1.8	07.08 - 08.13	1030	1265	E90-65-019-05-22	A, 18, 20, 21, 78, 161			30	30					F11-65-019-01-VA	F11-65-019-05-HA	T
1.6 SIDI, 1.6 Turbo, 2.0 Turbo, 2.0 E85 Turbo, 2.0 CDTI, 2.0 Biturbo CDTI	07.08 - 08.13	1175	1265	E90-65-019-06-22	A, 18, 20, 21, 78, 161			30	30					F11-65-019-02-VA	F11-65-019-05-HA	T
2.0 Turbo 4x4	09.11 - 08.13	1175	1355	E90-65-019-07-22	A, 18, 21, 78, 161			30	30					F11-65-019-02-VA	F11-65-019-07-HA	T
2.0 Turbo 4x4, 2.8 V6 Turbo 4x4, 2.0 CDTI 4x4, 2.0 Biturbo CDTI 4x4	09.11 - 08.13	1240	1265	E90-65-019-08-22	A, 18, 21, 78, 161			30	30					F11-65-019-04-VA	F11-65-019-07-HA	T
1.4, 1.6, 1.8	08.13 -	1030	1265	E90-65-019-16-22	A, 18, 20, 21, 78, 161			30	30					F11-65-019-14-VA	F11-65-019-05-HA	T
1.6 SIDI, 1.6 Turbo, 2.0 Turbo, 2.0 E85 Turbo, 2.0 CDTI, 2.0 Biturbo CDTI	08.13 -	1175	1265	E90-65-019-17-22	A, 18, 20, 21, 78, 161			30	30					F11-65-019-15-VA	F11-65-019-05-HA	T
2.0 Turbo 4x4	08.13 -	1175	1355	E90-65-019-18-22	A, 18, 21, 78, 161			30	30					F11-65-019-15-VA	F11-65-019-07-HA	T
2.0 Turbo 4x4, 2.8 V6 Turbo 4x4, 2.0 CDTI 4x4, 2.0 Biturbo CDTI 4x4	08.13 -	1240	1265	E90-65-019-19-22	A, 18, 21, 78, 161			30	30					F11-65-019-19-VA	F11-65-019-07-HA	T
INSIGNIA Stufenheck ***INSIGNIA Saloon***																
Pro-Kit (Performance Fahrwerksfedern | *Performance Springs*)																
1.4, 1.6, 1.8	07.08 - 07.13	1030	1160	E10-65-019-01-22	A, 18, 20			30	30					F11-65-019-01-VA	F11-65-011-01-HA	T
1.6 SIDI, 1.6 Turbo, 2.0 Turbo, 2.0 E85 Turbo, 2.0 CDTI, 2.0 Biturbo CDTI	07.08 - 07.13	1175	1160	E10-65-019-02-22	A, 18, 20			30	30					F11-65-019-02-VA	F11-65-011-01-HA	T
1.4, 1.6, 1.8	07.13 -	1030	1160	E10-65-019-14-22	A, 18, 20			30	30					F11-65-019-14-VA	F11-65-011-01-HA	T
1.6 SIDI, 1.6 Turbo, 2.0 Turbo, 2.0 E85 Turbo, 2.0 CDTI, 2.0 Biturbo CDTI	07.13 -	1175	1160	E10-65-019-15-22	A, 18, 20			30	30					F11-65-019-15-VA	F11-65-011-01-HA	T
Pro-Tronic (Elektronische Performance Fahrwerksmodule | *Electronic Performance Suspension Moduls*)																
Alle Motorisierungen / *all motorisation*	07.08 -			AM65-65-013-01-22	A, 175											
B12 Pro-Kit (Performance Komplettfahrwerke | *Performance Springs+Shocks*)																
1.4, 1.6, 1.8	07.08 - 07.13	1030	1160	E90-65-019-01-22	A, 18, 20, 21, 78, 161			30	30					F11-65-019-01-VA	F11-65-011-01-HA	T
1.6 SIDI, 1.6 Turbo, 2.0 Turbo, 2.0 E85 Turbo, 2.0 CDTI, 2.0 Biturbo CDTI	07.08 - 07.13	1175	1160	E90-65-019-02-22	A, 18, 20, 21, 78, 161			30	30					F11-65-019-02-VA	F11-65-011-01-HA	T
1.4, 1.6, 1.8	07.13 -	1030	1160	E90-65-019-14-22	A, 18, 20, 21, 78, 161			30	30					F11-65-019-14-VA	F11-65-011-01-HA	T
1.6 SIDI, 1.6 Turbo, 2.0 Turbo, 2.0 E85 Turbo, 2.0 CDTI, 2.0 Biturbo CDTI	07.13 -	1175	1160	E90-65-019-15-22	A, 18, 20, 21, 78, 161			30	30					F11-65-019-15-VA	F11-65-011-01-HA	T
KADETT E (39_, 49_)																
Pro-Kit (Performance Fahrwerksfedern | *Performance Springs*)																
1.2, 1.3 N, 1.3 S, 1.3 i KAT, 1.4 S, 1.4 i, 1.6, 1.6 S, 1.6 i, 1.6 i KAT, 1.8, 1.8 S, 1.8 i *1.2, 1.3 N, 1.3 S, 1.3 i CAT, 1.4 S, 1.4 i, 1.6, 1.6 S, 1.6 i, 1.6 i CAT, 1.8, 1.8 S, 1.8 i*	09.84 - 08.91	770	715	E6506-140	A, 9, 18, 20			35-40	35-40					F6521001	F6522102	T
KADETT E Caravan (35_, 36_, 45_, 46_) ***KADETT E Estate (35_, 36_, 45_, 46_)***																
Pro-Kit (Performance Fahrwerksfedern | *Performance Springs*)																
1.2, 1.3, 1.3 N, 1.3 S, 1.3 i KAT, 1.4 S, 1.4 i, 1.5 TD, 1.6, 1.6 D, 1.6 S, 1.6 i, 1.6 i KAT, 1.7 D, 1.8 E, 1.8 S, 1.8 i, 2.0 i, 2.0 i KAT *1.2, 1.3, 1.3 N, 1.3 S, 1.3 i CAT, 1.4 S, 1.4 i, 1.5 TD, 1.6, 1.6 D, 1.6 S, 1.6 i, 1.6 i CAT, 1.7 D, 1.8 E, 1.8 S, 1.8 i, 2.0 i, 2.0 i CAT*	09.84 - 08.91	770	830	E6511-140	A, 9, 18, 20			35	35					F6521001	F6511002	T
KADETT E CC (33_, 34_, 43_, 44_) ***KADETT E Hatchback (33_, 34_, 43_, 44_)***																
Pro-Kit (Performance Fahrwerksfedern | *Performance Springs*)																
1.2, 1.3, 1.3 N, 1.3 S, 1.3 i KAT, 1.4 S, 1.4 i, 1.6 S, 1.6 i, 1.6 i KAT, 1.8 E, 1.8 GSI, 1.8 S, 1.8 i *1.2, 1.3, 1.3 N, 1.3 S, 1.3 i CAT, 1.4 S, 1.4 i, 1.6 S, 1.6 i, 1.6 i CAT, 1.8 E, 1.8 GSI, 1.8 S, 1.8 i*	09.84 - 08.91	770	715	E6506-140	A, 9, 18, 20			35-40	35-40					F6521001	F6522102	T
KARL																
Pro-Kit (Performance Fahrwerksfedern | *Performance Springs*)																
1.0	01.15 -	740	710	E10-23-016-01-22	A, 18			30	30					F11-23-016-01-FA	F11-23-016-01-RA	T
MERIVA B																
Pro-Kit (Performance Fahrwerksfedern | *Performance Springs*)																
1.3 CDTI, 1.4	06.10 -	1060	1010	E10-65-021-01-22	A, 18, 20			20-25	20-25					F11-65-021-01-VA	F6542002	T
1.6 CDTi, 1.7 CDTi	06.10 -	1145	1010	E10-65-021-02-22	A, 18, 20			20-25	20-25					F11-65-014-02-VA	F6542002	T
B12 Pro-Kit (Performance Komplettfahrwerke | *Performance Springs+Shocks*)																
1.3 CDTI, 1.4	06.10 -	1060	1010	E90-65-021-01-22	A, 18, 20, 78, 161			20-25	20-25					F11-65-021-01-VA	F6542002	T
1.6 CDTi, 1.7 CDTi	06.10 -	1145	1010	E90-65-021-02-22	A, 18, 20, 78, 161			20-25	20-25					F11-65-014-02-VA	F6542002	T

OPEL

Modell *Model*	Baujahr *Year*	Achslast Vorne kg *Front Axle Load kg*	Achslast Hinten kg *Rear Axle Load kg*	Artikel-Nr. *Part-No.*	Hinweise *Notes*	ab Nachtrag ...xx BE *from suppl. ...xx of type approval*	bis Nachtrag ...xx BE *to suppl. ...xx of type approval*	ca. Tieferl. Vorne mm *ca. Lowering Front mm*	ca. Tieferl. Hinten mm *ca. Lowering Rear mm*	Ø Vorne mm *Ø Front mm*	Ø Hinten mm *Ø Rear mm*	Verstellbarkeit Vorne *Adjustable Front*	Verstellbarkeit Hinten *Adjustable Rear*	Ersatzteilbez. Vorne *Spare Part Marking Front*	Ersatzteilbez. Hinten *Spare Part Marking Rear*	Gutachten *Homologation*
MOKKA																
Pro-Kit (Performance Fahrwerksfedern | *Performance Springs*)																
1.4, 1.4 4x4, 1.6, 1.8, 1.8 4x4	06.12 -	1065	1165	E10-65-029-01-22	A, 18			25	25					F11-65-029-01-VA	F11-65-029-01-HA	T
1.6 CDTi, 1.6 CDTi 4x4, 1.7 CDTi, 1.7 CDTi 4x4	06.12 -	1065	1165	E10-65-029-02-22	A, 18			25	25					F11-65-029-02-VA	F11-65-029-01-HA	T
OMEGA B (25_, 26_, 27_)																
Pro-Kit (Performance Fahrwerksfedern | *Performance Springs*)																
2.0, 2.0 16V, 2.2 16V	03.94 - 07.03	990	1155	E6531-140	A, 18, 20, 68			30	30					F6531001	F2042002	T
2.0 DTI 16V, 2.2 DTI 16V, 2.5 DTI, 2.5 TD, 2.5 V6, 2.6 V6, 3.0 V6, 3.2 V6	03.94 - 07.03	1080	1155	E6532-140	A, 18, 20, 68			30	30					F6532001	F2042002	T
B12 Pro-Kit (Performance Komplettfahrwerke | *Performance Springs+Shocks*)																
2.0, 2.0 16V, 2.2 16V	03.94 - 07.03	990	1155	E90-65-026-01-22	A, 18, 20, 78, 68, 161			30	30					F6531001	F2042002	T
2.0 DTI 16V, 2.2 DTI 16V, 2.5 DTI, 2.5 TD, 2.5 V6, 2.6 V6, 3.0 V6, 3.2 V6	03.94 - 07.03	1080	1155	E90-65-026-02-22	A, 18, 20, 78, 68, 161			30	30					F6532001	F2042002	T
OMEGA B Caravan (21_, 22_, 23_) ***OMEGA B Estate (21_, 22_, 23_)***																
Pro-Kit (Performance Fahrwerksfedern | *Performance Springs*)																
2.0, 2.0 16V, 2.2 16V	03.94 - 07.03	990	1290	E6533-140	A, 18, 20, 68			30	30					F6531001	F6533002	T
2.0 DTI 16V, 2.2 DTI 16V, 2.5 DTI, 2.5 TD, 2.5 V6, 2.6 V6, 3.0 V6, 3.2 V6	03.94 - 07.03	1080	1290	E6534-140	A, 18, 20, 68			30	30					F6532001	F6533002	T
B12 Pro-Kit (Performance Komplettfahrwerke | *Performance Springs+Shocks*)																
2.0, 2.0 16V, 2.2 16V	03.94 - 07.03	990	1290	E90-65-026-03-22	A, 18, 20, 78, 68, 161			30	30					F6531001	F6533002	T
2.0 DTI 16V, 2.2 DTI 16V, 2.5 DTI, 2.5 TD, 2.5 V6, 2.6 V6, 3.0 V6, 3.2 V6	03.94 - 07.03	1080	1290	E90-65-026-04-22	A, 18, 20, 78, 68, 161			30	30					F6532001	F6533002	T
SIGNUM																
Pro-Kit (Performance Fahrwerksfedern | *Performance Springs*)																
1.8, 2.2 direct	05.03 -	1060	1215	E10-65-011-01-22	A, 18, 20			30	30					F11-65-007-01-VA	F11-65-011-01-HA	T
2.0 Turbo, 3.2 V6, 1.9 CDTI, 2.0 DTI, 2.2 DTI, 2.2 DTI 16V	05.03 -	1135	1215	E10-65-011-02-22	A, 18, 20			30	30					F11-65-007-02-VA	F11-65-011-01-HA	T
2.8, 2.8 V6 Turbo, 3.2 V6, 1.9 CDTI, 3.0 V6 CDTI	05.03 -	1230	1215	E10-65-011-03-22	A, 18, 20			30	30					F11-65-007-07-VA	F11-65-011-01-HA	T
B12 Pro-Kit (Performance Komplettfahrwerke | *Performance Springs+Shocks*)																
1.8, 2.2 direct	05.03 - 09.04	1060	1215	E90-65-011-02-22	A, 18, 20, 21, 78, 106, 161			30	30					F11-65-007-01-VA	F11-65-011-01-HA	T
1.8, 2.2 direct	10.04 -	1060	1215	E90-65-011-01-22	A, 18, 20, 21, 78, 138, 161			30	30					F11-65-007-01-VA	F11-65-011-01-HA	T
2.0 Turbo, 3.2 V6, 1.9 CDTI, 2.0 DTI, 2.2 DTI, 2.2 DTI 16V	05.03 - 09.04	1135	1215	E90-65-011-04-22	A, 18, 20, 21, 78, 106, 161			30	30					F11-65-007-02-VA	F11-65-011-01-HA	T
2.0 Turbo, 3.2 V6, 1.9 CDTI, 2.0 DTI, 2.2 DTI, 2.2 DTI 16V	10.04 -	1135	1215	E90-65-011-03-22	A, 18, 20, 21, 78, 138, 161			30	30					F11-65-007-02-VA	F11-65-011-01-HA	T
1.9 CDTI, 3.0 V6 CDTI	05.03 - 09.04	1230	1215	E90-65-011-06-22	A, 18, 20, 21, 78, 106, 161			30	30					F11-65-007-07-VA	F11-65-011-01-HA	T
2.8, 2.8 V6 Turbo, 3.2 V6, 1.9 CDTI, 3.0 V6 CDTI	10.04 -	1230	1215	E90-65-011-05-22	A, 18, 20, 21, 78, 138, 161			30	30					F11-65-007-07-VA	F11-65-011-01-HA	T
TIGRA TwinTop																
Pro-Kit (Performance Fahrwerksfedern | *Performance Springs*)																
1.4, 1.8	06.04 -	865	680	E10-65-005-01-22	A, 18, 20			25-30	25-30					F11-65-002-02-VA	F6528102	T
B12 Pro-Kit (Performance Komplettfahrwerke | *Performance Springs+Shocks*)																
1.4, 1.8	06.04 -	865	680	E90-65-005-02-22	A, 18, 20, 78, 89, 91, 161			25-30	25-30					F11-65-002-02-VA	F6528102	T
1.4, 1.8	06.04 -	865	680	E90-65-005-01-22	A, 18, 20, 78, 90, 92, 161			25-30	25-30					F11-65-002-02-VA	F6528102	T
VECTRA A (86_, 87_)																
Pro-Kit (Performance Fahrwerksfedern | *Performance Springs*)																
1.4 S, 1.6, 1.6 i, 1.7 D, 1.7 TD, 1.8 S, 1.8 i KAT, 2.0, 2.0 i, 2.0 i 16V, 2.0 i KAT *1.4 S, 1.6, 1.6 i, 1.7 D, 1.7 TD, 1.8 S, 1.8 i CAT, 2.0, 2.0 i, 2.0 i 16V, 2.0 i CAT*	09.88 - 11.95	915	830	E6522-140	A, 18, 20			30	30					F6517001	F6522102	T
2.5 V6	02.93 - 11.95	975	830	E6529-140	A, 18, 20			35	35					F6529001	F6522102	T
B12 Pro-Kit (Performance Komplettfahrwerke | *Performance Springs+Shocks*)																
1.4 S, 1.6, 1.6 i, 1.7 D, 1.7 TD, 1.8 S, 1.8 i KAT, 2.0, 2.0 i, 2.0 i 16V, 2.0 i KAT *1.4 S, 1.6, 1.6 i, 1.7 D, 1.7 TD, 1.8 S, 1.8 i CAT, 2.0, 2.0 i, 2.0 i 16V, 2.0 i CAT*	09.88 - 11.95	915	830	E90-65-024-01-22	A, 18, 20, 78, 161			30	30					F6517001	F6522102	T
2.5 V6	02.93 - 11.95	975	830	E90-65-024-02-22	A, 18, 20, 78, 161			35	35					F6529001	F6522102	T
VECTRA A CC (88_, 89_) ***VECTRA A Hatchback (88_, 89_)***																
Pro-Kit (Performance Fahrwerksfedern | *Performance Springs*)																
1.4 S, 1.6 S, 1.6 i, 1.6 i KAT, 1.7 D, 1.7 TD, 1.8 S, 1.8 i, 1.8 i KAT, 2.0, 2.0 i, 2.0 i 16V, 2.0 i 16V KAT, 2.0 i GT, 2.0 i KAT *1.4 S, 1.6 S, 1.6 i, 1.6 i CAT, 1.7 D, 1.7 TD, 1.8 S, 1.8 i, 1.8 i CAT, 2.0, 2.0 i, 2.0 i 16V, 2.0 i 16V CAT, 2.0 i CAT, 2.0 i GT*	04.88 - 11.95	915	830	E6522-140	A, 18, 20			30	30					F6517001	F6522102	T
2.5 V6	02.93 - 11.95	975	830	E6529-140	A, 18, 20			35	35					F6529001	F6522102	T
B12 Pro-Kit (Performance Komplettfahrwerke | *Performance Springs+Shocks*)																
1.4 S, 1.6 S, 1.6 i, 1.6 i KAT, 1.7 D, 1.7 TD, 1.8 S, 1.8 i, 1.8 i KAT, 2.0, 2.0 i, 2.0 i 16V, 2.0 i 16V KAT, 2.0 i GT, 2.0 i KAT *1.4 S, 1.6 S, 1.6 i, 1.6 i CAT, 1.7 D, 1.7 TD, 1.8 S, 1.8 i, 1.8 i CAT, 2.0, 2.0 i, 2.0 i 16V, 2.0 i 16V CAT, 2.0 i CAT, 2.0 i GT*	04.88 - 11.95	915	830	E90-65-024-01-22	A, 18, 20, 78, 161			30	30					F6517001	F6522102	T
2.5 V6	02.93 - 11.95	975	830	E90-65-024-02-22	A, 18, 20, 78, 161			35	35					F6529001	F6522102	T
VECTRA B (36_)																
Pro-Kit (Performance Fahrwerksfedern | *Performance Springs*)																
1.6 GL, 1.6 i, 1.6 i 16V	09.95 - 04.02	870	945	E6545-140	A, 18, 20, 68			30	30					F6518001	F6537002	T
1.6 i, 1.6 i 16V, 1.6 GL, 1.8 i 16V, 2.0 i 16V, 2.0 i, 2.2 i 16V, 2.5 i V6, 1.7 TD	09.95 - 04.02	975	945	E6537-140	A, 18, 20, 68			35	30					F6537001	F6537002	T
i 500 2.5	05.98 - 09.00	975	945	E6537-140	A, 18, 20, 68			35	30					F6537001	F6537002	T
2.0 i 16V, 2.5 i V6, 2.6 i V6, 2.0 DI 16V, 2.0 DTI 16V, 2.2 DTI 16V	09.95 - 04.02	1055	945	E6538-140	A, 18, 20, 68			35	30					F6529001	F6537002	T

OPEL

Modell *Model*	Baujahr *Year*	Achslast Vorne kg *Front Axle Load kg*	Achslast Hinten kg *Rear Axle Load kg*	Artikel-Nr. *Part-No.*	Hinweise *Notes*	ab Nachtrag ...xx BE *from suppl. ...xx of type approval*	bis Nachtrag ...xx BE *to suppl. ...xx of type approval*	ca. Tieferl. Vorne mm *ca. Lowering Front mm*	ca. Tieferl. Hinten mm *ca. Lowering Rear mm*	Ø Vorne mm *Ø Front mm*	Ø Hinten mm *Ø Rear mm*	Verstellbarkeit Vorne *Adjustable Front*	Verstellbarkeit Hinten *Adjustable Rear*	Ersatzteilbez. Vorne *Spare Part Marking Front*	Ersatzteilbez. Hinten *Spare Part Marking Rear*	Gutachten *Homologation*
VECTRA B (36_)																
B12 Pro-Kit (Performance Komplettfahrwerke | *Performance Springs+Shocks*)																
1.6 GL, 1.6 i, 1.6 i 16V	09.95 - 04.02	870	945	E90-65-025-05-22	A, 18, 20, 68, 78, 161			30	30					F6537001	F6537002	T
1.6 GL, 1.6 i, 1.6 i 16V, 1.7 TD, 1.8 i 16V, 2.0 i, 2.0 i 16V, 2.2 i 16V, 2.5 i V6	09.95 - 04.02	975	945	E90-65-025-01-22	A, 18, 20, 68, 78, 161			35	35					F6518001	F6537002	T
2.0 DI 16V, 2.0 DTI 16V, 2.0 i, 2.0 i 16V, 2.2 DTI 16V, 2.5 i V6, 2.6 i V6	10.95 - 04.02	1055	945	E90-65-025-02-22	A, 18, 20, 68, 78, 161			35	30					F6529001	F6537002	T
VECTRA B CC (38_) ***VECTRA B Hatchback (38_)***																
Pro-Kit (Performance Fahrwerksfedern | *Performance Springs*)																
1.6 i, 1.6 i 16V	10.95 - 07.03	870	945	E6545-140	A, 18, 20, 68			30	30					F6518001	F6537002	T
1.6 i, 1.6 i 16V, 1.7 TD, 2.0 i, 2.0 i 16V, 2.2 i 16V	10.95 - 07.03	975	945	E6537-140	A, 18, 20, 68			35	30					F6537001	F6537002	T
1.8 i 16V, 2.5, 2.5 i V6	10.95 - 07.03	975	945	E6537-140	A, 18, 20, 68			35	30					F6537001	F6537002	T
2.0 i, 2.0 i 16V	10.95 - 02.02	1055	945	E6538-140	A, 18, 20, 68			35	30					F6529001	F6537002	T
2.0 DI 16V, 2.0 DTI 16V, 2.2 DTI 16V, 2.5, 2.5 i V6, 2.6 i V6	10.95 - 07.03	1055	945	E6538-140	A, 18, 20, 68			35	35					F6529001	F6537002	T
B12 Pro-Kit (Performance Komplettfahrwerke | *Performance Springs+Shocks*)																
1.6 i, 1.6 i 16V	10.95 - 07.03	870	945	E90-65-025-05-22	A, 18, 20, 68, 78, 161			30	30					F6537001	F6537002	T
1.6 i, 1.6 i 16V, 1.7 TD, 1.8 i 16V, 2.0 i, 2.0 i 16V, 2.2 i 16V, 2.5 i V6	10.95 - 07.03	975	945	E90-65-025-01-22	A, 18, 20, 68, 78, 161			35	30					F6518001	F6537002	T
2.0 DI 16V, 2.0 DTI 16V, 2.0 i, 2.0 i 16V, 2.2 DTI 16V, 2.5 i V6, 2.6 i V6	10.95 - 07.03	1055	945	E90-65-025-02-22	A, 18, 20, 68, 78, 161			35	35					F6529001	F6537002	T
VECTRA C																
Pro-Kit (Performance Fahrwerksfedern | *Performance Springs*)																
1.8, 1.8 16V, 1.9 CDTI, 2.0 16V Turbo, 2.2 16V, 2.2 DTI 16V, 2.2 direct, 3.2 V6	04.02 -	1060	1035	E10-65-007-01-22	A, 18, 20			30	30					F11-65-007-01-VA	F11-65-007-01-HA	T
1.9 CDTI, 2.0 16V Turbo, 2.0 DTI 16V, 2.2 DTI 16V, 3.2 V6	04.02 -	1135	1035	E10-65-007-02-22	A, 18, 20			30	30					F11-65-007-02-VA	F11-65-007-01-HA	T
1.6, 1.6 16V, 1.8, 1.8 16V	04.02 -	965	1035	E10-65-007-05-22	A, 18, 20			30	30					F11-65-007-05-VA	F11-65-007-01-HA	T
3.0 CDTI	06.03 -	1230	1035	E10-65-007-07-22	A, 18, 20			30	30					F11-65-007-07-VA	F11-65-007-01-HA	T
B12 Pro-Kit (Performance Komplettfahrwerke | *Performance Springs+Shocks*)																
1.6 16V, 1.8, 1.8 16V, 1.9 CDTI, 2.0 16V Turbo, 2.0 DTI 16V, 2.2 16V, 2.2 DTI 16V, 2.2 direct, 3.2 V6	04.02 - 09.04	1060	1035	E90-65-007-01-22	A, 18, 20, 78, 101, 107, 161			30	30					F11-65-007-01-VA	F11-65-007-01-HA	T
1.9 CDTI, 2.0 16V Turbo, 2.0 DTI 16V, 2.2 DTI 16V, 3.2 V6	04.02 - 09.04	1135	1035	E90-65-007-02-22	A, 18, 20, 78, 101, 107, 161			30	30					F11-65-007-02-VA	F11-65-007-01-HA	T
1.8, 1.8 16V, 1.9 CDTI, 2.0 16V Turbo, 2.0 DTI 16V, 2.2 16V, 2.2 DTI 16V, 2.2 direct, 3.2 V6	10.04 -	1060	1035	E90-65-007-03-22	A, 18, 20, 78, 101, 138, 161			30	30					F11-65-007-01-VA	F11-65-007-01-HA	T
1.9 CDTI, 2.0 16V Turbo, 2.0 DTI 16V, 2.2 DTI 16V, 3.2 V6	10.04 -	1135	1035	E90-65-007-04-22	A, 18, 20, 78, 101, 138, 161			30	30					F11-65-007-02-VA	F11-65-007-01-HA	T
1.8, 1.8 16V	04.02 - 09.04	965	1035	E90-65-007-05-22	A, 18, 20, 78, 101, 107, 161			30	30					F11-65-007-05-VA	F11-65-007-01-HA	T
1.6, 1.6 16V, 1.8, 1.8 16V	10.04 -	965	1035	E90-65-007-06-22	A, 18, 20, 78, 101, 138, 161			30	30					F11-65-007-05-VA	F11-65-007-01-HA	T
3.0 CDTI	06.03 - 09.04	1230	1035	E90-65-007-07-22	A, 18, 20, 78, 101, 107, 161			30	30					F11-65-007-07-VA	F11-65-007-01-HA	T
3.0 CDTI	10.04 -	1230	1035	E90-65-007-08-22	A, 18, 20, 78, 101, 138, 161			30	30					F11-65-007-07-VA	F11-65-007-01-HA	T
VECTRA C Caravan ***VECTRA C Estate***																
Pro-Kit (Performance Fahrwerksfedern | *Performance Springs*)																
1.6, 1.6 16V, 1.8, 1.9 CDTI, 2.0 Turbo, 2.2 DTI, 2.2 direct, 3.2 V6	10.03 -	1060	1215	E10-65-011-01-22	A, 18, 20			30	30					F11-65-007-01-VA	F11-65-011-01-HA	T
1.9 CDTI, 2.0 DTI, 2.0 Turbo, 2.2 DTI, 3.2 V6	10.03 -	1135	1215	E10-65-011-02-22	A, 18, 20			30	30					F11-65-007-02-VA	F11-65-011-01-HA	T
3.0 V6 CDTI	10.03 -	1230	1215	E10-65-011-03-22	A, 18, 20			30	30					F11-65-007-07-VA	F11-65-011-01-HA	T
B12 Pro-Kit (Performance Komplettfahrwerke | *Performance Springs+Shocks*)																
1.6, 1.6 16V, 1.8, 1.9 CDTI, 2.0 DTI, 2.0 Turbo, 2.2 DTI, 2.2 direct, 3.2 V6	10.04 -	1060	1215	E90-65-011-01-22	A, 18, 20, 78, 101, 138, 161			30	30					F11-65-007-01-VA	F11-65-011-01-HA	T
1.6 16V, 1.8, 1.9 CDTI, 2.0 Turbo, 2.2 direct, 3.2 V6	10.03 - 09.04	1060	1215	E90-65-011-02-22	A, 18, 20, 78, 101, 106, 161			30	30					F11-65-007-01-VA	F11-65-011-01-HA	T
1.9 CDTI, 2.0 DTI, 2.0 Turbo, 2.2 DTI, 3.2 V6	10.03 - 09.04	1135	1215	E90-65-011-04-22	A, 18, 20, 78, 101, 106, 161			30	30					F11-65-007-02-VA	F11-65-011-01-HA	T
1.9 CDTI, 2.0 DTI, 2.0 Turbo, 2.2 DTI, 3.2 V6	10.04 -	1135	1215	E90-65-011-03-22	A, 18, 20, 78, 101, 138, 161			30	30					F11-65-007-02-VA	F11-65-011-01-HA	T
3.0 V6 CDTI	10.03 - 09.04	1230	1215	E90-65-011-06-22	A, 18, 20, 78, 101, 106, 161			30	30					F11-65-007-07-VA	F11-65-007-01-HA	T
3.0 V6 CDTI	10.04 -	1230	1215	E90-65-011-05-22	A, 18, 20, 78, 101, 138, 161			30	30					F11-65-007-07-VA	F11-65-007-01-HA	T
VECTRA C GTS																
Pro-Kit (Performance Fahrwerksfedern | *Performance Springs*)																
1.6, 1.8, 1.8 16V	08.02 -	965	1035	E10-65-007-05-22	A, 18, 20			15	15					F11-65-007-05-VA	F11-65-007-01-HA	T
1.8, 1.8 16V, 1.9 CDTI, 2.0 16V Turbo, 2.2 16V, 2.2 DTI 16V, 2.2 direct, 3.2 V6	08.02 -	1060	1035	E10-65-007-01-22	A, 18, 20			15	15					F11-65-007-01-VA	F11-65-007-01-HA	T
1.9 CDTI, 2.0 16V Turbo, 2.0 DTI 16V, 2.2 DTI 16V, 3.2 V6	08.02 -	1135	1035	E10-65-007-02-22	A, 18, 20			15	15					F11-65-007-02-VA	F11-65-007-01-HA	T
3.0 CDTI	06.03 -	1230	1035	E10-65-007-07-22	A, 18, 20			15	15					F11-65-007-07-VA	F11-65-007-01-HA	T
B12 Pro-Kit (Performance Komplettfahrwerke | *Performance Springs+Shocks*)																
1.8 16V, 1.9 CDTI, 2.0 16V Turbo, 2.2 16V, 2.2 DTI 16V, 2.2 direct, 3.2 V6	08.02 - 09.04	1060	1035	E90-65-007-01-22	A, 18, 20, 78, 101, 106, 161			15	15					F11-65-007-01-VA	F11-65-007-01-HA	T
1.9 CDTI, 2.0 16V Turbo, 2.0 DTI 16V, 2.2 DTI 16V, 3.2 V6	08.02 - 09.04	1135	1035	E90-65-007-02-22	A, 18, 20, 78, 101, 106, 161			15	15					F11-65-007-02-VA	F11-65-007-01-HA	T

OPEL

Modell *Model*	Baujahr *Year*	Achslast Vorne kg *Front Axle Load kg*	Achslast Hinten kg *Rear Axle Load kg*	Artikel-Nr. *Part-No.*	Hinweise *Notes*	ab Nachtrag ...xx BE *from suppl. ...xx of type approval*	bis Nachtrag ...xx BE *to suppl. ...xx of type approval*	ca. Tieferl. Vorne mm *ca. Lowering Front mm*	ca. Tieferl. Hinten mm *ca. Lowering Rear mm*	Ø Vorne mm *Ø Front mm*	Ø Hinten mm *Ø Rear mm*	Verstellbarkeit Vorne *Adjustable Front*	Verstellbarkeit Hinten *Adjustable Rear*	Ersatzteilbez. Vorne *Spare Part Marking Front*	Ersatzteilbez. Hinten *Spare Part Marking Rear*	Gutachten *Homologation*
VECTRA C GTS																
B12 Pro-Kit (Performance Komplettfahrwerke | *Performance Springs+Shocks*)																
1.8, 1.8 16V, 1.9 CDTI, 2.0 16V Turbo, 2.2 16V, 2.2 DTI 16V, 2.2 direct, 3.2 V6	10.04 -	1060	1035	E90-65-007-03-22	A, 18, 20, 78, 101, 138, 161			15	15					F11-65-007-01-VA	F11-65-007-01-HA	T
1.9 CDTI, 2.0 16V Turbo, 2.0 DTI 16V, 2.2 DTI 16V, 3.0 CDTI, 3.2 V6	10.04 -	1230	1035	E90-65-007-04-22	A, 18, 20, 78, 101, 138, 161			15	15					F11-65-007-02-VA	F11-65-007-01-HA	T
1.8 16V	08.02 - 09.04	965	1035	E90-65-007-05-22	A, 18, 20, 78, 101, 106, 161			15	15					F11-65-007-05-VA	F11-65-007-01-HA	T
1.6, 1.8, 1.8 16V	10.04 -	965	1035	E90-65-007-06-22	A, 18, 20, 78, 101, 138, 161			15	15					F11-65-007-05-VA	F11-65-007-01-HA	T
3.0 CDTI	06.03 - 09.04	1230	1035	E90-65-007-07-22	A, 18, 20, 78, 101, 106, 161			15	15					F11-65-007-07-VA	F11-65-007-01-HA	T
ZAFIRA A (F75_)																
Pro-Kit (Performance Fahrwerksfedern | *Performance Springs*)																
1.6, 1.6 16V, 1.6 CNG, 1.8, 1.8 16V, 2.2 16V, 2.0 DI 16V, 2.0 DTI 16V, 2.2 DTI 16V	04.99 - 06.05	1075	1130	E6549-140	A, 18, 20			30	30					F6537001	F6549002	T
ZAFIRA B (A05)																
Pro-Kit (Performance Fahrwerksfedern | *Performance Springs*)																
1.6, 1.8	07.05 -	1035	1250	E10-65-014-01-22	A, 18, 20			30	30-35					F11-65-007-01-VA	F6549002	T
1.7 CDTI, 1.9 CDTI, 2.0, 2.2	07.05 -	1155	1250	E10-65-014-02-22	A, 18, 20			30	30-35					F11-65-014-02-VA	F6549002	T
Pro-Tronic (Elektronische Performance Fahrwerksmodule | *Electronic Performance Suspension Moduls*)																
Alle Motorisierungen / *all motorisation*	07.05 -			AM65-65-013-01-22	A, 175											
B12 Pro-Kit (Performance Komplettfahrwerke | *Performance Springs+Shocks*)																
1.6, 1.8	07.05 -	1035	1250	E90-65-014-01-22	A, 18, 20, 21, 78, 101, 161			30	30-35					F11-65-007-01-VA	F6549002	T
1.7 CDTI, 1.9 CDTI, 2.0, 2.2	07.05 -	1155	1250	E90-65-014-02-22	A, 18, 20, 21, 78, 101, 161			30	30-35					F11-65-014-02-VA	F6549002	T
ZAFIRA B Van																
Pro-Kit (Performance Fahrwerksfedern | *Performance Springs*)																
1.8	07.05 -	1035	1250	E10-65-014-01-22	A, 18, 20			30	30-35					F11-65-007-01-VA	F6549002	T
1.7 CDTI	01.08 -	1155	1250	E10-65-014-02-22	A, 18, 20			30	30-35					F11-65-014-02-VA	F6549002	T
Pro-Tronic (Elektronische Performance Fahrwerksmodule | *Electronic Performance Suspension Moduls*)																
Alle Motorisierungen / *all motorisation*	07.05 -			AM65-65-013-01-22	A, 175											
B12 Pro-Kit (Performance Komplettfahrwerke | *Performance Springs+Shocks*)																
1.8	07.05 -	1035	1250	E90-65-014-01-22	A, 18, 20, 21, 78, 101, 161			30	30-35					F11-65-007-01-VA	F6549002	T
1.7 CDTI	01.08 -	1155	1250	E90-65-014-02-22	A, 18, 20, 21, 78, 101, 161			30	30-35					F11-65-014-02-VA	F6549002	T
ZAFIRA TOURER C (P12)																
Pro-Kit (Performance Fahrwerksfedern | *Performance Springs*)																
1.4, 1.6 SIDI, 1.8	10.11 -	1130	1251	E10-65-028-03-22	A, 18, 20, 66			25	20					F11-65-028-01-VA	F11-65-011-01-HA	T
1.4, 1.6 SIDI, 1.8	10.11 -	1130	1251	E10-65-028-01-22	A, 18, 20, 67			25	20					F11-65-028-01-VA	F11-65-011-01-HA	T
1.6 CDTI, 2.0 BiTurbo CDTI, 2.0 CDTi	10.11 -	1250	1251	E10-65-028-04-22	A, 18, 20, 66			25	20					F11-65-028-02-VA	F11-65-011-01-HA	T
1.6 CDTI, 2.0 BiTurbo CDTI, 2.0 CDTi	10.11 -	1250	1251	E10-65-028-02-22	A, 18, 20, 67			25	20					F11-65-028-02-VA	F11-65-011-01-HA	T
B12 Pro-Kit (Performance Komplettfahrwerke | *Performance Springs+Shocks*)																
1.4, 1.6 SIDI, 1.8	10.11 -	1130	1251	E90-65-028-01-22	A, 18, 20, 67, 78, 161			25	20					F11-65-028-01-VA	F11-65-011-01-HA	T
1.4, 1.6 SIDI, 1.8	10.11 -	1130	1251	E90-65-028-03-22	A, 18, 20, 66, 78, 161			25	20					F11-65-028-01-VA	F11-65-011-01-HA	T
1.6 CDTI, 2.0 BiTurbo CDTI, 2.0 CDTi	10.11 -	1250	1251	E90-65-028-04-22	A, 18, 20, 66, 78 161			25	20					F11-65-028-02-VA	F11-65-011-01-HA	T
1.6 CDTI, 2.0 BiTurbo CDTI, 2.0 CDTi	10.11 -	1250	1251	E90-65-028-02-22	A, 18, 20, 67, 78, 161			25	20					F11-65-028-02-VA	F11-65-011-01-HA	T

PEUGEOT

106 I (1A, 1C)																
Pro-Kit (Performance Fahrwerksfedern | *Performance Springs*)																
1.1, 1.3, 1.4, 1.6	08.91 - 04.96	640	620	E7001-120	A, 18, 20			25-35	30					F7001001	Drehstabverstellung *torsion bar*	T
1.0, 1.4, 1.4 D, 1.5 D	08.91 - 04.96	650	640	E7003-120	A, 18, 20			30-40	30					F7003001	Drehstabverstellung *torsion bar*	T
Sportline (Performance Fahrwerksfedern Sport | *Sport Performance Springs*)																
1.0, 1.1, 1.3, 1.4, 1.4 D, 1.5 D, 1.6	08.91 - 04.96	785	640	E20-70-001-01-20	A, 20			45-50	30					F21-70-002-01-VA	Drehstabverstellung *torsion bar*	T
B12 Pro-Kit (Performance Komplettfahrwerke | *Performance Springs+Shocks*)																
1.1, 1.3, 1.4, 1.6	08.91 - 04.96	640	620	E90-70-001-01-20	A, 18, 20, 78, 161			25-35	30					F7001001	BI-34-030592	T
1.0, 1.4, 1.4 D, 1.5 D	08.91 - 04.96	650	640	E90-70-001-02-20	A, 18, 20, 78, 161			30-40	30					F7003001	BI-34-030592	T
B12 Sportline (Performance Komplettfahrwerke Sport | *Sport Performance Springs+Shocks*)																
1.0, 1.1, 1.3, 1.4, 1.4 D, 1.5 D, 1.6	08.91 - 04.96	785	640	E95-70-001-01-20	A, 20, 78, 161			45-50	30					F21-70-002-01-VA	BI-34-030592	T
106 II (1)																
Pro-Kit (Performance Fahrwerksfedern | *Performance Springs*)																
1.0 i, 1.1 i, 1.4 i, 1.5 D, 1.6 S16, 1.6 i	05.96 -	785	640	E7016-120	A, 18, 20			20	20					F2204001	Drehstabverstellung *torsion bar*	T
Sportline (Performance Fahrwerksfedern Sport | *Sport Performance Springs*)																
1.0 i, 1.1 i, 1.4 i, 1.5 D, 1.6 S16, 1.6 i	05.96 -	785	640	E20-70-001-01-20	A, 20			45-50	30					F21-70-002-01-VA	Drehstabverstellung *torsion bar*	T
B12 Pro-Kit (Performance Komplettfahrwerke | *Performance Springs+Shocks*)																
1.0 i, 1.1 i, 1.4 i, 1.5 D, 1.6 S16, 1.6 i	05.96 -	785	640	E90-70-001-02-20	A, 18, 20, 78, 161			20	20					F7003001	BI-34-030592	T
B12 Sportline (Performance Komplettfahrwerke Sport | *Sport Performance Springs+Shocks*)																
1.0 i, 1.1 i, 1.4 i, 1.5 D, 1.6 S16, 1.6 i	05.96 -	785	640	E95-70-001-01-20	A, 20, 78, 161			45-50	30					F21-70-002-01-VA	BI-34-030592	T
107																
Pro-Kit (Performance Fahrwerksfedern | *Performance Springs*)																
1.0, 1.4 HDi	06.05 -	695	695	E10-70-008-01-22	A, 18, 20			30-35	25-30					F11-70-008-01-VA	F11-70-008-01-HA	T
B12 Pro-Kit (Performance Komplettfahrwerke | *Performance Springs+Shocks*)																
1.0, 1.4 HDi	06.05 -	695	695	E90-70-008-01-22	A, 18, 20, 78, 161			30-35	25-30					F11-70-008-01-VA	F11-70-008-01-HA	T

PEUGEOT

PEUGEOT

Modell *Model*	Baujahr *Year*	Achslast Vorne kg *Front Axle Load kg*	Achslast Hinten kg *Rear Axle Load kg*	Artikel-Nr. *Part-No.*	Hinweise *Notes*	ab Nachtrag ...xx BE *from suppl. ...xx of type approval*	bis Nachtrag ...xx BE *to suppl. ...xx of type approval*	ca. Tieferl. Vorne mm *ca. Lowering Front mm*	ca. Tieferl. Hinten mm *ca. Lowering Rear mm*	Ø Vorne mm *Ø Front mm*	Ø Hinten mm *Ø Rear mm*	Verstellbarkeit Vorne *Adjustable Front*	Verstellbarkeit Hinten *Adjustable Rear*	Ersatzteilbez. Vorne *Spare Part Marking Front*	Ersatzteilbez. Hinten *Spare Part Marking Rear*	Gutachten *Homologation*
108																
Pro-Kit (Performance Fahrwerksfedern | *Performance Springs*)																
1.0 VTi, 1.2	05.14 -	695	695	E10-70-008-01-22	A, 18, 20			25	35					F11-70-008-01-VA	F11-70-008-01-HA	T
205 I (741A/C)																
Pro-Kit (Performance Fahrwerksfedern | *Performance Springs*)																
1.6, 1.6 GTI, 1.7 Diesel, 1.9 GTI	02.83 - 10.87	640	620	E7001-120	A, 18, 20			25-35	30					F7001001	Drehstabverstellung *torsion bar*	T
1.0, 1.1, 1.3, 1.4, 1.5, 1.6	02.83 - 10.87	650	640	E7003-120	A, 18, 20			30-40	30					F7003001	Drehstabverstellung *torsion bar*	T
205 I Cabriolet (741B, 20D) ***205 I Convertible (741B, 20D)***																
Pro-Kit (Performance Fahrwerksfedern | *Performance Springs*)																
1.6, 1.6 CJ, 1.6 CTI, 1.9, 1.9 CTI, 1.9 CTi	04.86 - 12.94	640	620	E7001-120	A, 18, 20			25-35	30					F7001001	Drehstabverstellung *torsion bar*	T
1.1 CJ, 1.4, 1.4 CJ, 1.4 CJ KAT, 1.4 CT, 1.6, 1.6 CJ, 1.6 CTI *1.1 CJ, 1.4, 1.4 CJ, 1.4 CJ CAT, 1.4 CT, 1.6, 1.6 CJ, 1.6 CTI*	04.86 - 12.94	650	640	E7003-120	A, 18, 20			30-40	30					F7003001	Drehstabverstellung *torsion bar*	T
206 CC (2D)																
Pro-Kit (Performance Fahrwerksfedern | *Performance Springs*)																
1.6 16V, 2.0 S16	09.00 -	890	780	E7025-120	A, 18, 20			30	25					F7025001	Drehstabverstellung *torsion bar*	T
Sportline (Performance Fahrwerksfedern Sport | *Sport Performance Springs*)																
1.6 16V, 2.0 S16	09.00 -	890	780	E20-70-002-01-20	A, 20			45-50	30					F21-70-002-01-VA	Drehstabverstellung *torsion bar*	T
B12 Pro-Kit (Performance Komplettfahrwerke | *Performance Springs+Shocks*)																
1.6 16V, 2.0 S16	09.00 -	890	780	E90-70-002-04-20	A, 18, 20, 78, 161			30	25					F7025001	BI-35-050162	T
B12 Sportline (Performance Komplettfahrwerke Sport | *Sport Performance Springs+Shocks*)																
1.6 16V, 2.0 S16	09.00 -	890	780	E95-70-002-01-20	A, 20, 78, 161			45-50	30					F21-70-002-01-VA	BI-35-050162	T
Pro-Street-S (Gewindefahrwerke - höhenverstellbar | *Coil-Overs-Adjustable Ride Hight*)																
1.6 16V, 2.0 S16	09.00 -	890	780	PSS65-70-002-01-22	A, 24, 25, 38, 45, 160			35-65	35-65							T
206 Schrägheck (2A/C) ***206 Hatchback (2A/C)***																
Pro-Kit (Performance Fahrwerksfedern | *Performance Springs*)																
2.0 RC	07.03 -	850	780	E10-70-002-07-20	A, 18, 20			20-25	20					F11-70-002-07-VA	Drehstabverstellung *torsion bar*	T
1.0, 1.1, 1.1 i, 1.4 16V, 1.4 i	08.98 -	890	730	E7023-120	A, 18, 20			30	30					F7003001	Drehstabverstellung *torsion bar*	T
1.6 16V, 1.6 i	09.98 -	890	730	E7024-120	A, 18, 20			30	30					F2204001	Drehstabverstellung *torsion bar*	T
1.6 HDi 110, 1.9 D, 2.0 HDI 90	09.98 -	890	730	E10-70-002-03-20	A, 18, 20			30	30					F7010001	Drehstabverstellung *torsion bar*	T
1.4 HDi, 1.4 HDi eco 70, 2.0 S16	04.99 -	890	780	E7025-120	A, 18, 20			25	25					F7025001	Drehstabverstellung *torsion bar*	T
Sportline (Performance Fahrwerksfedern Sport | *Sport Performance Springs*)																
1.0, 1.1, 1.1 i, 1.4 16V, 1.4 HDi, 1.4 HDi eco 70, 1.4 i, 1.6 16V, 1.6 HDi 110, 1.6 i, 1.9 D, 2.0 HDI 90, 2.0 RC, 2.0 S16	08.98 -	890	780	E20-70-002-01-20	A, 20			45-50	30					F21-70-002-01-VA	Drehstabverstellung *torsion bar*	T
B12 Pro-Kit (Performance Komplettfahrwerke | *Performance Springs+Shocks*)																
1.6 16V, 1.6 i	09.98 -	890	730	E90-70-002-02-20	A, 18, 20, 78, 161			30	30					F2204001	BI-35-050162	T
1.4 HDi, 1.4 HDi eco 70, 2.0 S16	04.99 -	890	780	E90-70-002-04-20	A, 18, 20, 78, 161			25	25					F7025001	BI-35-050162	T
2.0 RC	07.03 -	850	780	E90-70-002-05-20	A, 18, 20, 78, 161			20-25	20					F11-70-002-07-VA	BI-35-050162	T
1.1, 1.1 i, 1.4 16V, 1.4 i	08.98 -	890	730	E90-70-002-01-20	A, 18, 20, 78, 161			30	30					F7003001	BI-35-050162	T
1.6 HDi 110, 1.9 D, 2.0 HDI 90	09.98 -	890	730	E90-70-002-03-20	A, 18, 20, 78, 161			30	30					F7010001	BI-35-050162	T
B12 Sportline (Performance Komplettfahrwerke Sport | *Sport Performance Springs+Shocks*)																
1.1, 1.1 i, 1.4 16V, 1.4 HDi, 1.4 HDi eco 70, 1.4 i, 1.6 16V, 1.6 i, 1.9 D, 2.0 HDI 90, 2.0 RC, 2.0 S16	08.98 -	890	780	E95-70-002-01-20	A, 20, 78, 161			45-50	30					F21-70-002-01-VA	BI-35-050162	T
Pro-Street-S (Gewindefahrwerke - höhenverstellbar | *Coil-Overs-Adjustable Ride Hight*)																
1.0, 1.1, 1.1 i, 1.4 16V, 1.4 HDi, 1.4 HDi eco 70, 1.4 i, 1.6 16V, 1.6 i, 1.9 D, 2.0 HDI 90, 2.0 RC, 2.0 S16	08.98 -	890	780	PSS65-70-002-01-22	A, 24, 25, 38, 45, 160			35-65	35-65							T
206 Stufenheck ***206 Saloon***																
Pro-Kit (Performance Fahrwerksfedern | *Performance Springs*)																
1.4	03.07 -	890	730	E7023-120	A, 18, 20			30	30					F7003001	Drehstabverstellung *torsion bar*	T
1.6 16V	03.07 -	890	730	E7024-120	A, 18, 20			30	30					F2204001	Drehstabverstellung *torsion bar*	T
1.4 HDi eco 70	09.08 -	890	780	E7025-120	A, 18, 20			25	25					F7025001	Drehstabverstellung *torsion bar*	T
Sportline (Performance Fahrwerksfedern Sport | *Sport Performance Springs*)																
1.4 HDi eco 70, 1.6 16V	03.07 -	890	780	E20-70-002-01-20	A, 20			45-50	30					F21-70-002-01-VA	Drehstabverstellung *torsion bar*	T
B12 Pro-Kit (Performance Komplettfahrwerke | *Performance Springs+Shocks*)																
1.4	03.07 -	890	730	E90-70-002-01-20	A, 18, 20, 78, 161			30	30					F7003001	BI-35-050162	T
1.6 16V	03.07 -	890	730	E90-70-002-02-20	A, 18, 20, 78, 161			30	30					F2204001	BI-35-050162	T
Pro-Street-S (Gewindefahrwerke - höhenverstellbar | *Coil-Overs-Adjustable Ride Hight*)																
1.4 HDi eco 70, 1.6 16V	03.07 -	890	780	PSS65-70-002-01-22	A, 24, 25, 38, 45, 160			35-65	35-65							T
206 SW (2E/K)																
Pro-Kit (Performance Fahrwerksfedern | *Performance Springs*)																
1.1, 1.4, 1.4 16V	07.02 -	890	730	E7023-120	A, 18, 20			30	30					F7003001	Drehstabverstellung *torsion bar*	T
1.6 16V	07.02 -	890	730	E7024-120	A, 18, 20			30	30					F2204001	Drehstabverstellung *torsion bar*	T
1.6 HDi 110, 2.0 HDi	07.02 -	890	730	E10-70-002-03-20	A, 18, 20			30	30					F7010001	Drehstabverstellung *torsion bar*	T
1.4 HDi, 2.0 16V	07.02 -	890	780	E7025-120	A, 18, 20			30	25					F7025001	Drehstabverstellung	T

PEUGEOT

Modell	Baujahr	Achslast Vorne kg	Achslast Hinten kg	Artikel-Nr.	Hinweise	ab Nachtrag ...xx BE	bis Nachtrag ...xx BE	ca. Tieferl. Vorne mm	ca. Tieferl. Hinten mm	Ø Vorne mm	Ø Hinten mm	Verstellbarkeit Vorne	Verstellbarkeit Hinten	Ersatzteilbez. Vorne	Ersatzteilbez. Hinten	Gutachten
Model	*Year*	*Front Axle Load kg*	*Rear Axle Load kg*	*Part-No.*	*Notes*	*from suppl. ...xx of type approval*	*to suppl. ...xx of type approval*	*ca. Lowering Front mm*	*ca. Lowering Rear mm*	*Ø Front mm*	*Ø Rear mm*	*Adjustable Front*	*Adjustable Rear*	*Spare Part Marking Front*	*Spare Part Marking Rear*	*Homologation*
206 SW (2E/K)																
Sportline (Performance Fahrwerksfedern Sport | *Sport Performance Springs*)																
1.1, 1.4, 1.4 16V, 1.4 HDi, 1.6 16V, 1.6 HDi 110, 2.0 16V, 2.0 HDi	07.02 -	890	780	E20-70-002-01-20	A, 20			45-50	30					F21-70-002-01-VA	Drehstabverstellung *torsion bar*	T
B12 Pro-Kit (Performance Komplettfahrwerke | *Performance Springs+Shocks*)																
1.4 HDi, 2.0 16V	07.02 -	890	780	E90-70-002-04-20	A, 18, 20, 78, 161			30	30					F7025001	BI-35-050162	T
1.1, 1.4, 1.4 16V	07.02 -	890	730	E90-70-002-01-20	A, 18, 20, 78, 161			30	30					F7003001	BI-35-050162	T
1.6 16V	07.02 -	890	730	E90-70-002-02-20	A, 18, 20, 78, 161			30	30					F2204001	BI-35-050162	T
1.6 HDi 110, 2.0 HDi	07.02 -	890	730	E90-70-002-03-20	A, 18, 20, 78, 161			30	30					F7010001	BI-35-050162	T
B12 Sportline (Performance Komplettfahrwerke Sport | *Sport Performance Springs+Shocks*)																
1.1, 1.4, 1.4 16V, 1.4 HDi, 1.6 16V, 1.6 HDi 110, 2.0 16V, 2.0 HDi	07.02 -	890	730	E95-70-002-01-20	A, 18, 20, 78, 161			45-50	30					F21-70-002-01-VA	BI-35-050162	T
Pro-Street-S (Gewindefahrwerke - höhenverstellbar | *Coil-Overs-Adjustable Ride Hight*)																
1.1, 1.4, 1.4 16V, 1.4 HDi, 1.6 16V, 1.6 HDi 110, 2.0 16V, 2.0 HDi	07.02 -	890	780	PSS65-70-002-01-22	A, 24, 25, 38, 45, 160			35-65	35-65							T
206+ (T3E)																
Pro-Kit (Performance Fahrwerksfedern | *Performance Springs*)																
1.1, 1.4 HDi eco 70, 1.4 i, 1.6 16V	01.09 -	855	780	E7024-120	A, 18, 20			20-25	10-15					F2204001	Drehstabverstellung *torsion bar*	T
B12 Pro-Kit (Performance Komplettfahrwerke | *Performance Springs+Shocks*)																
1.1, 1.4 HDi eco 70, 1.4 i, 1.6 16V	01.09 -	855	780	E90-70-002-02-20	A, 18, 20, 78, 161			20-25	10-15					F2204001	BI-35-050162	T
207 (WA_, WC_)																
Pro-Kit (Performance Fahrwerksfedern | *Performance Springs*)																
1.4, 1.4 Bioflex, 1.4 16V, 1.6, 1.6 16V, 1.6 16V Vti, 1.6 16V Turbo, 1.6 16V RC	02.06 -	1000	900	E10-70-010-01-22	A, 18, 20			30	30					F11-70-009-01-VA	F11-70-009-01-HA	T
1.4 HDi, 1.6 HDi, 1.6 HDi 110	02.06 -	1050	900	E10-70-010-02-22	A, 18, 20			30	30					F11-70-010-02-VA	F11-70-009-01-HA	T
B12 Pro-Kit (Performance Komplettfahrwerke | *Performance Springs+Shocks*)																
1.4, 1.4 Bioflex, 1.4 16V, 1.6, 1.6 16V, 1.6 16V Vti, 1.6 16V Turbo, 1.6 16V RC	02.06 -	1000	900	E90-70-010-02-22	A, 18, 20, 50, 78, 161			30	30					F11-70-009-01-VA	F11-70-009-01-HA	T
1.4, 1.4 Bioflex, 1.4 16V, 1.6, 1.6 16V, 1.6 16V Vti, 1.6 16V Turbo, 1.6 16V RC	02.06 -	1000	900	E90-70-010-01-22	A, 18, 20, 78, 99, 161			30	30					F11-70-009-01-VA	F11-70-009-01-HA	T
1.4 HDi, 1.6 HDi, 1.6 HDi 110	02.06 -	1050	900	E90-70-010-04-22	A, 18, 20, 50, 78, 161			30	30					F11-70-010-02-VA	F11-70-009-01-HA	T
1.4 HDi, 1.6 HDi, 1.6 HDi 110	02.06 -	1050	900	E90-70-010-03-22	A, 18, 20, 78, 99, 161			30	30					F11-70-010-02-VA	F11-70-009-01-HA	T
Pro-Street-S (Gewindefahrwerke - höhenverstellbar | *Coil-Overs-Adjustable Ride Hight*)																
1.4, 1.4 Bioflex, 1.4 16V, 1.6, 1.6 16V, 1.6 16V Vti, 1.6 16V Turbo, 1.6 16V RC, 1.4 HDi, 1.6 HDi, 1.6 HDi 110	02.06 -	1000	900	PSS65-70-010-01-22	A, 24, 25, 38, 45, 50, 160			35-65	35-65							T
207 CC (WD_)																
Pro-Kit (Performance Fahrwerksfedern | *Performance Springs*)																
1.6 16V, 1.6 16V Turbo, 1.6 HDi	02.07 -	1050	900	E10-70-010-02-22	A, 18, 20			30	30					F11-70-010-02-VA	F11-70-009-01-HA	T
B12 Pro-Kit (Performance Komplettfahrwerke | *Performance Springs+Shocks*)																
1.6 16V, 1.6 16V Turbo, 1.6 HDi	02.07 -	1050	900	E90-70-010-04-22	A, 18, 20, 50, 78, 161			30	30					F11-70-010-02-VA	F11-70-009-01-HA	T
Pro-Street-S (Gewindefahrwerke - höhenverstellbar | *Coil-Overs-Adjustable Ride Hight*)																
1.6 16V, 1.6 16V Turbo, 1.6 HDi	02.07 -	1000	900	PSS65-70-010-01-22	A, 24, 25, 38, 45, 50, 160			35-65	35-65							T
207 Stufenheck																
207 Saloon																
Pro-Kit (Performance Fahrwerksfedern | *Performance Springs*)																
1.4, 1.4 Bioflex, 1.6 Bioflex	12.07 -	1000	900	E10-70-010-01-22	A, 18, 20			30	30					F11-70-009-01-VA	F11-70-009-01-HA	T
B12 Pro-Kit (Performance Komplettfahrwerke | *Performance Springs+Shocks*)																
1.4, 1.4 Bioflex, 1.6 Bioflex	12.07 -	1000	900	E90-70-010-01-22	A, 18, 20, 78, 99, 161			30	30					F11-70-009-01-VA	F11-70-009-01-HA	T
1.4, 1.4 Bioflex, 1.6 Bioflex	12.07 -	1000	900	E90-70-010-02-22	A, 18, 20, 50, 78, 161			30	30					F11-70-009-01-VA	F11-70-009-01-HA	T
207 SW (WK_)																
Pro-Kit (Performance Fahrwerksfedern | *Performance Springs*)																
1.4, 1.4 16V, 1.6 16V, 1.6 16V RC	02.07 -	1000	900	E10-70-010-03-22	A, 18, 20			30	30					F11-70-009-01-VA	F11-70-010-01-HA	T
1.6 HDi	06.07 -	1050	900	E10-70-010-04-22	A, 18, 20			30	30					F11-70-010-02-VA	F11-70-010-01-HA	T
207 Van																
Pro-Kit (Performance Fahrwerksfedern | *Performance Springs*)																
1.4 HDi, 1.6 HDi	04.07 -	1050	900	E10-70-010-04-22	A, 18, 20			30	30					F11-70-010-02-VA	F11-70-010-01-HA	T
208																
Pro-Kit (Performance Fahrwerksfedern | *Performance Springs*)																
1.0, 1.2, 1.4, 1.4 HDi, 1.6, 1.6 GTi, 1.6 HDi	03.12 -	1000	900	E10-70-010-01-22	A, 18, 20			25	25					F11-70-009-01-VA	F11-70-009-01-HA	T
B12 Pro-Kit (Performance Komplettfahrwerke | *Performance Springs+Shocks*)																
1.0, 1.2, 1.4, 1.4 HDi, 1.6, 1.6 GTi, 1.6 HDi	03.12 -	1000	900	E90-70-010-05-22	A, 18, 20, 78, 99, 161, 198			25	25					F11-70-009-01-VA	F11-70-009-01-HA	T
1.0, 1.2, 1.4, 1.4 HDi, 1.6, 1.6 GTi, 1.6 HDi	03.12 -	1000	900	E90-70-010-06-22	A, 18, 20, 50, 78, 161, 198			25	25					F11-70-009-01-VA	F11-70-009-01-HA	T
1.6, 1.6 HDI	03.12 -	1000	900	E90-70-010-07-22	A, 18, 20, 50, 78, 161, 199			25	25					F11-70-009-01-VA	F11-70-009-01-HA	T
306 (7B, N3, N5)																
Pro-Kit (Performance Fahrwerksfedern | *Performance Springs*)																
1.1, 1.4 SL, 1.6, 1.6 SR	06.94 - 05.01	950	820	E7010-120	A, 18, 20			30	30					F7010001	Drehstabverstellung *torsion bar*	T
1.8, 1.8 16V, 1.8 ST, 1.9 D, 1.9 SLD, 1.9 SRDT, 1.9 STD, 2.0, 2.0 HDI 90, 2.0 S16, 2.0 ST	02.94 - 05.01	950	820	E7011-120	A, 18, 20			30	30					F7011001	Drehstabverstellung *torsion bar*	T
B12 Pro-Kit (Performance Komplettfahrwerke | *Performance Springs+Shocks*)																
1.1, 1.4 SL, 1.6, 1.6 SR	06.94 - 05.01	950	820	E90-70-003-01-20	A, 18, 20, 78, 161			30	30					F7010001	BI-35-041337	T
1.8, 1.8 16V, 1.8 ST, 1.9 D, 1.9 SLD, 1.9 SRDT, 1.9 STD, 2.0, 2.0 HDI 90, 2.0 S16, 2.0 ST	02.94 - 05.01	950	820	E90-70-003-02-20	A, 18, 20, 78, 161			30	30					F7011001	BI-35-041337	T

PEUGEOT

Modell *Model*	Baujahr *Year*	Achslast Vorne kg *Front Axle Load kg*	Achslast Hinten kg *Rear Axle Load kg*	Artikel-Nr. *Part-No.*	Hinweise *Notes*	ab Nachtrag ...xx BE *from suppl. ...xx of type approval*	bis Nachtrag ...xx BE *to suppl. ...xx of type approval*	ca. Tieferl. Vorne mm *ca. Lowering Front mm*	ca. Tieferl. Hinten mm *ca. Lowering Rear mm*	Ø Vorne mm *Ø Front mm*	Ø Hinten mm *Ø Rear mm*	Verstellbarkeit Vorne *Adjustable Front*	Verstellbarkeit Hinten *Adjustable Rear*	Ersatzteilbez. Vorne *Spare Part Marking Front*	Ersatzteilbez. Hinten *Spare Part Marking Rear*	Gutachten *Homologation*
306 Break (7E, N3, N5)																
Pro-Kit (Performance Fahrwerksfedern | *Performance Springs*)																
1.4, 1.6	03.97 - 04.02	950	820	E7010-120	A, 18, 20			30	30					F7010001	Drehstabverstellung *torsion bar*	T
1.8, 1.8 16V, 1.9 D, 1.9 TD, 2.0, 2.0 HDI 90	02.97 - 04.02	950	820	E7011-120	A, 18, 20			30	30					F7011001	Drehstabverstellung *torsion bar*	T
B12 Pro-Kit (Performance Komplettfahrwerke | *Performance Springs+Shocks*)																
1.4, 1.6	03.97 - 04.02	950	820	E90-70-003-01-20	A, 18, 20, 78, 161			30	30					F7010001	BI-35-041337	T
1.8, 1.8 16V, 1.9 D, 1.9 TD, 2.0, 2.0 HDI 90	02.97 - 04.02	950	820	E90-70-003-02-20	A, 18, 20, 78, 161			30	30					F7010001	BI-35-041337	T
306 Cabriolet (7D, N3, N5) ***306 Convertible (7D, N3, N5)***																
Pro-Kit (Performance Fahrwerksfedern | *Performance Springs*)																
1.6, 1.8, 1.8 16V, 2.0, 2.0 16V	03.94 - 04.02	950	820	E7011-120	A, 18, 20			30	30					F7011001	Drehstabverstellung *torsion bar*	T
B12 Pro-Kit (Performance Komplettfahrwerke | *Performance Springs+Shocks*)																
1.6, 1.8, 1.8 16V, 2.0, 2.0 16V	03.94 - 04.02	950	820	E90-70-003-02-20	A, 18, 20, 78, 161			30	30					F7010001	BI-35-041337	T
306 Schrägheck (7A, 7C, N3, N5) ***306 Hatchback (7A, 7C, N3, N5)***																
Pro-Kit (Performance Fahrwerksfedern | *Performance Springs*)																
1.1, 1.4, 1.6	05.93 - 05.01	950	820	E7010-120	A, 18, 20			30	30					F7010001	Drehstabverstellung *torsion bar*	T
1.8, 1.8 16V, 1.8 D, 1.9 D, 1.9 DT, 2.0 16V, 2.0 HDI 90, 2.0 S16, 2.0 XSi	04.93 - 05.01	950	820	E7011-120	A, 18, 20			30	30					F7011001	Drehstabverstellung *torsion bar*	T
B12 Pro-Kit (Performance Komplettfahrwerke | *Performance Springs+Shocks*)																
1.1, 1.4, 1.6	05.93 - 05.01	950	820	E90-70-003-01-20	A, 18, 20, 78, 161			30	30					F7010001	BI-35-041337	T
1.8, 1.8 16V, 1.8 D, 1.9 D, 1.9 DT, 2.0 16V, 2.0 HDI 90, 2.0 S16, 2.0 XSi	04.93 - 05.01	950	820	E90-70-003-02-20	A, 18, 20, 78, 161			30	30					F7010001	BI-35-041337	T
307 (3A/C)																
Pro-Kit (Performance Fahrwerksfedern | *Performance Springs*)																
1.4, 1.4 16V, 1.6 16V, 1.6 BioFlex, 2.0 16V	08.00 -	1050	900	E10-70-004-01-22	A, 18, 20			30	30					F11-70-004-01-VA	F11-70-004-01-HA	T
1.4 HDi, 1.6 HDi, 1.6 HDi 110, 2.0 HDi 110, 2.0 HDi 135, 2.0 HDi 90	08.00 -	1100	900	E10-70-004-02-22	A, 18, 20			30	30					F11-70-004-02-VA	F11-70-004-01-HA	T
Sportline (Performance Fahrwerksfedern Sport | *Sport Performance Springs*)																
1.4, 1.4 16V, 1.4 HDi, 1.6 16V, 1.6 BioFlex, 1.6 HDi, 1.6 HDi 110, 2.0 16V, 2.0 HDi 110, 2.0 HDi 135, 2.0 HDi 90	08.00 -	1020	900	E20-70-004-01-22	A, 20			40-50	30					F21-70-004-01-VA	F21-70-004-01-HA	T
B12 Pro-Kit (Performance Komplettfahrwerke | *Performance Springs+Shocks*)																
1.4, 1.4 16V, 1.6 16V, 1.6 BioFlex, 2.0 16V	08.00 -	1050	900	E90-70-004-01-22	A, 18, 20, 78, 161			30	30					F11-70-004-01-VA	F11-70-004-01-HA	T
1.4 HDi, 1.6 HDi, 2.0 HDi 110, 2.0 HDi 135, 2.0 HDi 90	08.00 -	1100	900	E90-70-004-02-22	A, 18, 20, 78, 161			30	30					F11-70-004-02-VA	F11-70-004-01-HA	T
B12 Sportline (Performance Komplettfahrwerke Sport | *Sport Performance Springs+Shocks*)																
1.4, 1.4 16V, 1.4 HDi, 1.6 16V, 1.6 BioFlex, 1.6 HDi, 1.6 HDi 110, 2.0 16V, 2.0 HDi 110, 2.0 HDi 135, 2.0 HDi 90	08.00 -	1020	900	E95-70-004-01-22	A, 20, 78, 161			40-50	30					F21-70-004-01-VA	F21-70-004-01-HA	T
Pro-Street-S (Gewindefahrwerke - höhenverstellbar | *Coil-Overs-Adjustable Ride Hight*)																
1.4, 1.4 16V, 1.4 HDi, 1.6 16V, 1.6 HDi, 1.6 HDi 110, 2.0 16V, 2.0 HDi 110, 2.0 HDi 135, 2.0 HDi 90	08.00 -	1000	850	PSS65-70-004-01-22	A, 24, 25, 45, 160			40-70	40-70							T
307 Break (3E)																
Pro-Kit (Performance Fahrwerksfedern | *Performance Springs*)																
1.4, 1.4 16V, 1.6 16V, 1.6 BioFlex, 2.0, 2.0 16V	03.02 -	1050	1105	E10-70-004-05-22	A, 18, 20			30	30					F11-70-004-01-VA	F11-70-004-05-HA	T
1.4 HDi, 1.6 HDi, 1.6 HDi 110, 2.0 HDi 110, 2.0 HDi 90, 2.0 HDi 135	03.02 -	1100	1105	E10-70-004-06-22	A, 18, 20			30	30					F11-70-004-02-VA	F11-70-004-05-HA	T
Pro-Street-S (Gewindefahrwerke - höhenverstellbar | *Coil-Overs-Adjustable Ride Hight*)																
1.4, 1.4 16V, 1.4 HDi, 1.6 16V, 1.6 BioFlex, 1.6 HDi, 1.6 HDi 110, 2.0, 2.0 16V, 2.0 HDI 110, 2.0 HDI 90, 2.0 HDi 135	03.02 -	1065	1065	PSS65-70-004-02-22	A, 24, 25, 45, 160			30-70	30-70							T
307 CC (3B)																
Pro-Kit (Performance Fahrwerksfedern | *Performance Springs*)																
1.6 16V, 2.0 16V	10.03 -	1050	1105	E10-70-004-09-22	A, 18, 20			30	30					F11-70-004-01-VA	F11-70-004-05-HA	T
2.0 HDi 135	06.05 -	1100	1105	E10-70-004-10-22	A, 18, 20			30	30					F11-70-004-02-VA	F11-70-004-05-HA	T
Pro-Street-S (Gewindefahrwerke - höhenverstellbar | *Coil-Overs-Adjustable Ride Hight*)																
1.6 16V, 2.0 16V, 2.0 HDi 135	10.03 -	1100	970	PSS65-70-004-01-22	A, 24, 25, 45, 160			35-65	35-65							T
307 SW (3H)																
Pro-Kit (Performance Fahrwerksfedern | *Performance Springs*)																
1.4, 1.4 16V, 1.6 16V, 1.6 BioFlex, 2.0 16V	03.02 -	1050	1105	E10-70-004-05-22	A, 18, 20			30	30					F11-70-004-01-VA	F11-70-004-05-HA	T
1.6 HDI 110, 1.6 HDI 90, 2.0 HDI 110, 2.0 HDI 90, 2.0 HDi 135	03.02 -	1100	1105	E10-70-004-06-22	A, 18, 20			30	30					F11-70-004-02-VA	F11-70-004-05-HA	T
Pro-Street-S (Gewindefahrwerke - höhenverstellbar | *Coil-Overs-Adjustable Ride Hight*)																
1.4, 1.4 16V, 1.6 16V, 1.6 BioFlex, 1.6 HDI 110, 1.6 HDI 90, 2.0 16V, 2.0 HDI 110, 2.0 HDI 90, 2.0 HDi 135	03.02 -	1065	1065	PSS65-70-004-02-22	A, 24, 25, 45, 160			30-70	30-70							T
308 (4A_, 4C_)																
Pro-Kit (Performance Fahrwerksfedern | *Performance Springs*)																
1.4 16V, 1.6, 1.6 16V, 1.6 BioFlex, 1.6 GTi, 1.6 HDi	09.07 -	1100	1020	E10-70-012-01-22	A, 18, 20			30	10					F11-70-012-01-VA	F11-70-012-01-HA	T
1.6, 1.6 16V, 1.6 BioFlex, 1.6 GTi, 1.6 HDi, 2.0 HDi	09.07 -	1200	1020	E10-70-012-02-22	A, 18, 20			30	10					F11-70-012-02-VA	F11-70-012-01-HA	T
308 CC																
Pro-Kit (Performance Fahrwerksfedern | *Performance Springs*)																
1.6 16V, 1.6 THP	06.09 -	1100	1020	E10-70-012-01-22	A, 18, 20			35	20					F11-70-012-01-VA	F11-70-012-01-HA	T
1.6 16V, 1.6 HDi, 1.6 THP, 2.0 HDi	04.09 -	1200	1020	E10-70-012-02-22	A, 18, 20			35	20					F11-70-012-02-VA	F11-70-012-01-HA	T
Pro-Street-S (Gewindefahrwerke - höhenverstellbar | *Coil-Overs-Adjustable Ride Hight*)																
1.6 16V, 1.6 HDi, 1.6 THP	06.09 -	1100	1020	PSS65-70-004-01-22	A, 24, 25, 45, 160			30-60	30-55							T

PEUGEOT

Modell	Baujahr	Achslast Vorne kg	Achslast Hinten kg	Artikel-Nr.	Hinweise	ab Nachtrag ...xx BE	bis Nachtrag ...xx BE	ca. Tieferl. Vorne mm	ca. Tieferl. Hinten mm	Ø Vorne mm	Ø Hinten mm	Verstellbarkeit Vorne	Verstellbarkeit Hinten	Ersatzteilbez. Vorne	Ersatzteilbez. Hinten	Gutachten
Model	*Year*	*Front Axle Load kg*	*Rear Axle Load kg*	*Part-No.*	*Notes*	*from suppl. ...xx of type approval*	*to suppl. ...xx of type approval*	*ca. Lowering Front mm*	*ca. Lowering Rear mm*	*Ø Front mm*	*Ø Rear mm*	*Adjustable Front*	*Adjustable Rear*	*Spare Part Marking Front*	*Spare Part Marking Rear*	*Homologation*
308 II																
Pro-Kit (Performance Fahrwerksfedern | *Performance Springs*)																
1.2 THP 110, 1.2 THP 130, 1.2 VTi 72, 1.6, 1.6 THP 125, 1.6 THP 150, 1.6 THP 163, 1.6 VTi, 1.6 HDi, 1.6 HDi 100, 1.6 BlueHDi 120	09.13 -	1000	900	E10-70-018-01-22	A, 18, 20			30	20					F11-70-018-01-VA	F11-70-018-01-HA	T
1.6 GT 205	11.13 -	1000	900	E10-70-018-01-22	A, 18, 20			15-20	15					F11-70-018-01-VA	F11-70-018-01-HA	
1.2 THP 130, 1.6, 1.6 THP 125, 1.6 THP 150, 1.6 THP 163, 1.6 VTi, 1.6 HDi, 1.6 HDi 100, 1.6 BlueHDi 120, 2.0 BlueHDI 150	11.13 -	1100	900	E10-70-018-02-22	A, 18, 20			30	20					F11-22-015-01-VA	F11-70-018-01-HA	T
1.6 GT 205, 2.0 GT HDi 180	11.13 -	1100	900	E10-70-018-02-22	A, 18, 20			15-20	15					F11-22-015-01-VA	F11-70-018-01-HA	T
308 SW II																
Pro-Kit (Performance Fahrwerksfedern | *Performance Springs*)																
1.2 THP 110, 1.2 THP 130, 1.6 THP 125, 1.6 THP 150, 1.6 THP 155, 1.6 THP 163, 1.6 VTi, 1.6 HDi 92, 1.6 HDi 100, 1.6 HDi 115, 1.6 BlueHDi 120	03.14 -	1000	980	E10-70-018-03-22	A, 18, 20			30	20					F11-70-018-01-VA	F11-70-018-03-RA	T
1.6 GT 205	03.14 -	1000	980	E10-70-018-03-22	A, 18, 20			15-20	15					F11-70-018-01-VA	F11-70-018-03-RA	
1.2 THP 130, 1.6 THP 125, 1.6 THP 150, 1.6 THP 155, 1.6 THP 163, 1.6 VTi, 1.6 HDi 92, 1.6 HDi 100, 1.6 HDi 115, 1.6 BlueHDi 120, 2.0 BlueHDI 150, 2.0 BlueHDI 180	03.14 -	1100	980	E10-70-018-04-22	A, 18, 20			30	20					F11-22-015-01-VA	F11-70-018-03-RA	T
1.6 GT 205, 2.0 GT HDi 180	03.14 -	1100	980	E10-70-018-04-22	A, 18, 20			15-20	15					F11-22-015-01-VA	F11-70-018-03-RA	T
309 I (10C, 10A)																
Pro-Kit (Performance Fahrwerksfedern | *Performance Springs*)																
1.9 GTI	10.86 - 07.89	750	750	E7005-120	A, 18, 20			20-30	30					F7005001	Drehstabverstellung *torsion bar*	T
309 II (3C, 3A)																
Pro-Kit (Performance Fahrwerksfedern | *Performance Springs*)																
1.9 GTI, 1.9 GTI 16V	07.89 - 12.93	750	750	E7005-120	A, 18, 20			20-30	30					F7005001	Drehstabverstellung *torsion bar*	T
406 (8B)																
Pro-Kit (Performance Fahrwerksfedern | *Performance Springs*)																
1.9 D, 1.9 TD, 2.0, 2.0 16V, 2.0 16V HPi, 2.0 HDI 110, 2.0 HDI 90, 2.0 HDi 110, 2.0 Turbo, 2.1 TD 12V, 2.2, 2.2 HDi, 3.0 24V, 3.0 V6	11.95 - 05.04	1230	1200	E7015-140	A, 18, 20			30	30					F7015001	F7014002	T
406 Coupe (8C)																
Pro-Kit (Performance Fahrwerksfedern | *Performance Springs*)																
2.2 HDI, 3.0 V6, 3.0 V6 24V	03.97 - 12.04	1150	950	E7020-140	A, 18, 20			25	25					F7015001	F7019002	T
508																
Pro-Kit (Performance Fahrwerksfedern | *Performance Springs*)																
2.0 HDi	11.10 -	1250	1100	E10-70-016-04-22	A, 18, 20			25	25					F11-70-016-02-VA	F11-22-009-01-HA	T
508 SW																
Pro-Kit (Performance Fahrwerksfedern | *Performance Springs*)																
2.0 HDI, 2.0 HDi 150, 2.0 HDi 180	11.10 -	1250	1130	E10-70-016-02-22	A, 18, 20			25	25					F11-70-016-02-VA	F11-70-016-01-HA	T
806 (221)																
Pro-Kit (Performance Fahrwerksfedern | *Performance Springs*)																
1.8, 1.9 TD, 2.0, 2.0 16V, 2.0 HDI, 2.0 HDI 16V, 2.0 Turbo, 2.1 td 12V	06.94 - 08.02	1230	1300	E7012-140	A, 18, 20			30	30					F3015001	F3015002	T
807 (E)																
Pro-Kit (Performance Fahrwerksfedern | *Performance Springs*)																
2.0, 2.0 16V, 2.0 HDI, 2.0 HDi, 2.2, 2.2 HDi, 3.0 V6	06.02 -	1370	1300	E10-70-005-01-22	A, 18, 20			30	10					F3015001	F3015002	T
1007 (KM_)																
Pro-Kit (Performance Fahrwerksfedern | *Performance Springs*)																
1.4, 1.4 16V, 1.4 HDi, 1.6 16V	04.05 -	920	825	E10-70-009-01-22	A, 18, 20			30	30					F11-70-009-01-VA	F11-70-009-01-HA	T
B12 Pro-Kit (Performance Komplettfahrwerke | *Performance Springs+Shocks*)																
1.4, 1.4 16V, 1.4 HDi, 1.6 16V	04.05 -	920	825	E90-70-009-03-22	A, 18, 20, 78, 161			30	30					F11-70-009-01-VA	F11-70-009-01-HA	T
2008																
Pro-Kit (Performance Fahrwerksfedern | *Performance Springs*)																
1.2 VTi, 1.6 VTi	03.13 -	1000	900	E10-70-017-01-22	A, 18, 20			30	30					F11-70-009-01-VA	F11-22-010-01-HA	T
1.4 HDi, 1.6 HDi	03.13 -	1000	900	E10-70-017-02-22	A, 18, 20			30	30					F11-70-010-02-VA	F11-22-010-01-HA	T
4008																
Pro-Kit (Performance Fahrwerksfedern | *Performance Springs*)																
1.6 HDi AWC, 1.8 HDi AWC	05.12 -	1130	1000	E10-60-016-02-22	A, 18			30	25					F11-60-013-02-VA	F11-60-013-01-HA	T
5008																
Pro-Kit (Performance Fahrwerksfedern | *Performance Springs*)																
1.6 16V, 1.6 HDi, 2.0 HDi	06.09 -	1200	1250	E10-70-014-01-22	A, 18, 20			20-25	20-25					F11-70-013-02-VA	F11-70-014-01-HA	T
EXPERT (224)																
Pro-Kit (Performance Fahrwerksfedern | *Performance Springs*)																
1.6, 1.8, 1.9 D, 1.9 TD, 2.0, 2.0 HDI, 2.0 HDi	02.96 -	1230	1100	E7012-140	A, 18, 20			30	30					F3015001	F3015002	T
EXPERT Kasten (222) ***EXPERT Box (222)***																
Pro-Kit (Performance Fahrwerksfedern | *Performance Springs*)																
1.6, 1.8, 1.9 D, 1.9 D 70, 1.9 TD, 2.0, 2.0 HDI	02.96 -	1230	1100	E7012-140	A, 18, 20			30	30					F3015001	F3015002	T
EXPERT Pritsche/Fahrgestell (223) ***EXPERT Platform/Chassis (223)***																
Pro-Kit (Performance Fahrwerksfedern | *Performance Springs*)																
1.6, 1.9 D, 1.9 TD, 2.0 HDi	02.96 -	1230	1100	E7012-140	A, 18, 20			30	30					F3015001	F3015002	T
PARTNER Combispace (5F)																
Pro-Kit (Performance Fahrwerksfedern | *Performance Springs*)																
1.1, 1.4, 1.6 16V, 1.8, 1.9 D, 2.0 HDI, 1.6 HDi 75, 1.6 HDi 90	03.03 -	1000	1000	E10-22-005-01-20	A, 18, 20			30	30					F7010001	Drehstabverstellung *torsion bar*	T
1.1, 1.4, 1.6 16V, 1.8, 1.9 D, 2.0 HDI	05.96 - 02.03	1110	800	E7021-120	A, 18, 20			25	25					F7011001	Drehstabverstellung *torsion bar*	T

PEUGEOT

PORSCHE

Modell *Model*	Baujahr *Year*	Achslast Vorne kg *Front Axle Load kg*	Achslast Hinten kg *Rear Axle Load kg*	Artikel-Nr. *Part-No.*	Hinweise *Notes*	ab Nachtrag ...xx BE *from suppl. ...xx of type approval*	bis Nachtrag ...xx BE *to suppl. ...xx of type approval*	ca. Tieferl. Vorne mm *ca. Lowering Front mm*	ca. Tieferl. Hinten mm *ca. Lowering Rear mm*	Ø Vorne mm *Ø Front mm*	Ø Hinten mm *Ø Rear mm*	Verstellbarkeit Vorne *Adjustable Front*	Verstellbarkeit Hinten *Adjustable Rear*	Ersatzteilbez. Vorne *Spare Part Marking Front*	Ersatzteilbez. Hinten *Spare Part Marking Rear*	Gutachten *Homologation*
PARTNER Kasten (5) ***PARTNER Box (5)***																
Pro-Kit (Performance Fahrwerksfedern | *Performance Springs*)																
1.1, 1.4, 1.6 HDi 75, 1.6 HDi 90, 1.8 D, 1.9 D, 2.0 HDi	03.03 -	1000	1000	E10-22-005-01-20	A, 18, 20			30	30					F7010001	Drehstabverstellung *torsion bar*	T
1.1, 1.4, 1.6, 1.8 D, 1.9 D, 2.0 HDi	05.96 - 02.03	1110	800	E7021-120	A, 18, 20			25	25					F7011001	Drehstabverstellung *torsion bar*	T
PARTNER Kasten ***PARTNER Box***																
Pro-Kit (Performance Fahrwerksfedern | *Performance Springs*)																
1.6 HDi 90 Sitzplätze 5, 1.6 HDi Sitzplätze 5, 1.6 Sitzplätze 5 *1.6 HDi 90 Seats 5, 1.6 HDi Seats 5, 1.6 Seats 5*	04.08 -	1170	1000	E10-22-007-03-22	A, 18, 20, 66			30	10					F11-22-007-03-VA	F11-22-007-03-HA	T
PARTNER Tepee																
Pro-Kit (Performance Fahrwerksfedern | *Performance Springs*)																
1.6 HDi 90 Sitzplätze 5, 1.6 HDi Sitzplätze 5, 1.6 Sitzplätze 5 *1.6 HDi 90 Seats 5, 1.6 HDi Seats 5, 1.6 Seats 5*	04.08 -	1170	1000	E10-22-007-03-22	A, 18, 20, 66			30	10					F11-22-007-03-VA	F11-22-007-03-HA	T
RCZ																
Pro-Kit (Performance Fahrwerksfedern | *Performance Springs*)																
1.6 16V	03.10 -	1100	850	E10-70-015-01-22	A, 18, 20			20	20					F11-70-015-01-VA	F11-70-015-01-HA	T
2.0 HDi	03.10 -	1100	850	E10-70-015-02-22	A, 18, 20			20	20					F11-70-015-02-VA	F11-70-015-01-HA	T
B12 Pro-Kit (Performance Komplettfahrwerke | *Performance Springs+Shocks*)																
1.6 16V	03.10 -	1100	850	E90-70-015-01-22	A, 18, 20, 78, 161			20	20					F11-70-015-01-VA	F11-70-015-01-HA	T
2.0 HDi	03.10 -	1100	850	E90-70-015-02-22	A, 18, 20, 78, 161			20	20					F11-70-015-02-VA	F11-70-015-01-HA	T
911 (964)																
Pro-Kit (Performance Fahrwerksfedern | *Performance Springs*)																
3.3 Turbo, 3.3 Turbo S, 3.6 Carrera, 3.6 Carrera 4, 3.6 Turbo	12.88 - 09.93	780	1100	E7201-140	A, 18			30-40	30					F7201001	F7201002	
911 (993)																
Pro-Kit (Performance Fahrwerksfedern | *Performance Springs*)																
3.6 Carrera, 3.6 Carrera 4, 3.8 Carrera, 3.8 Carrera 4, 3.8 Carrera RS	10.93 - 09.97	760	1080	E7208-140	A, 18			30	30					F7208001	F7208002	T
B12 Pro-Kit (Performance Komplettfahrwerke | *Performance Springs+Shocks*)																
3.6 Carrera, 3.6 Carrera 4, 3.8 Carrera, 3.8 Carrera 4	10.93 - 09.97	760	1080	E90-72-002-01-22	A, 18, 20, 78, 129, 161			30	30					F7208001	F7208002	T
911 (996)																
Pro-Kit (Performance Fahrwerksfedern | *Performance Springs*)																
3.4 Carrera, 3.6 Carrera, 3.6 Carrera S	09.97 - 08.05	775	1180	E7213-140	A, 18, 20			30	30					F7213001	F7213002	
B12 Pro-Kit (Performance Komplettfahrwerke | *Performance Springs+Shocks*)																
3.4 Carrera, 3.6 Carrera, 3.6 Carrera S	09.97 - 08.05	775	1180	E90-72-001-01-22	A, 18, 20, 78, 128, 161			30	30					F7213001	F7213002	
911 (997)																
Pro-Kit (Performance Fahrwerksfedern | *Performance Springs*)																
3.6 Carrera, 3.8 Carrera S, 3.8 Carrera GTS	07.04 -	775	1220	E10-72-007-01-22	A, 18, 20			30	30					F11-72-007-01-VA	F11-72-007-01-HA	T
3.6 Carrera 4, 3.6 Turbo, 3.8 Carrera 4GTS, 3.8 Carrera 4S, 3.8 Carrera GTS, 3.8 Turbo, 3.8 Turbo S	07.04 -	825	1250	E10-72-007-02-22	A, 18			20	20					F11-72-007-02-VA	F11-72-007-02-HA	T
B12 Pro-Kit (Performance Komplettfahrwerke | *Performance Springs+Shocks*)																
3.6 Carrera, 3.8 Carrera S, 3.8 Carrera GTS	07.04 -	775	1220	E90-72-007-01-22	A, 18, 20, 161, 192			30	30					F11-72-007-01-VA	F11-72-007-01-HA	T
3.6 Carrera 4, 3.6 Turbo, 3.8 Carrera 4GTS, 3.8 Carrera 4S, 3.8 Carrera GTS, 3.8 Turbo, 3.8 Turbo S	03.06 -	825	1250	E90-72-007-02-22	A, 18, 161, 192			20	20					F11-72-007-02-VA	F11-72-007-01-HA	T
3.6 Carrera, 3.8 Carrera S, 3.8 Carrera GTS	07.04 -	775	1220	E90-72-007-03-22	A, 18, 20, 161, 168			30	30					F11-72-007-01-VA	F11-72-007-01-HA	T
3.6 Carrera 4, 3.6 Turbo, 3.8 Carrera 4GTS, 3.8 Carrera 4S, 3.8 Carrera GTS, 3.8 Turbo, 3.8 Turbo S	03.06 -	825	1250	E90-72-007-04-22	A, 18, 161, 168			20	20					F11-72-007-02-VA	F11-72-007-01-HA	T
911 (991)																
Pro-Kit (Performance Fahrwerksfedern | *Performance Springs*)																
3.4 Carrera, 3.8 Carrera S	12.11 -	775	1215	E10-72-012-01-22	A, 18, 20, 168			20-25	15					F11-72-012-01-VA	F11-72-012-01-HA	T
3.4 Carrera 4, 3.8 Carrera 4S	11.12 -	800	1215	E10-72-012-02-22	A, 18, 168			20-25	15					F11-72-012-02-VA	F11-72-012-01-HA	T
3.8 Turbo, 3.8 Turbo S	09.13 -	800	1220	E10-72-012-03-22	A, 18, 168			20	10					F11-72-012-02-VA	F11-72-012-03-HA	T
B12 Pro-Kit (Performance Komplettfahrwerke | *Performance Springs+Shocks*)																
3.4 Carrera, 3.8 Carrera S	12.11 -	775	1215	E90-72-012-01-22	A, 18, 20, 161, 192			20-25	15					F11-72-012-01-VA	F11-72-012-01-HA	T
3.4 Carrera 4, 3.8 Carrera 4S	11.12 -	800	1215	E90-72-012-02-22	A, 18, 161, 192			20-25	15					F11-72-012-02-VA	F11-72-012-01-HA	T
3.4 Carrera, 3.8 Carrera S	12.11 -	775	1215	E90-72-012-03-22	A, 18, 20, 161, 168			20-25	15					F11-72-012-01-VA	F11-72-012-01-HA	T
3.4 Carrera 4, 3.8 Carrera 4S	11.12 -	800	1215	E90-72-012-04-22	A, 18, 161, 168			20-25	15					F11-72-012-02-VA	F11-72-012-01-HA	T
3.8 Turbo, 3.8 Turbo S	09.13 -	800	1220	E90-72-012-05-22	A, 18, 161, 192			20	10					F11-72-012-02-VA	F11-72-012-03-HA	T
3.8 Turbo, 3.8 Turbo S	09.13 -	800	1220	E90-72-012-06-22	A, 18, 161, 168			20	10					F11-72-012-02-VA	F11-72-012-03-HA	T
911 Cabriolet (964) ***911 Convertible (964)***																
Pro-Kit (Performance Fahrwerksfedern | *Performance Springs*)																
3.6 Carrera, 3.6 Carrera 4	05.89 - 05.94	780	1100	E7201-140	A, 18			30-40	30					F7201001	F7201002	E
911 Cabriolet (993) ***911 Convertible (993)***																
Pro-Kit (Performance Fahrwerksfedern | *Performance Springs*)																
3.6 Carrera, 3.6 Carrera 4, 3.8 Carrera, 3.8 Carrera 4	07.94 - 09.97	760	1080	E7208-140	A, 18			30	30					F7208001	F7208002	T
B12 Pro-Kit (Performance Komplettfahrwerke | *Performance Springs+Shocks*)																
3.6 Carrera, 3.6 Carrera 4, 3.8 Carrera, 3.8 Carrera 4	07.94 - 09.97	760	1080	E90-72-002-01-22	A, 18, 78, 129, 161			30	30					F7208001	F7208002	T

PORSCHE

Modell *Model*	Baujahr *Year*	Achslast Vorne kg *Front Axle Load kg*	Achslast Hinten kg *Rear Axle Load kg*	Artikel-Nr. *Part-No.*	Hinweise *Notes*	ab Nachtrag ...xx BE *from suppl. ...xx of type approval*	bis Nachtrag ...xx BE *to suppl. ...xx of type approval*	ca. Tieferl. Vorne mm *ca. Lowering Front mm*	ca. Tieferl. Hinten mm *ca. Lowering Rear mm*	Ø Vorne mm *Ø Front mm*	Ø Hinten mm *Ø Rear mm*	Verstellbarkeit Vorne *Adjustable Front*	Verstellbarkeit Hinten *Adjustable Rear*	Ersatzteilbez. Vorne *Spare Part Marking Front*	Ersatzteilbez. Hinten *Spare Part Marking Rear*	Gutachten *Homologation*
911 Cabriolet (997) ***911 Convertible (997)***																
Pro-Kit (Performance Fahrwerksfedern | *Performance Springs*)																
3.6 Carrera, 3.8 Carrera S, 3.8 Carrera GTS	04.05 -	775	1220	E10-72-007-01-22	A, 18, 20			30	30					F11-72-007-01-VA	F11-72-007-01-HA	T
3.6 Carrera 4, 3.6 Turbo, 3.8 Carrera 4S, 3.8 Carrera GTS, 3.8 Carrera 4 GTS, 3.8 Turbo, 3.8 Turbo S	03.06 -	825	1250	E10-72-007-02-22	A, 18			20	20					F11-72-007-02-VA	F11-72-007-02-HA	T
B12 Pro-Kit (Performance Komplettfahrwerke | *Performance Springs+Shocks*)																
3.6 Carrera, 3.8 Carrera S, 3.8 Carrera GTS	04.05 -	775	1220	E90-72-007-01-22	A, 18, 20, 161, 192			30	30					F11-72-007-01-VA	F11-72-007-01-HA	T
3.6 Carrera 4, 3.6 Turbo, 3.8 Carrera 4S, 3.8 Carrera GTS, 3.8 Carrera 4 GTS, 3.8 Turbo, 3.8 Turbo S	03.06 -	825	1250	E90-72-007-02-22	A, 18, 161, 192			20	20					F11-72-007-02-VA	F11-72-007-01-HA	T
3.6 Carrera, 3.8 Carrera S, 3.8 Carrera GTS	04.05 -	775	1220	E90-72-007-03-22	A, 18, 20, 161, 168			30	30					F11-72-007-01-VA	F11-72-007-01-HA	T
3.6 Carrera 4, 3.6 Turbo, 3.8 Carrera 4S, 3.8 Carrera GTS, 3.8 Carrera 4 GTS, 3.8 Turbo, 3.8 Turbo S	03.06 -	825	1250	E90-72-007-04-22	A, 18, 161, 168			20	20					F11-72-007-02-VA	F11-72-007-01-HA	T
911 Cabriolet (991) ***911 Convertible (991)***																
Pro-Kit (Performance Fahrwerksfedern | *Performance Springs*)																
3.4 Carrera, 3.8 Carrera S	03.12 -	775	1205	E10-72-012-01-22	A, 18, 20, 168			20-25	15					F11-72-012-01-VA	F11-72-012-01-HA	T
3.4 Carrera 4, 3.8 Carrera 4S	11.12 -	790	1215	E10-72-012-02-22	A, 18, 168			20-25	15					F11-72-012-02-VA	F11-72-012-01-HA	T
B12 Pro-Kit (Performance Komplettfahrwerke | *Performance Springs+Shocks*)																
3.4 Carrera, 3.8 Carrera S	03.12 -	775	1205	E90-72-012-01-22	A, 18, 20, 161, 192			20-25	15					F11-72-012-01-VA	F11-72-012-01-HA	T
3.4 Carrera 4, 3.8 Carrera 4S	11.12 -	790	1215	E90-72-012-02-22	A, 18, 161, 192			20-25	15					F11-72-012-02-VA	F11-72-012-01-HA	T
3.4 Carrera, 3.8 Carrera S	03.12 -	775	1205	E90-72-012-03-22	A, 18, 20, 161, 168			20-25	15					F11-72-012-01-VA	F11-72-012-01-HA	T
3.4 Carrera 4, 3.8 Carrera 4S	11.12 -	790	1215	E90-72-012-04-22	A, 18, 161, 168			20-25	15					F11-72-012-02-VA	F11-72-012-01-HA	T
911 Targa (993)																
Pro-Kit (Performance Fahrwerksfedern | *Performance Springs*)																
3.6 Carrera, 3.8 Carrera	08.95 - 09.97	760	1080	E7208-140	A, 18			30	30					F7208001	F7208002	T
B12 Pro-Kit (Performance Komplettfahrwerke | *Performance Springs+Shocks*)																
3.6 Carrera, 3.8 Carrera	08.95 - 09.97	760	1080	E90-72-002-01-22	A, 18, 20, 78, 129, 161			30	30					F7208001	F7208002	T
911 Targa (996)																
Pro-Kit (Performance Fahrwerksfedern | *Performance Springs*)																
3.6 Carrera	12.01 - 08.05	775	1180	E7213-140	A, 18, 20			30	30					F7213001	F7213002	E
B12 Pro-Kit (Performance Komplettfahrwerke | *Performance Springs+Shocks*)																
3.6 Carrera	12.01 - 08.05	775	1180	E90-72-001-01-22	A, 18, 20, 78, 128, 161			30	30					F7213001	F7213002	E
911 Targa (997)																
Pro-Kit (Performance Fahrwerksfedern | *Performance Springs*)																
3.6 Carrera 4, 3.8 Carrera 4S	07.06 -	825	1250	E10-72-007-02-22	A, 18			20	20					F11-72-007-02-VA	F11-72-007-02-HA	T
B12 Pro-Kit (Performance Komplettfahrwerke | *Performance Springs+Shocks*)																
3.6 Carrera 4, 3.8 Carrera 4S	07.06 -	825	1250	E90-72-007-02-22	A, 18, 161, 192			20	20					F11-72-007-02-VA	F11-72-007-01-HA	T
3.6 Carrera 4, 3.8 Carrera 4S	07.06 -	825	1250	E90-72-007-04-22	A, 18, 161, 168			20	20					F11-72-007-02-VA	F11-72-007-01-HA	T
BOXSTER (986)																
Pro-Kit (Performance Fahrwerksfedern | *Performance Springs*)																
2.5, 2.7	09.96 - 12.04	775	940	E7212-140	A, 18, 20			25	25					F7212001	F7212002	T
B12 Pro-Kit (Performance Komplettfahrwerke | *Performance Springs+Shocks*)																
2.5, 2.7	09.96 - 12.04	775	940	E90-72-004-01-22	A, 18, 20, 78, 161			25	25					F7212001	F7212002	T
BOXSTER (987)																
Pro-Kit (Performance Fahrwerksfedern | *Performance Springs*)																
2.7, 2.9, S 3.2, S 3.4, Spyder 3.4	11.04 -	785	940	E10-72-006-01-22	A, 18, 20, 56			30	30					F7212001	F7212002	T
B12 Pro-Kit (Performance Komplettfahrwerke | *Performance Springs+Shocks*)																
2.7, 2.9, S 3.2, S 3.4, Spyder 3.4	11.04 -	785	940	E90-72-006-01-22	A, 18, 20, 56, 78, 161			30	30					F7212001	F7212002	T
BOXSTER																
Pro-Kit (Performance Fahrwerksfedern | *Performance Springs*)																
2.7, S 3.4	04.12 -	785	945	E10-72-013-01-22	A, 18, 20, 168			20	20					F11-72-013-01-VA	F11-72-013-01-HA	T
B12 Pro-Kit (Performance Komplettfahrwerke | *Performance Springs+Shocks*)																
2.7, S 3.4	04.12 -	785	945	E90-72-013-01-22	A, 18, 20, 161, 168			20	20					F11-72-013-01-VA	F11-72-013-01-HA	T
CAYENNE (955)																
Pro-Kit (Performance Fahrwerksfedern | *Performance Springs*)																
3.2, S 4.5	09.02 -	1460	1680	E10-72-005-01-22	A, 18			35	35					F11-72-005-01-VA	F11-72-005-01-HA	T
B12 Pro-Kit (Performance Komplettfahrwerke | *Performance Springs+Shocks*)																
3.2, S 4.5	09.02 - 01.07	1460	1680	E90-72-005-01-22	A, 18, 78, 161			35	35					F11-72-005-01-VA	F11-72-005-01-HA	T
CAYENNE																
Pro-Kit (Performance Fahrwerksfedern | *Performance Springs*)																
3.0 S, 3.6, 3.6 S, 3.0 D, 4.2 S Diesel	06.10 -	1440	1550	E10-72-011-01-22	A, 18			25-35	25-35					F11-72-011-01-VA	F11-72-011-01-HA	T
Pro-Tronic (Elektronische Performance Fahrwerksmodule | *Electronic Performance Suspension Moduls*)																
Alle Motorisierungen / *all motorisation*	06.10 -			AM65-15-011-01-22	A, 175											
B12 Pro-Kit (Performance Komplettfahrwerke | *Performance Springs+Shocks*)																
3.0 S, 3.6, 3.6 S, 3.0 D, 4.2 S Diesel	06.10 -	1400	1535	E90-72-011-01-22	A, 18, 20, 161, 168, 193			25-35	25-35					F11-72-011-01-VA	F11-72-011-01-HA	T

PORSCHE

PROTON

RENAULT

Modell	Baujahr	Achslast Vorne kg	Achslast Hinten kg	Artikel-Nr.	Hinweise	ab Nachtrag ...xx BE	bis Nachtrag ...xx BE	ca. Tieferl. Vorne mm	ca. Tieferl. Hinten mm	Ø Vorne mm	Ø Hinten mm	Verstellbarkeit Vorne	Verstellbarkeit Hinten	Ersatzteilbez. Vorne	Ersatzteilbez. Hinten	Gutachten
Model	*Year*	*Front Axle Load kg*	*Rear Axle Load kg*	*Part-No.*	*Notes*	*from suppl. ...xx of type approval*	*to suppl. ...xx of type approval*	*ca. Lowering Front mm*	*ca. Lowering Rear mm*	*Ø Front mm*	*Ø Rear mm*	*Adjustable Front*	*Adjustable Rear*	*Spare Part Marking Front*	*Spare Part Marking Rear*	*Homologation*
CAYMAN (987)																
Pro-Kit (Performance Fahrwerksfedern | *Performance Springs*)																
2.7, 2.9, S 3.4 Sport, S 3.4	11.05 -	785	940	E10-72-008-01-22	A, 18, 20, 56			30	20-25					F7212001	F11-72-008-01-HA	T
B12 Pro-Kit (Performance Komplettfahrwerke | *Performance Springs+Shocks*)																
2.7, 2.9, S 3.4 Sport, S 3.4	11.05 -	785	940	E90-72-008-01-22	A, 18, 20, 56, 78, 161			30	20-25					F7212001	F11-72-008-01-HA	T
CAYMAN (981)																
Pro-Kit (Performance Fahrwerksfedern | *Performance Springs*)																
2.7, S 3.4	03.13 -	785	945	E10-72-013-01-22	A, 18, 20, 168			20	10					F11-72-013-01-VA	F11-72-013-01-HA	T
B12 Pro-Kit (Performance Komplettfahrwerke | *Performance Springs+Shocks*)																
2.7, S 3.4	03.12 -	785	945	E90-72-013-02-22	A, 18, 20, 161, 168			20	10					F11-72-013-01-VA	F11-72-013-01-HA	T
MACAN																
Pro-Kit (Performance Fahrwerksfedern | *Performance Springs*)																
2.0 Diesel	01.15 -			E10-72-014-01-22	A, 18			30	25					F11-72-014-01-FA	F11-72-014-01-RA	T
3.0 S, 3.6 Turbo, 3.0 S Diesel	02.14 -	1290	1475	E10-72-014-02-22	A, 18			30	25					F11-72-014-02-FA	F11-72-014-01-RA	T
2.0 Diesel	01.15 -			E10-72-014-03-22	A, 18, 168			30	25					F11-72-014-03-FA	F11-72-014-01-RA	
3.0 S, 3.6 Turbo, 3.0 S Diesel	02.14 -	1290	1475	E10-72-014-04-22	A, 18, 168			30	25					F11-72-014-04-FA	F11-72-014-01-RA	
PERSONA 300 (C9_M)																
Pro-Kit (Performance Fahrwerksfedern | *Performance Springs*)																
316, 316 GLXi	03.96 -	880	850	E10-61-001-01-22	A, 18, 20			30	30					F6105001	F6025002	T
PERSONA 400 (C9_S)																
Pro-Kit (Performance Fahrwerksfedern | *Performance Springs*)																
1.8, 416, 416 GLXi, 418, 420 GLS D, 420 TD	01.94 -	830	790	E6105-140	A, 18, 20			30	30					F6105001	F6021002	T
PERSONA 400 Hatchback (C9_C, C9_S)																
Pro-Kit (Performance Fahrwerksfedern | *Performance Springs*)																
1.8, 416 GLXi, 416 i, 418 GLXi, 420 D, 420 GLS D	01.94 -	830	790	E6105-140	A, 18, 20			30	30					F6105001	F6021002	T
CAPTUR																
Pro-Kit (Performance Fahrwerksfedern | *Performance Springs*)																
0,9 TCe 90, 1.2 TCe 120	06.13 -	1000	880	E10-75-018-01-22	A, 18, 20			25	25					F11-75-018-01-VA	F11-75-018-01-HA	T
1.5 dCi 90	06.13 -	1000	880	E10-75-018-02-22	A, 18, 20			25	25					F11-75-018-02-VA	F11-75-018-01-HA	T
Pro-Lift-Kit (Performance Höherlegung | *Performance Lift Springs*)																
0,9 TCe 90, 1.2 TCe 120	06.13 -	1000	880	E30-75-018-01-22	A, 18, 20			+25	+25					F31-75-018-01-VA	F31-75-018-01-HA	T
1.5 dCi 90	06.13 -	1000	880	E30-75-018-02-22	A, 18, 20			+25	+25					F31-75-018-02-VA	F31-75-018-01-HA	T
CLIO Grandtour (KR0/1_)																
Pro-Kit (Performance Fahrwerksfedern | *Performance Springs*)																
1.2 16V, 1.2 16V Hi-Flex	02.08 - 03.09	850	890	E10-75-008-08-22	A, 18, 20			30	25					F11-75-008-01-VA	F11-75-008-08-HA	T
1.2 16V, 1.2 16V Hi-Flex	04.09 -	850	890	E10-75-008-12-22	A, 18, 20			30	25					F11-75-008-10-VA	F11-75-008-08-HA	T
1.5 dCi, 1.6 16V	02.08 - 06.10	950	890	E10-75-008-09-22	A, 18, 20			30	25					F11-75-008-02-VA	F11-75-008-08-HA	T
1.5 dCi, 1.6 16V	04.09 -	950	890	E10-75-008-13-22	A, 18, 20			30	25					F11-75-008-11-VA	F11-75-008-08-HA	T
CLIO I (B/C57_, 5/357_)																
Pro-Kit (Performance Fahrwerksfedern | *Performance Springs*)																
1.1, 1.2, 1.4, 1.7, 1.8, 1.8 16V, 1.8 Rsi, 1.9 D	05.90 - 09.98	770	685	E7514-120	A, 18, 20			30	30					F7514001	Drehstabverstellung *torsion bar*	T
Sportline (Performance Fahrwerksfedern Sport | *Sport Performance Springs*)																
1.1, 1.2, 1.4, 1.7, 1.8, 1.8 16V, 1.8 Rsi, 1.9 D	05.90 - 09.98	770	725	E20-75-001-01-20	A, 20			45-50	30					F21-75-001-01-VA	Drehstabverstellung *torsion bar*	T
CLIO II (BB0/1/2_, CB0/1/2_)																
Pro-Kit (Performance Fahrwerksfedern | *Performance Springs*)																
1.2, 1.2 16V	09.98 -	800	785	E10-75-001-01-22	A, 18, 20			30	30					F7513001	F7524002	T
1.4, 1.4 16V, 1.5 dCi, 1.6, 1.6 16V, 1.9 D, 1.9 dTi, 2.0 16V Sport	09.98 -	860	785	E10-75-001-02-22	A, 18, 20			30	30					F7514001	F7524002	T
Sportline (Performance Fahrwerksfedern Sport | *Sport Performance Springs*)																
1.2, 1.2 16V	09.98 -	800	785	E20-75-001-02-22	A, 20			45-50	30					F21-75-001-01-VA	F21-75-001-02-HA	T
1.4, 1.4 16V, 1.5 dCi, 1.6, 1.6 16V, 1.9 D, 1.9 dTi, 2.0 16V Sport	09.98 -	860	785	E20-75-001-03-22	A, 20			45-50	30					F21-75-001-03-VA	F21-75-001-02-HA	T
CLIO III (BR0/1, CR0/1)																
Pro-Kit (Performance Fahrwerksfedern | *Performance Springs*)																
1.2 16V, 1.2 16V Hi-Flex	06.05 - 03.09	850	880	E10-75-008-01-22	A, 18, 20			30	30					F11-75-008-01-VA	F11-75-008-01-HA	T
1.2 16V, 1.2 16V Hi-Flex	04.09 -	850	880	E10-75-008-10-22	A, 18, 20			30	30					F11-75-008-10-VA	F11-75-008-01-HA	T
1.4 16V, 1.5 dCi, 1.6 16V, 1.6 16V GT, 2.0 16V	04.09 -	950	880	E10-75-008-11-22	A, 18, 20			30	30					F11-75-008-11-VA	F11-75-008-01-HA	T
1.4 16V, 1.5 dCi, 1.6 16V, 1.6 16V GT, 1.6 Hi-Flex, 2.0 16V	05.05 - 06.10	950	880	E10-75-008-02-22	A, 18, 20			30	30					F11-75-008-02-VA	F11-75-008-01-HA	T
2.0 16V Sport	02.06 -	1000	880	E10-75-008-07-22	A, 18, 20			20	25					F11-75-008-07-VA	F11-75-008-07-HA	T
2.0 16V Sport	02.06 -	1000	880	E10-75-008-14-22	A, 18, 20			15	25					F11-75-008-14-VA	F11-75-008-07-HA	T
CLIO IV																
Pro-Kit (Performance Fahrwerksfedern | *Performance Springs*)																
0.9 TCe 90, 1.2 16V, 1.2 TCe 120	11.12 -	860	885	E10-75-017-01-22	A, 18, 20			25-30	25					F11-75-017-01-VA	F11-75-017-01-HA	T
1.2 Tce 120, 1.5 dCi 75, 1.5 dCi 90	11.12 -	950	885	E10-75-017-02-22	A, 18, 20			25-30	25					F11-75-008-10-VA	F11-75-017-01-HA	T

Modell *Model*	Baujahr *Year*	Achslast Vorne kg *Front Axle Load kg*	Achslast Hinten kg *Rear Axle Load kg*	Artikel-Nr. *Part-No.*	Hinweise *Notes*	ab Nachtrag ...xx BE *from suppl. ...xx of type approval*	bis Nachtrag ...xx BE *to suppl. ...xx of type approval*	ca. Tieferl. Vorne mm *ca. Lowering Front mm*	ca. Tieferl. Hinten mm *ca. Lowering Rear mm*	Ø Vorne mm *Ø Front mm*	Ø Hinten mm *Ø Rear mm*	Verstellbarkeit Vorne *Adjustable Front*	Verstellbarkeit Hinten *Adjustable Rear*	Ersatzteilbez. Vorne *Spare Part Marking Front*	Ersatzteilbez. Hinten *Spare Part Marking Rear*	Gutachten *Homologation*
CLIO IV																
B12 Pro-Kit (Performance Komplettfahrwerke | *Performance Springs+Shocks*)																
0.9 TCe 90, 1.2 16V, 1.2 TCe 120	11.12 -	860	885	E90-75-017-01-22	A, 18, 20, 161			25-30	25					F11-75-017-01-VA	F11-75-017-01-HA	T
1.2 Tce 120, 1.5 dCi 75, 1.5 dCi 90	11.12 -	950	885	E90-75-017-02-22	A, 18, 20, 161			25-30	25					F11-75-008-10-VA	F11-75-017-01-HA	T
CLIO Grandtour IV																
Pro-Kit (Performance Fahrwerksfedern | *Performance Springs*)																
0.9 TCe 90, 1.2 16V, 1.2 TCe 120	01.13 -	860	900	E10-75-017-03-22	A, 18, 20			25-30	25					F11-75-017-01-VA	F11-75-017-03-HA	T
1.2 Tce 120, 1.5 dCi 75, 1.5 dCi 90	01.13 -	950	900	E10-75-017-04-22	A, 18, 20			25-30	25					F11-75-008-10-VA	F11-75-017-03-HA	T
FLUENCE (L30_)																
Pro-Kit (Performance Fahrwerksfedern | *Performance Springs*)																
1.5 dCi, 1.6 16V, 2.0 16V	06.05 -	1010	1041	E10-75-012-01-22	A, 18, 20			30	25					F11-75-012-01-VA	F11-75-012-01-HA	T
GRAND SCÉNIC III (JZ0/1_)																
Pro-Kit (Performance Fahrwerksfedern | *Performance Springs*)																
1.4 16V, 1.5 dCi, 1.6 16V, 1.9 dCi, 2.0 16V	02.09 -	1110	1260	E10-75-014-03-22	A, 18, 20			20-30	25					F11-75-012-02-VA	F11-75-014-03-HA	T
1.6 dCi, 2.0 dCi	02.09 -	1230	1260	E10-75-014-04-22	A, 18, 20			25	25					F11-75-014-02-VA	F11-75-014-03-HA	T
KADJAR (RFE)																
Pro-Kit (Performance Fahrwerksfedern | *Performance Springs*)																
1.2 TCe 130, 1.5 dCi 110	06.15 -	1025	970	E10-63-027-01-22	A, 18, 20, 171			30	30					F11-63-027-01-VA	F11-63-027-01-HA	T
1.6 dCi 130	06.15 -	1150	970	E10-63-027-02-22	A, 18, 20, 171			30	30					F11-63-027-02-VA	F11-63-027-01-HA	T
1.6 dCi 130 4x4	06.15 -	1150	1015	E10-63-027-03-22	A, 18, 170			30	30					F11-63-027-02-VA	F11-63-027-03-HA	T
Pro-Lift-Kit (Performance Höherlegung | *Performance Lift Springs*)																
1.2 TCe 130, 1.5 dCi 110	06.15 -	1025	970	E30-63-027-01-22	A, 18, 20, 171			+30	+20					F31-63-027-01-VA	F31-63-027-01-HA	T
1.6 dCi 130	06.15 -	1150	970	E30-63-027-02-22	A, 18, 20, 171			+30	+20					F31-63-027-02-VA	F31-63-027-01-HA	T
1.6 dCi 130 4x4	06.15 -	1150	1015	E30-63-027-03-22	A, 18, 170			+30	+30					F31-63-027-02-VA	F31-63-027-03-HA	T
KOLEOS (HY_)																
Pro-Kit (Performance Fahrwerksfedern | *Performance Springs*)																
2.0 dCi, 2.0 dCi 4x4	09.08 -	1235	1180	E10-75-011-01-22	A, 18			30	25					F11-75-011-01-VA	F11-75-011-01-HA	T
LAGUNA Coupe (DT0/1)																
Pro-Kit (Performance Fahrwerksfedern | *Performance Springs*)																
2.0 16V Turbo, 2.0 GT, 3.5 V6	09.08 -	1160	960	E10-75-010-05-22	A, 18, 20			30	20					F11-75-010-01-VA	F11-75-010-05-HA	T
2.0 dCi, 2.0 dCi GT	03.08 -	1280	960	E10-75-010-06-22	A, 18, 20			30	20					F11-75-010-02-VA	F11-75-010-05-HA	T
LAGUNA II (BG0/1_)																
Pro-Kit (Performance Fahrwerksfedern | *Performance Springs*)																
1.6 16V, 1.8 16V, 1.9 dCI, 1.9 dCi, 2.0 16V, 2.0 16V IDE, 2.0 16V Turbo	03.01 -	1090	1110	E10-75-002-01-22	A, 18, 20			30	30					F11-75-002-01-VA	F11-75-002-01-HA	T
2.0 dCi, 2.2 dCi, 3.0 V6 24V	03.01 -	1190	1110	E10-75-002-02-22	A, 18, 20			30	30					F11-75-002-02-VA	F11-75-002-01-HA	T
LAGUNA II Grandtour (KG0/1_)																
Pro-Kit (Performance Fahrwerksfedern | *Performance Springs*)																
1.6 16V, 1.6 Flexfuel, 1.8 16V, 2.0, 2.0 16V, 2.0 16V IDE, 2.0 16V Turbo, 1.9 dCi	03.01 -	1090	1110	E10-75-002-03-22	A, 18, 20			30	30					F11-75-002-01-VA	F11-75-002-01-HA	T
2.0 dCi, 2.2 dCi, 3.0 V6 24V	03.01 -	1190	1110	E10-75-002-04-22	A, 18, 20			30	30					F11-75-002-02-VA	F11-75-002-01-HA	T
LAGUNA III (BT0/1)																
Pro-Kit (Performance Fahrwerksfedern | *Performance Springs*)																
1.5 dCi, 1.6 16V, 2.0 16V, 2.0 16V Hi-Flex, 2.0 16V Turbo, 2.0 GT, 3.5 V6	10.07 -	1160	1113	E10-75-010-01-22	A, 18, 20			30	25					F11-75-010-01-VA	F11-75-010-01-HA	T
2.0 dCi, 2.0 dCi GT	10.07 -	1280	1113	E10-75-010-02-22	A, 18, 20			30	25					F11-75-010-02-VA	F11-75-010-01-HA	T
LAGUNA III Grandtour (KT0/1)																
Pro-Kit (Performance Fahrwerksfedern | *Performance Springs*)																
1.5 dCi, 1.6 16V, 2.0 16V, 2.0 16V Hi-Flex, 2.0 16V Turbo, 2.0 GT, 3.5 V6	10.07 -	1160	1113	E10-75-010-03-22	A, 18, 20			30	30					F11-75-010-01-VA	F11-75-010-01-HA	T
2.0 dCi, 2.0 dCi GT	10.07 -	1280	1113	E10-75-010-04-22	A, 18, 20			30	30					F11-75-010-02-VA	F11-75-010-01-HA	T
MEGANE CC (EZ0/1_)																
Pro-Kit (Performance Fahrwerksfedern | *Performance Springs*)																
1.2 TCe, 1.4 TCe, 1.6 16V, 1.5 dCi, 1.6 dCi	06.10 -	1010	1260	E10-75-012-06-22	A, 18, 20			30	30					F11-75-012-01-VA	F11-75-014-03-HA	T
1.2 TCe, 2.0 CVT, 2.0 TCe, 2.0 Turbo, 1.5 dCi, 1.6 dCi	06.10 -	1110	1260	E10-75-012-07-22	A, 18, 20			30	30					F11-75-012-02-VA	F11-75-014-03-HA	T
2.0 TCe, 2.0 Turbo, 1.6 dCi, 1.9 dCi, 2.0 dCi	06.10 -	1230	1260	E10-75-014-04-22	A, 18, 20			30	30					F11-75-014-02-VA	F11-75-014-03-HA	T
MEGANE I (BA0/1_)																
Pro-Kit (Performance Fahrwerksfedern | *Performance Springs*)																
1.4 Eco, 1.4 e, 1.6 e, 1.6 i, 2.0 i	01.96 - 08.03	900	870	E7520-120	A, 18, 20			30	30					F7520001	Drehstabverstellung *torsion bar*	T
MEGANE I Cabriolet (EA0/1_)																
Pro-Kit (Performance Fahrwerksfedern | *Performance Springs*)																
1.6 e, 2.0, 2.0 i	10.96 - 08.03	900	870	E7520-120	A, 18, 20			30	30					F7520001	Drehstabverstellung *torsion bar*	T
MEGANE I Classic (LA0/1_)																
Pro-Kit (Performance Fahrwerksfedern | *Performance Springs*)																
1.4, 1.6 e, 1.6 i, 2.0 i	09.96 - 08.03	900	870	E7520-120	A, 18, 20			30	30					F7520001	Drehstabverstellung *torsion bar*	T
MEGANE I Coach (DA0/1_)																
Pro-Kit (Performance Fahrwerksfedern | *Performance Springs*)																
1.6 e, 2.0 i	03.96 - 08.03	900	870	E7520-120	A, 18, 20			30	30					F7520001	Drehstabverstellung *torsion bar*	T

RENAULT

Modell *Model*	Baujahr *Year*	Achslast Vorne kg *Front Axle Load kg*	Achslast Hinten kg *Rear Axle Load kg*	Artikel-Nr. *Part-No.*	Hinweise *Notes*	ab Nachtrag ...xx BE *from suppl. ...xx of type approval*	bis Nachtrag ...xx BE *to suppl. ...xx of type approval*	ca. Tieferl. Vorne mm *ca. Lowering Front mm*	ca. Tieferl. Hinten mm *ca. Lowering Rear mm*	Ø Vorne mm *Ø Front mm*	Ø Hinten mm *Ø Rear mm*	Verstellbarkeit Vorne *Adjustable Front*	Verstellbarkeit Hinten *Adjustable Rear*	Ersatzteilbez. Vorne *Spare Part Marking Front*	Ersatzteilbez. Hinten *Spare Part Marking Rear*	Gutachten *Homologation*
MEGANE II (BM0/1_, CM0/1_)																
Pro-Kit (Performance Fahrwerksfedern | *Performance Springs*)																
2.0 Renault Sport	05.04 -	1060	930	E10-75-003-15-22	A, 18, 20			25	25					F11-75-003-15-VA	F11-75-003-15-HA	T
1.4 16V, 1.5 dCi, 1.6, 1.6 16V, 1.6 Flex-Fuel	11.02 -	1130	930	E10-75-003-01-22	A, 18, 20			30	30					F11-75-003-01-VA	F11-75-003-01-HA	T
1.9 dCi, 2.0, 2.0 16V, 2.0 16V Turbo, 2.0 dCi	11.02 -	1185	930	E10-75-003-02-22	A, 18, 20			30	30					F11-75-003-02-VA	F11-75-003-01-HA	T
MEGANE II Coupé-Cabriolet (EM0/1_)																
Pro-Kit (Performance Fahrwerksfedern | *Performance Springs*)																
1.5 dCi, 1.6, 1.6 16V	09.03 -	1130	1025	E10-75-003-09-22	A, 18, 20			30	30					F11-75-003-01-VA	F11-75-005-01-HA	T
1.9 dCi, 2.0, 2.0 16V Turbo, 2.0 dCi	09.03 -	1185	1025	E10-75-003-10-22	A, 18, 20			30	30					F11-75-003-02-VA	F11-75-005-01-HA	T
MEGANE II Kombi (KM0/1_) ***MEGANE II Estate (KM0/1_)***																
Pro-Kit (Performance Fahrwerksfedern | *Performance Springs*)																
1.4, 1.5 dCi, 1.6, 1.6 16V, 1.6 16V Hi-Flex	08.03 -	1130	1010	E10-75-003-05-22	A, 18, 20			30	30					F11-75-003-01-VA	F11-75-003-05-HA	T
1.9 dCi, 2.0, 2.0 dCi	08.03 -	1185	1010	E10-75-003-06-22	A, 18, 20			30	30					F11-75-003-02-VA	F11-75-003-05-HA	T
MEGANE II Stufenheck (LM0/1_) ***MEGANE II Saloon (LM0/1_)***																
Pro-Kit (Performance Fahrwerksfedern | *Performance Springs*)																
1.4, 1.5 dCi, 1.6, 1.6 16V, 1.6 Hi-Flex	09.03 -	1130	1010	E10-75-003-07-22	A, 18, 20			30	25					F11-75-003-01-VA	F11-75-003-05-HA	T
1.9 dCi, 2.0, 2.0 dCi	09.03 -	1185	1010	E10-75-003-08-22	A, 18, 20			30	25					F11-75-003-02-VA	F11-75-003-05-HA	T
MEGANE III Coupe (DZ0/1_)																
Pro-Kit (Performance Fahrwerksfedern | *Performance Springs*)																
1.2 TCe, 1.4 TCe, 1.5 dCi, 1.6 16V, 1.6 dCi, 2.0 CVT, 2.0 TCe, 2.0 TCe 220	11.08 -	1010	1041	E10-75-012-01-22	A, 18, 20			15	15					F11-75-012-01-VA	F11-75-012-01-HA	T
2.0 R.S.	11.08 -	1102	855	E10-75-012-05-22	A, 18, 20			25	15					F11-75-012-05-VA	F11-75-012-05-HA	T
2.0 CVT, 2.0 TCe, 2.0 TCe 220, 1.6 dCi, 1.9 dCi, 2.0 dCi	11.08 -	1110	1041	E10-75-012-02-22	A, 18, 20			15	15					F11-75-012-02-VA	F11-75-012-01-HA	T
B12 Pro-Kit (Performance Komplettfahrwerke | *Performance Springs+Shocks*)																
2.0 R.S.	11.08 -	1102	855	E90-75-017-05-22	A, 18, 20, 78, 161			25	15					F11-75-012-05-VA	F11-75-012-05-HA	T
1.4 TCe, 1.6 16V, 2.0 CVT, 1.5 dCi, 1.6 dCi	11.08 -	1010	1041	E90-72-017-01-22	A, 18, 20, 78, 161			15	15					F11-75-012-01-VA	F11-75-012-01-HA	T
2.0 CVT, 1.6 dCi, 1.9 dCi, 2.0 dCi	11.08 -	1110	1041	E90-72-017-02-22	A, 18, 20, 78, 161			15	15					F11-75-012-02-VA	F11-75-012-01-HA	T
2.0 TCe, 2.0 TCe 220	11.08 -	1010	1041	E90-72-017-06-22	A, 18, 20, 78, 161			15	15					F11-75-012-02-VA	F11-75-012-01-HA	T
2.0 TCe, 2.0 TCe 220	11.08 -	1110	1041	E90-72-017-07-22	A, 18, 20, 78, 161			15	15					F11-75-012-02-VA	F11-75-012-01-HA	T
MEGANE III Grandtour (KZ0/1)																
Pro-Kit (Performance Fahrwerksfedern | *Performance Springs*)																
1.4 TCe, 1.5 dCi, 1.6 16V, 1.6 dCi, 2.0 CVT, 2.0 TCe	11.08 -	1010	1065	E10-75-012-03-22	A, 18, 20			30	30					F11-75-012-01-VA	F11-75-014-01-HA	T
2.0, 2.0 CVT, 2.0 TCe, 1.6 dCi, 1.9 dCi, 2.0 dCi	11.08 -	1110	1065	E10-75-012-04-22	A, 18, 20			30	30					F11-75-012-02-VA	F11-75-014-01-HA	T
MEGANE III Schrägheck (BZ0_) ***MEGANE III Hatchback (BZ0_)***																
Pro-Kit (Performance Fahrwerksfedern | *Performance Springs*)																
1.2 TCe, 1.4 TCe, 1.5 dCi, 1.6 16V, 1.6 TCe, 1.6 dCi, 2.0 CVT, 2.0 TCe, 2.0 TCe 220	11.08 -	1010	1041	E10-75-012-01-22	A, 18, 20			30	30					F11-75-012-01-VA	F11-75-012-01-HA	T
2.0 CVT, 2.0 TCe, 2.0 TCe 220, 1.6 dCi, 1.9 dCi, 2.0 dCi	11.08 -	1110	1041	E10-75-012-02-22	A, 18, 20			30	30					F11-75-012-02-VA	F11-75-012-01-HA	T
B12 Pro-Kit (Performance Komplettfahrwerke | *Performance Springs+Shocks*)																
1.2 TCe, 1.4 TCe, 1.6 16V, 1.6 Tce, 2.0 CVT, 2.0 TCe, 2.0 TCe 220, 1.5 dCi, 1.6 dCi	11.08 -	1010	1041	E90-75-012-01-22	A, 18, 20, 78, 161			30	30					F11-75-012-01-VA	F11-75-012-01-HA	T
2.0 CVT, 2.0 TCe, 2.0 TCe 220, 1.6 dCi, 1.9 dCi, 2.0 dCi	11.08 -	1110	1041	E90-75-012-02-22	A, 18, 20, 78, 161			30	30					F11-75-012-02-VA	F11-75-012-01-HA	T
MEGANE III Stufenheck ***MEGANE III Saloon***																
Pro-Kit (Performance Fahrwerksfedern | *Performance Springs*)																
1.6 16V	06.09 -	1010	1041	E10-75-012-01-22	A, 18, 20			30	30					F11-75-012-01-VA	F11-75-012-01-HA	T
1.9 dCi	06.09 -	1110	1041	E10-75-012-02-22	A, 18, 20			30	30					F11-75-012-02-VA	F11-75-012-01-HA	T
B12 Pro-Kit (Performance Komplettfahrwerke | *Performance Springs+Shocks*)																
1.6 16V	06.09 -	1010	1041	E90-75-012-01-22	A, 18, 20, 78, 161			30	30					F11-75-012-01-VA	F11-75-012-01-HA	T
1.9 dCi	06.09 -	1110	1041	E90-75-012-02-22	A, 18, 20, 78, 161			30	30					F11-75-012-02-VA	F11-75-012-01-HA	T
SCÉNIC II (JM0/1_)																
Pro-Kit (Performance Fahrwerksfedern | *Performance Springs*)																
1.4, 1.5 dCi, 1.6, 1.6 16V	06.03 -	1130	1025	E10-75-005-01-22	A, 18, 20			30	30					F11-75-003-01-VA	F11-75-005-01-HA	T
1.9 D, 1.9 dCi, 2.0, 2.0 16V Turbo, 2.0 dCi	06.03 -	1185	1025	E10-75-005-02-22	A, 18, 20			30	30					F11-75-003-02-VA	F11-75-005-01-HA	T
SCÉNIC III (JZ0/1_)																
Pro-Kit (Performance Fahrwerksfedern | *Performance Springs*)																
1.4 16V, 1.5 dCi, 1.6 16V, 1.6 E85, 1.9 dCi, 2.0 16V	02.09 -	1110	1065	E10-75-014-01-22	A, 18, 20			20-30	25					F11-75-012-02-VA	F11-75-014-01-HA	T
1.6 dCi, 2.0 dCi	02.09 -	1230	1065	E10-75-014-02-22	A, 18, 20			25	25					F11-75-014-02-VA	F11-75-014-01-HA	T
TWINGO I (C06_)																
Pro-Kit (Performance Fahrwerksfedern | *Performance Springs*)																
1.2, 1.2 16V	03.93 -	700	690	E7518-140	A, 18, 20			30	30					F7518001	F7518002	T
B12 Pro-Kit (Performance Komplettfahrwerke | *Performance Springs+Shocks*)																
1.2	03.93 - 09.99	700	690	E90-75-006-01-22	A, 18, 20, 78, 161			30	30					F7518001	F7518002	T
1.2, 1.2 16V	09.00 -	700	690	E90-75-006-02-22	A, 18, 20, 78, 161			30	30					F7518001	F7518002	T
Pro-Street-S (Gewindefahrwerke - höhenverstellbar | *Coil-Overs-Adjustable Ride Hight*)																
1.2, 1.2 16V	03.93 -	700	595	PSS65-75-006-01-22	A, 24, 25, 45, 160			35-65	35-65							T

RENAULT

SAAB

SEAT

Modell	Baujahr	Achslast Vorne kg	Achslast Hinten kg	Artikel-Nr.	Hinweise	ab Nachtrag ...xx BE	bis Nachtrag ...xx BE	ca. Tieferl. Vorne mm	ca. Tieferl. Hinten mm	Ø Vorne mm	Ø Hinten mm	Verstellbarkeit Vorne	Verstellbarkeit Hinten	Ersatzteilbez. Vorne	Ersatzteilbez. Hinten	Gutachten
Model	*Year*	*Front Axle Load kg*	*Rear Axle Load kg*	*Part-No.*	*Notes*	*from suppl. ...xx of type approval*	*to suppl. ...xx of type approval*	*ca. Lowering Front mm*	*ca. Lowering Rear mm*	*Ø Front mm*	*Ø Rear mm*	*Adjustable Front*	*Adjustable Rear*	*Spare Part Marking Front*	*Spare Part Marking Rear*	*Homologation*
TWINGO II (CN0_)																
Pro-Kit (Performance Fahrwerksfedern | *Performance Springs*)																
1.2, 1.2 16V, 1.2 TCe 100, 1.2 Turbo	03.07 -	810	710	E10-75-009-01-22	A, 18, 20			25	25					F11-75-009-01-VA	F11-75-009-01-HA	T
1.2 16V Automatik, 1.2 Automatik, 1.2 TCe 100 Automatik, 1.2 Turbo Automatik, 1.5 dCi, 1.5 dCi 75, 1.5 dCi 90 *1.2 16V automatic transmission, 1.2 TCe 100 automatic transmission, 1.2 Turbo automatic transmission, 1.2 automatic transmission, 1.5 dCi, 1.5 dCi 75, 1.5 dCi 90*	03.07 -	870	710	E10-75-009-02-22	A, 18, 20			25	25					F11-75-009-02-VA	F11-75-009-01-HA	T
B12 Pro-Kit (Performance Komplettfahrwerke | *Performance Springs+Shocks*)																
1.2 16V Schaltgetriebe, 1.2 Schaltgetriebe, 1.2 TCe 100 Schaltgetriebe, 1.2 Turbo Schaltgetriebe *1.2 16V manual transmission, 1.2 TCe 100 manual transmission, 1.2 Turbo manual transmission, 1.2 manual transmission*	03.07 -	810	710	E90-75-009-01-22	A, 18, 20, 78, 161			25	25					F11-75-009-01-VA	F11-75-009-01-HA	T
1.2, 1.2 16V, 1.2 Turbo, 1.2 TCe, 1.5dCi	03.07 -	870	710	E90-75-009-02-22	A, 18, 20, 78, 161			25	25					F11-75-009-02-VA	F11-75-009-01-HA	T
TWINGO III																
Pro-Kit (Performance Fahrwerksfedern | *Performance Springs*)																
0.9 TCe 90, 1.0 SCe 70	09.14 -	610	790	E10-75-019-01-22	A, 18, 20			25	20					F11-75-019-01-FA	F11-75-019-01-RA	T
WIND (E4M_)																
Pro-Kit (Performance Fahrwerksfedern | *Performance Springs*)																
1.2, 1.2 TCe 100, 1.6	07.10 -	870	710	E10-75-009-02-22	A, 18, 20			20	20					F11-75-009-02-VA	F11-75-009-01-HA	T
9-3 (YS3D)																
Pro-Kit (Performance Fahrwerksfedern | *Performance Springs*)																
2.0 SE Turbo, 2.0 Turbo, 2.0 i, 2.2 TiD, 2.3, 2.3 Turbo, 2.3 i	02.98 - 09.02	1045	875	E7807-140	A, 18, 20			30	30					F7807001	F7804002	T
9-3 (YS3F)																
Pro-Kit (Performance Fahrwerksfedern | *Performance Springs*)																
1,8t, 1,8t BioPower, 1.8 i, 1.9 TTiD, 1.9 TiD, 2.0 t, 2.0 t Bio Power, 2.0 t BioPower, 2.2 TiD	09.02 -	1150	1010	E10-78-003-01-22	A, 18, 20			30	30					F11-65-007-01-VA	F6549002	T
9-3 Cabriolet (YS3D)																
Pro-Kit (Performance Fahrwerksfedern | *Performance Springs*)																
2.0 SE Turbo, 2.0 Turbo, 2.0 i, 2.3, 2.3 Turbo, 2.3 i	02.98 - 08.03	1045	875	E7807-140	A, 18, 20			30	30					F7807001	F7804002	T
9-3 Kombi ***9-3 Estate***																
Pro-Kit (Performance Fahrwerksfedern | *Performance Springs*)																
1.8 i, 1.9 TTiD, 1.9 TiD, 2.0 T, 2.0 T Bio Power, 2.0 t, 2.0 t BioPower, 2.8 Turbo V6	03.05 -	1150	1100	E10-78-003-05-22	A, 18, 20			30	20					F11-65-007-01-VA	F11-78-003-05-HA	T
9-5 (YS3E)																
Pro-Kit (Performance Fahrwerksfedern | *Performance Springs*)																
1.9 TiD, 2.0, 2.0 T, 2.0 T Biopower, 2.0 Turbo SE, 2.0 t, 2.0 t BioPower, 2.2 TiD, 2.3 Turbo, 2.3 t, 2.3 t BioPower, 3.0 TiD, 3.0 V6t	09.97 -	1175	1050	E7806-140	A, 18, 20			30	30					F7806001	F7806002	T
B12 Pro-Kit (Performance Komplettfahrwerke | *Performance Springs+Shocks*)																
2.0, 2.0 T, 2.3 Turbo	10.98 - 08.01	1175	1050	E90-78-002-01-22	A, 18, 20, 78, 117, 161			30	30					F7806001	F7806002	T
2.0, 2.0 T, 2.0 T Biopower, 2.0 t, 2.0 t BioPower, 2.3 Turbo, 2.3 t, 3.0 TiD, 3.0 V6t	10.98 -	1175	1050	E90-78-002-02-22	A, 18, 20, 78, 151, 161			30	30					F7806001	F7806002	T
2.0 Turbo SE, 2.0 t, 2.3 t, 3.0 TiD, 3.0 V6t	09.97 - 08.01	1175	1050	E90-78-002-01-22	A, 18, 20, 78, 117, 161			30	30					F7806001	F7806002	T
1.9 TiD, 2.2 TiD, 2.3 Turbo, 2.3 t BioPower	03.02 -	1175	1050	E90-78-002-02-22	A, 18, 20, 78, 161			30	30					F7806001	F7806002	T
9-5 Kombi (YS3E) ***9-5 Estate (YS3E)***																
Pro-Kit (Performance Fahrwerksfedern | *Performance Springs*)																
1.9 TiD, 2.0, 2.0 t, 2.0 t BioPower, 2.0 t Biopower, 2.2 TiD, 2.3, 2.3 Turbo, 2.3 t, 2.3 t BioPower, 3.0 TiD, 3.0 V6t	10.98 -	1175	1125	E7808-140	A, 18, 20			30	30					F7806001	F7808002	T
B12 Pro-Kit (Performance Komplettfahrwerke | *Performance Springs+Shocks*)																
2.0 t, 2.3 Turbo, 2.3 t, 3.0 TiD, 3.0 V6t	10.98 - 08.01	1175	1125	E90-78-002-03-22	A, 18, 20, 78, 117, 161			30	30					F7806001	F7808002	T
1.9 TiD, 2.2 TiD, 2.3 Turbo, 2.3 t BioPower	09.01 -	1175	1125	E90-78-002-04-22	A, 18, 20, 78, 161			30	30					F7806001	F7808002	T
2.3, 2.3 Turbo, 2.3 t, 3.0 TiD, 3.0 V6t	09.01 -	1175	1125	E90-78-002-04-22	A, 18, 20, 78, 151, 161			30	30					F7806001	F7808002	T
900 II																
Pro-Kit (Performance Fahrwerksfedern | *Performance Springs*)																
2.0 -16 Turbo, 2.0 i, 2.3 -16, 2.5 -24 V6	07.93 - 02.98	1030	875	E7804-140	A, 18, 20			35	35					F6529001	F7804002	T
900 II Cabriolet ***900 II Convertible***																
Pro-Kit (Performance Fahrwerksfedern | *Performance Springs*)																
2.0 -16 Turbo, 2.0 i, 2.3 -16, 2.5 -24 V6	12.93 - 02.98	1030	875	E7804-140	A, 18, 20			35	35					F6529001	F7804002	T
900 II Coupe																
Pro-Kit (Performance Fahrwerksfedern | *Performance Springs*)																
2.0 -16 Turbo, 2.0 i, 2.3 -16, 2.5 -24 V6	12.93 - 02.98	1030	875	E7804-140	A, 18, 20			35	35					F6529001	F7804002	T
ALHAMBRA (7V8, 7V9)																
Pro-Kit (Performance Fahrwerksfedern | *Performance Springs*)																
1.8 T 20V, 2.0 i	04.96 - 03.10	1240	1355	E8107-140	A, 18, 20			30	20-25					F8549001	F8549002	T
1.9 TDI, 2.0 TDI, 2.8 V6	04.96 - 03.10	1260	1355	E8110-140	A, 18, 20			30	20-25					F8552001	F8549002	T
B12 Pro-Kit (Performance Komplettfahrwerke | *Performance Springs+Shocks*)																
1.8 T 20V, 2.0 i	04.96 - 03.10	1240	1355	E90-81-012-01-22	A, 18, 20, 78, 161			30	20-25					F8549001	F8549002	T
1.9 TDI, 2.0 TDI, 2.8 V6	04.96 - 03.10	1260	1355	E90-81-012-02-022	A, 18, 20, 78, 161			30	20-25					F8552001	F8549002	T

Modell *Model*	Baujahr *Year*	Achslast Vorne kg *Front Axle Load kg*	Achslast Hinten kg *Rear Axle Load kg*	Artikel-Nr. *Part-No.*	Hinweise *Notes*	ab Nachtrag ...xx BE *from suppl. ...xx of type approval*	bis Nachtrag ...xx BE *to suppl. ...xx of type approval*	ca. Tieferl. Vorne mm *ca. Lowering Front mm*	ca. Tieferl. Hinten mm *ca. Lowering Rear mm*	Ø Vorne mm *Ø Front mm*	Ø Hinten mm *Ø Rear mm*	Verstellbarkeit Vorne *Adjustable Front*	Verstellbarkeit Hinten *Adjustable Rear*	Ersatzteilbez. Vorne *Spare Part Marking Front*	Ersatzteilbez. Hinten *Spare Part Marking Rear*	Gutachten *Homologation*
ALHAMBRA (710)																
Pro-Kit (Performance Fahrwerksfedern | *Performance Springs*)																
1.4 TSI Sitzplätze 5, 1.8 TFSI Sitzplätze 5, 2.0 TDI Sitzplätze 5, 2.0 TSI Sitzplätze 5 *1.4 TSI Seats 5, 1.8 TFSI Seats 5, 2.0 TDI Seats 5, 2.0 TSI Seats 5*	06.10 -	1220	1150	E10-85-026-01-22	A, 18, 20, 66			25	25					F11-85-012-02-VA	F11-79-008-01-HA	T
1.4 TSI Sitzplätze 5, 1.8 TFSI Sitzplätze 5, 2.0 TDI Sitzplätze 5, 2.0 TSI Sitzplätze 5 *1.4 TSI Seats 5, 1.8 TFSI Seats 5, 2.0 TDI Seats 5, 2.0 TSI Seats 5*	06.10 -	1300	1150	E10-85-026-02-22	A, 18, 20, 66			25	25					F11-85-012-03-VA	F11-79-008-01-HA	T
ALTEA (5P1)																
Pro-Kit (Performance Fahrwerksfedern | *Performance Springs*)																
1.2 TSI, 1.4 16V, 1.4 TSI, 1.6, 2.0 FSI	03.04 -	1022	998	E10-81-007-01-22	A, 18, 20			30	30					F11-15-007-01-VA	F11-85-014-05-HA	T
1.6 TDI, 1.8 TFSI, 1.9 TDI, 2.0 FSI, 2.0 TDI, 2.0 TDI 16V, 2.0 TFSI	03.04 -	1120	998	E10-81-007-02-22	A, 18, 20			30	30					F11-15-007-03-VA	F11-85-014-05-HA	T
Anti-Roll-Kit (Performance Stabilisatoren | *Performance Sway Bars*)																
1.2 TSI, 1.4 16V, 1.4 TSI, 1.6, 1.6 TDI, 1.8 TFSI, 1.9 TDI, 2.0 FSI, 2.0 TDI, 2.0 TDI 16V, 2.0 TFSI	03.04 -			E40-85-014-06-11	A, 18, 20, 22, 45					26	23	2-fach verstellbar *2-way adjustable*	2-fach verstellbar *2-way adjustable*	AS41-85-014-01-VA	AS41-85-014-01-HA	T
B12 Pro-Kit (Performance Komplettfahrwerke | *Performance Springs+Shocks*)																
1.4 TSI, 1.6, 2.0 FSI	03.04 -	1022	998	E90-81-007-02-22	A, 18, 20, 34, 78, 161			30	30					F11-15-007-01-VA	F11-85-014-05-HA	T
1.4 TSI, 1.6, 2.0 FSI	03.04 -	1022	998	E90-81-007-01-22	A, 18, 20, 35, 78, 161			30	30					F11-15-007-01-VA	F11-85-014-05-HA	T
1.6 TDI, 1.8 TFSI, 1.9 TDI, 2.0 FSI, 2.0 TDI, 2.0 TDI 16V, 2.0 TFSI	03.04 -	1120	998	E90-81-007-04-22	A, 18, 20, 34, 78, 161			30	30					F11-15-007-03-VA	F11-85-014-05-HA	T
1.6 TDI, 1.8 TFSI, 1.9 TDI, 2.0 FSI, 2.0 TDI, 2.0 TDI 16V, 2.0 TFSI	03.04 -	1120	998	E90-81-007-03-22	A, 18, 20, 35, 78, 161			30	30					F11-15-007-03-VA	F11-85-014-05-HA	T
Pro-Street-S (Gewindefahrwerke - höhenverstellbar | *Coil-Overs-Adjustable Ride Hight*)																
1.2 TSI, 1.4 16V, 1.4 TSI, 1.6, 1.6 TDI, 1.8 TFSI, 1.9 TDI, 2.0 FSI, 2.0 TDI, 2.0 TDI 16V, 2.0 TFSI	03.04 -	1035	1150	PSS65-85-014-01-22	A, 20, 24, 34, 45, 101, 160			20-45	30-60							T
1.2 TSI, 1.4 16V, 1.4 TSI, 1.6, 1.6 TDI, 1.8 TFSI, 1.9 TDI, 2.0 FSI, 2.0 TDI, 2.0 TDI 16V, 2.0 TFSI	03.04 -	1035	1150	PSS65-85-014-02-22	A, 20, 24, 35, 45, 101, 160			20-45	30-60							T
1.2 TSI, 1.4 16V, 1.4 TSI, 1.6, 1.6 TDI, 1.8 TFSI, 1.9 TDI, 2.0 FSI, 2.0 TDI, 2.0 TDI 16V, 2.0 TFSI	03.04 -	1105	1150	PSS65-85-014-03-22	A, 20, 24, 34, 45, 101, 160			20-45	30-60							T
1.2 TSI, 1.4 16V, 1.4 TSI, 1.6, 1.6 TDI, 1.8 TFSI, 1.9 TDI, 2.0 FSI, 2.0 TDI, 2.0 TDI 16V, 2.0 TFSI	03.04 -	1105	1150	PSS65-85-014-04-22	A, 20, 24, 35, 45, 101, 160			20-45	30-60							T
1.2 TSI, 1.4 16V, 1.4 TSI, 1.6, 1.6 TDI, 1.8 TFSI, 1.9 TDI, 2.0 FSI, 2.0 TDI, 2.0 TDI 16V, 2.0 TFSI	03.04 -	1170	1150	PSS65-85-014-05-22	A, 20, 24, 34, 45, 101, 160			20-45	30-60							T
1.2 TSI, 1.4 16V, 1.4 TSI, 1.6, 1.6 TDI, 1.8 TFSI, 1.9 TDI, 2.0 FSI, 2.0 TDI, 2.0 TDI 16V, 2.0 TFSI	03.04 -	1170	1150	PSS65-85-014-06-22	A, 20, 24, 35, 45, 101, 160			20-45	30-60							T
ALTEA XL (5P5, 5P8)																
Pro-Kit (Performance Fahrwerksfedern | *Performance Springs*)																
1.2 TSI, 1.4 16V, 1.4 TSI, 1.6, 1.6 Multifuel, 2.0 FSI	10.06 -	1022	1050	E10-81-007-05-22	A, 18, 20			30	30					F11-15-007-01-VA	F11-15-007-01-HA	T
1.6 TDI, 1.8 TFSI, 1.9 TDI, 2.0 FSI, 2.0 TDI, 2.0 TDI 16V	10.06 -	1120	1050	E10-81-007-06-22	A, 18, 20			30	30					F11-15-007-03-VA	F11-15-007-01-HA	T
Anti-Roll-Kit (Performance Stabilisatoren | *Performance Sway Bars*)																
1.2 TSI, 1.4 16V, 1.4 TSI, 1.6, 1.6 Multifuel, 1.6 TDI, 1.8 TFSI, 1.9 TDI, 2.0 FSI, 2.0 TDI, 2.0 TDI 16V	10.06 -			E40-85-014-06-11	A, 18, 20, 22, 45					26	23	2-fach verstellbar *2-way adjustable*	2-fach verstellbar *2-way adjustable*	AS41-85-014-01-VA	AS41-85-014-01-HA	T
B12 Pro-Kit (Performance Komplettfahrwerke | *Performance Springs+Shocks*)																
1.2 TSI, 1.4 16V, 1.4 TSI, 1.6, 1.6 Multifuel, 2.0 FSI	10.06 -	1022	1050	E90-81-007-05-22	A, 18, 20, 34, 78, 161			30	30					F11-15-007-01-VA	F11-15-007-01-HA	T
1.6 TDI, 1.8 TFSI, 1.9 TDI, 2.0 FSI, 2.0 TDI, 2.0 TDI 16V	10.06 -	1120	1050	E90-81-007-06-22	A, 18, 20, 34, 78, 161			30	30					F11-15-007-03-VA	F11-15-007-01-HA	T
Pro-Street-S (Gewindefahrwerke - höhenverstellbar | *Coil-Overs-Adjustable Ride Hight*)																
1.2 TSI, 1.4 16V, 1.4 TSI, 1.6, 1.6 Multifuel, 1.6 TDI, 1.8 TFSI, 1.9 TDI, 2.0 FSI, 2.0 TDI, 2.0 TDI 16V, 2.0 TFSI	10.06 -	1035	1150	PSS65-85-014-01-22	A, 20, 24, 34, 45, 101, 160			20-45	30-60							T
1.2 TSI, 1.4 16V, 1.4 TSI, 1.6, 1.6 Multifuel, 1.6 TDI, 1.8 TFSI, 1.9 TDI, 2.0 FSI, 2.0 TDI, 2.0 TDI 16V	10.06 -	1035	1150	PSS65-85-014-02-22	A, 20, 24, 35, 45, 101, 160			20-45	30-60							T
1.2 TSI, 1.4 16V, 1.4 TSI, 1.6, 1.6 Multifuel, 1.6 TDI, 1.8 TFSI, 1.9 TDI, 2.0 FSI, 2.0 TDI, 2.0 TDI 16V, 2.0 TFSI	10.06 -	1105	1150	PSS65-85-014-03-22	A, 20, 24, 34, 45, 101, 160			20-45	30-60							T
1.2 TSI, 1.4 16V, 1.4 TSI, 1.6, 1.6 Multifuel, 1.6 TDI, 1.8 TFSI, 1.9 TDI, 2.0 FSI, 2.0 TDI, 2.0 TDI 16V	10.06 -	1105	1150	PSS65-85-014-04-22	A, 20, 24, 35, 45, 101, 160			20-45	30-60							T
1.2 TSI, 1.4 16V, 1.4 TSI, 1.6, 1.6 Multifuel, 1.6 TDI, 1.8 TFSI, 1.9 TDI, 2.0 FSI, 2.0 TDI, 2.0 TDI 16V, 2.0 TFSI	10.06 -	1170	1150	PSS65-85-014-05-22	A, 20, 24, 34, 45, 101, 160			20-45	30-60							T
1.2 TSI, 1.4 16V, 1.4 TSI, 1.6, 1.6 Multifuel, 1.6 TDI, 1.8 TFSI, 1.9 TDI, 2.0 FSI, 2.0 TDI, 2.0 TDI 16V	10.06 -	1170	1150	PSS65-85-014-06-22	A, 20, 24, 35, 45, 101, 160			20-45	30-60							T
2.0 TDI 16V 4x4 für Fahrzeuge ohne Niveauregulierung, 2.0 TDI 4x4 für Fahrzeuge ohne Niveauregulierung, 2.0 TFSI 4x4 für Fahrzeuge ohne Niveauregulierung *2.0 TDI 16V 4x4 for vehicles without ride height control, 2.0 TDI 4x4 for vehicles without ride height control, 2.0 TFSI 4x4 for vehicles without ride height control*	06.07 -	1180	1230	PSS65-85-016-04-22	A, 18, 24, 45, 160			35-70	35-70							T
AROSA (6H)																
Pro-Kit (Performance Fahrwerksfedern | *Performance Springs*)																
1.0, 1.4, 1.4 16V, 1.4 TDI, 1.7 SDI	05.97 - 06.04	810	690	E8111-140	A, 18, 20			30	20-25					F8546001	F8111002	T
B12 Pro-Kit (Performance Komplettfahrwerke | *Performance Springs+Shocks*)																
1.0, 1.4, 1.4 16V, 1.4 TDI, 1.7 SDI	05.97 - 06.04	810	690	E90-81-013-01-22	A, 18, 20, 78, 161			30	20-25					F8546001	F8111002	T
CORDOBA (6K1, 6K2)																
Pro-Kit (Performance Fahrwerksfedern | *Performance Springs*)																
1.0 i, 1.4, 1.4 i, 1.4 i 16V, 1.6 i, 1.8 i, 1.8 i 16V, 2.0 i, 2.0 i 16V	02.93 - 10.99	865	810	E8109-140	A, 18, 20			30	20-25					F8502001	F8106002	T
1.7 SDI, 1.9 D, 1.9 SDI, 1.9 TD, 1.9 TDI	02.93 - 06.99	900	810	E8117-140	A, 18, 20			30	20-25					F8530001	F8106002	T

SEAT

Modell *Model*	Baujahr *Year*	Achslast Vorne kg *Front Axle Load kg*	Achslast Hinten kg *Rear Axle Load kg*	Artikel-Nr. *Part-No.*	Hinweise *Notes*	ab Nachtrag ...xx BE *from suppl. ...xx of type approval*	bis Nachtrag ...xx BE *to suppl. ...xx of type approval*	ca. Tieferl. Vorne mm *ca. Lowering Front mm*	ca. Tieferl. Hinten mm *ca. Lowering Rear mm*	Ø Vorne mm *Ø Front mm*	Ø Hinten mm *Ø Rear mm*	Verstellbarkeit Vorne *Adjustable Front*	Verstellbarkeit Hinten *Adjustable Rear*	Ersatzteilbez. Vorne *Spare Part Marking Front*	Ersatzteilbez. Hinten *Spare Part Marking Rear*	Gutachten *Homologation*
CORDOBA (6K2)																
Pro-Kit (Performance Fahrwerksfedern | *Performance Springs*)																
1.0, 1.4, 1.4 16V, 1.6	06.99 - 10.02	850	810	E10-81-002-01-22	A, 18, 20			30	20-25					F11-81-001-01-VA	F8106002	T
1.9 SDI, 1.9 TDI	06.99 - 10.02	900	810	E10-81-002-02-22	A, 18, 20			30	20-25					F8594001	F8106002	T
CORDOBA (6L2)																
Pro-Kit (Performance Fahrwerksfedern | *Performance Springs*)																
1.2, 1.2 12V, 1.4 16V, 1.6, 1.6 16V	09.02 - 11.09	860	860	E10-81-006-01-22	A, 18, 20			30	20-25					F11-81-005-01-VA	F11-85-008-01-HA	T
1.4 TDI, 1.9 SDI, 1.9 TDI	09.02 - 11.09	960	860	E10-81-006-02-22	A, 18, 20			30	20-25					F11-85-008-01-VA	F11-85-008-01-HA	T
Anti-Roll-Kit (Performance Stabilisatoren | *Performance Sway Bars*)																
1.2, 1.2 12V, 1.4 16V, 1.4 TDI, 1.6, 1.6 16V, 1.9 SDI, 1.9 TDI	09.02 - 11.09			E40-85-008-01-10	A, 18, 20, 22, 45					22		nicht verstellbar *not adjustable*		AS41-85-008-01-VA		T
Pro-Street-S (Gewindefahrwerke - höhenverstellbar | *Coil-Overs-Adjustable Ride Hight*)																
1.2, 1.2 12V, 1.4 16V, 1.4 TDI, 1.6, 1.6 16V, 1.9 SDI, 1.9 TDI	09.02 - 11.09	955	840	PSS65-85-008-01-22	A, 24, 25, 45, 160			35-65	35-65							T
EXEO (3R2)																
Pro-Kit (Performance Fahrwerksfedern | *Performance Springs*)																
1.6, 1.8 T, 1.8 TSI, 2.0 TFSI	12.08 -	1090	1135	E10-81-011-03-22	A, 18, 20			30-35	25-30					F11-15-003-01-VA	F11-15-003-03-HA	T
2.0 TDI, 2.0 TFSI	12.08 -	1165	1135	E10-81-011-04-22	A, 18, 20			30-35	25-30					F1568001	F11-15-003-03-HA	T
Sportline (Performance Fahrwerksfedern Sport | *Sport Performance Springs*)																
1.6, 1.8 T, 1.8 TSI, 2.0 TFSI	12.08 -	1090	1135	E20-15-003-04-22	A, 18, 20			45	30					F21-15-003-02-VA	F21-15-003-04-HA	T
2.0 TDI, 2.0 TFSI	12.08 -	1140	1135	E20-15-003-05-22	A, 18, 20			45	30					F21-15-003-03-VA	F21-15-003-04-HA	T
Anti-Roll-Kit (Performance Stabilisatoren | *Performance Sway Bars*)																
1.6, 1.8 T, 1.8 TSI, 2.0 TDI, 2.0 TFSI	12.08 -			E40-15-003-01-11	A, 18, 22, 45					32	24	nicht verstellbar *not adjustable*	2-fach verstellbar *2-way adjustable*	AS41-15-003-01-VA	AS41-15-003-01-HA	T
B12 Pro-Kit (Performance Komplettfahrwerke | *Performance Springs+Shocks*)																
1.6, 1.8 T, 1.8 TSI, 2.0 TFSI	12.08 -	1090	1135	E90-81-011-01-22	A, 18, 20, 78, 161			30-35	25-30					F11-15-003-01-VA	F11-15-003-03-HA	T
2.0 TDI, 2.0 TFSI	12.08 -	1165	1135	E90-81-011-02-22	A, 18, 20, 78, 161			30-35	25-30					F1568001	F11-15-003-03-HA	T
B12 Sportline (Performance Komplettfahrwerke Sport | *Sport Performance Springs+Shocks*)																
1.6, 1.8 T, 1.8 TSI, 2.0 TFSI	12.08 -	1090	1135	E95-15-006-06-22	A, 18, 20, 78, 161			45	30					F21-15-003-02-VA	F21-15-003-04-HA	T
2.0 TDI, 2.0 TFSI	12.08 -	1140	1135	E95-15-006-08-22	A, 18, 20, 78, 161			45	30					F21-15-003-03-VA	F21-15-003-04-HA	T
EXEO ST (3R5)																
Pro-Kit (Performance Fahrwerksfedern | *Performance Springs*)																
1.6, 1.8 T, 1.8 TSI, 2.0 TFSI	06.09 -	1090	1135	E10-81-011-03-22	A, 18, 20			30	30					F11-15-003-01-VA	F11-15-003-03-HA	T
2.0 TDI, 2.0 TFSI	05.09 -	1165	1135	E10-81-011-04-22	A, 18, 20			30	30					F1568001	F11-15-003-03-HA	T
Sportline (Performance Fahrwerksfedern Sport | *Sport Performance Springs*)																
1.6, 1.8 T, 1.8 TSI, 2.0 TFSI	06.09 -	1090	1135	E20-15-003-04-22	A, 18, 20			45	40					F21-15-003-02-VA	F21-15-003-04-HA	T
2.0 TDI, 2.0 TFSI	05.09 -	1140	1135	E20-15-003-05-22	A, 18, 20			45	40					F21-15-003-03-VA	F21-15-003-04-HA	T
Anti-Roll-Kit (Performance Stabilisatoren | *Performance Sway Bars*)																
1.6, 1.8 T, 1.8 TSI, 2.0 TDI, 2.0 TFSI	05.09 -			E40-15-003-01-11	A, 18, 22, 45					32	24	nicht verstellbar *not adjustable*	2-fach verstellbar *2-way adjustable*	AS41-15-003-01-VA	AS41-15-003-01-HA	T
B12 Pro-Kit (Performance Komplettfahrwerke | *Performance Springs+Shocks*)																
1.6, 1.8 T, 1.8 TSI, 2.0 TFSI	06.09 -	1090	1130	E90-81-011-01-22	A, 18, 20, 78, 161			30	30					F11-15-003-01-VA	F11-15-003-03-HA	T
2.0 TDI, 2.0 TFSI	05.09 -	1165	1130	E90-81-011-02-22	A, 18, 20, 78, 161			30	30					F1568001	F11-15-003-03-HA	T
B12 Sportline (Performance Komplettfahrwerke Sport | *Sport Performance Springs+Shocks*)																
1.6, 1.8 T, 1.8 TSI, 2.0 TFSI	06.09 -	1090	1135	E95-15-006-06-22	A, 18, 20, 78, 161			45	40					F21-15-003-02-VA	F21-15-003-04-HA	T
2.0 TDI, 2.0 TFSI	05.09 -	1140	1135	E95-15-006-08-22	A, 18, 20, 78, 161			45	40					F21-15-003-03-VA	F21-15-003-04-HA	T
IBIZA II (6K1)																
Pro-Kit (Performance Fahrwerksfedern | *Performance Springs*)																
1.0, 1.0 i, 1.3 i, 1.4, 1.4 i, 1.4 i 16V, 1.6 i, 1.8 i, 1.8 i 16V, 2.0 i, 2.0 i 16V	03.93 - 08.99	865	810	E8108-140	A, 18, 20			30	20-25					F8502001	F8105002	T
1.9 D, 1.9 SDI, 1.9 TD, 1.9 TDI	03.93 - 08.99	900	810	E8116-140	A, 18, 20			30	20-25					F8530001	F8105002	T
IBIZA III (6K1)																
Pro-Kit (Performance Fahrwerksfedern | *Performance Springs*)																
1.8 T 20V Cupra, 1.9 SDI, 1.9 TDI	08.99 - 02.02	900	810	E10-81-001-02-22	A, 18, 20			25	20-25					F11-81-001-01-VA	F8106002	T
B12 Pro-Kit (Performance Komplettfahrwerke | *Performance Springs+Shocks*)																
1.8 T 20V Cupra, 1.9 SDI, 1.9 TDI	08.99 - 02.02	900	810	E90-81-001-02-22	A, 18, 20, 78, 161			25	20-25					F11-81-001-01-VA	F8106002	T
IBIZA IV (6L1)																
Pro-Kit (Performance Fahrwerksfedern | *Performance Springs*)																
1.2, 1.2 12V, 1.4 16V, 1.6, 1.6 16V	02.02 - 11.09	860	860	E10-81-005-01-22	A, 18, 20			30	20-25					F11-81-005-01-VA	F11-85-008-01-HA	T
1.4 TDI, 1.8 T Cupra R, 1.8 T FR, 1.9 SDI, 1.9 TDI	02.02 - 11.09	960	860	E10-81-005-02-22	A, 18, 20			30	20-25					F11-85-008-01-VA	F11-85-008-01-HA	T
Anti-Roll-Kit (Performance Stabilisatoren | *Performance Sway Bars*)																
1.2, 1.2 12V, 1.4 16V, 1.4 TDI, 1.6, 1.6 16V, 1.9 SDI, 1.9 TDI	02.02 - 11.09			E40-85-008-01-10	A, 18, 20, 22, 45					22		nicht verstellbar *not adjustable*		AS41-85-008-01-VA		T
B12 Pro-Kit (Performance Komplettfahrwerke | *Performance Springs+Shocks*)																
1.2, 1.2 12V, 1.4 16V, 1.6, 1.6 16V	02.02 - 11.09	860	860	E90-81-005-01-22	A, 18, 20, 78, 161			30	20-25					F11-81-005-01-VA	F11-85-008-01-HA	T
1.4 TDI, 1.8 T FR, 1.9 SDI, 1.9 TDI	02.02 - 11.09	960	860	E90-81-005-02-22	A, 18, 20, 78, 161			30	20-25					F11-85-008-01-VA	F11-85-008-01-HA	T
Pro-Street-S (Gewindefahrwerke - höhenverstellbar | *Coil-Overs-Adjustable Ride Hight*)																
1.2, 1.2 12V, 1.4 16V, 1.4 TDI, 1.9 SDI, 1.9 TDI	02.02 - 11.09	955	840	PSS65-85-008-01-22	A, 24, 25, 45, 160			35-65	35-65							T

SEAT

Modell	Baujahr	Achslast Vorne kg	Achslast Hinten kg	Artikel-Nr.	Hinweise	ab Nachtrag ...xx BE	bis Nachtrag ...xx BE	ca. Tieferl. Vorne mm	ca. Tieferl. Hinten mm	Ø Vorne mm	Ø Hinten mm	Verstellbarkeit Vorne	Verstellbarkeit Hinten	Ersatzteilbez. Vorne	Ersatzteilbez. Hinten	Gutachten
Model	*Year*	*Front Axle Load kg*	*Rear Axle Load kg*	*Part-No.*	*Notes*	*from suppl. ...xx of type approval*	*to suppl. ...xx of type approval*	*ca. Lowering Front mm*	*ca. Lowering Rear mm*	*Ø Front mm*	*Ø Rear mm*	*Adjustable Front*	*Adjustable Rear*	*Spare Part Marking Front*	*Spare Part Marking Rear*	*Homologation*
IBIZA V (6J5)																
Pro-Kit (Performance Fahrwerksfedern | *Performance Springs*)																
1.0, 1.0 TSI, 1.2, 1.2 TSI, 1.2 TDI, 1.4, 1.6, 1.6 TDI	03.08 -	860	840	E10-81-010-04-22	A, 18, 20			25	25					F11-81-010-04-VA	F11-81-010-04-HA	T
1.0, 1.0 TSI, 1.2 TSI, 1.2 TDI, 1.4 TSI, 1.6, 1.4 TDI, 1.6 TDI, 1.9 TDI, 2.0 TDI	03.08 -	960	840	E10-81-010-05-22	A, 18, 20			25	25					F11-81-010-05-VA	F11-81-010-04-HA	T
Anti-Roll-Kit (Performance Stabilisatoren | *Performance Sway Bars*)																
1.0, 1.0 TSI, 1.2, 1.2 TSI, 1.2 TDI, 1.4, 1.4 TDI, 1.6, 1.6 TDI, 1.9 TDI, 2.0 TDI	03.08 -			E40-85-008-01-10	A, 18, 20, 22, 45					22		nicht verstellbar		AS41-85-008-01-VA		T
B12 Pro-Kit (Performance Komplettfahrwerke | *Performance Springs+Shocks*)																
1.0, 1.0 TSI, 1.2, 1.2 TSI, 1.2 TDI, 1.4, 1.6, 1.6 TDI	03.08 -	860	840	E90-81-010-01-22	A, 18, 20, 78, 161			25	25					F11-81-010-04-VA	F11-81-010-04-HA	T
1.0, 1.0 TSI, 1.2 TSI, 1.2 TDI, 1.4 TSI, 1.6, 1.4 TDI, 1.6 TDI, 1.9 TDI, 2.0 TDI	03.08 -	960	840	E90-81-010-02-22	A, 18, 20, 78, 161			25	25					F11-81-010-05-VA	F11-81-010-04-HA	T
Pro-Street-S (Gewindefahrwerke - höhenverstellbar | *Coil-Overs-Adjustable Ride Hight*)																
1.0, 1.0 TSI, 1.2, 1.2 TSI, 1.2 TDI, 1.4, 1.6, 1.6 TDI	03.08 -	860	800	PSS65-81-010-01-22	A, 24, 25, 45, 160			30-60	25-50							T
1.0, 1.0 TSI, 1.2 TSI, 1.2 TDI, 1.4 TSI, 1.6, 1.4 TDI, 1.6 TDI, 1.9 TDI, 2.0 TDI	03.08 -	950	800	PSS65-81-010-02-22	A, 24, 25, 45, 160			30-60	25-50							T
IBIZA V SPORTCOUPE (6J1)																
Pro-Kit (Performance Fahrwerksfedern | *Performance Springs*)																
1.0, 1.0 TSI, 1.2, 1.2 TSI, 1.2 TDI, 1.4, 1.4 TSI, 1.4 TDI, 1.6, 1.6 TDI	07.08 -	860	840	E10-81-010-04-22	A, 18, 20			25	25					F11-81-010-04-VA	F11-81-010-04-HA	T
1.0, 1.0 TSI, 1.2 TSI, 1.2 TDI, 1.4 TSI, 1.4 TSI Cupra, 1.6, 1.4 TDI, 1.6 TDI, 1.9 TDI, 2.0 TDI	07.08 -	960	840	E10-81-010-05-22	A, 18, 20			25	25					F11-81-010-05-VA	F11-81-010-04-HA	T
Anti-Roll-Kit (Performance Stabilisatoren | *Performance Sway Bars*)																
1.0, 1.0 TSI, 1.2, 1.2 TSI, 1.2 TDI, 1.4, 1.4 TSI, 1.4 TSI Cupra, 1.4 TDI, 1.6, 1.6 TDI, 1.9 TDI, 2.0 TDI	07.08 -			E40-85-008-01-10	A, 18, 20, 22, 45					22		nicht verstellbar *not adjustable*		AS41-85-008-01-VA		T
B12 Pro-Kit (Performance Komplettfahrwerke | *Performance Springs+Shocks*)																
1.0, 1.0 TSI, 1.2, 1.2 TSI, 1.2 TDI, 1.4, 1.4 TSI, 1.4 TDI, 1.6, 1.6 TDI	05.09 -	860	840	E90-81-010-01-22	A, 18, 20, 78, 161			25	25					F11-81-010-04-VA	F11-81-010-04-HA	T
1.0, 1.0 TSI, 1.2 TSI, 1.2 TDI, 1.4 TSI, 1.4 TSI Cupra, 1.6, 1.4 TDI, 1.6 TDI, 1.9 TDI, 2.0 TDI	01.10 -	960	840	E90-81-010-02-22	A, 18, 20, 78, 161			25	25					F11-81-010-05-VA	F11-81-010-04-HA	T
Pro-Street-S (Gewindefahrwerke - höhenverstellbar | *Coil-Overs-Adjustable Ride Hight*)																
1.0, 1.0 TSI, 1.2, 1.2 TSI, 1.2 TDI, 1.4, 1.4 TSI, 1.4 TDI, 1.6, 1.6 TDI	07.08 -	860	800	PSS65-81-010-01-22	A, 24, 25, 45, 160			30-60	25-50							T
1.0, 1.0 TSI, 1.2 TDI, 1.4 TSI, 1.6, 1.4 TDI, 1.6 TDI, 1.9 TDI, 2.0, 2.0 TDI	07.08 -	950	800	PSS65-81-010-02-22	A, 24, 25, 45, 160			30-60	25-50							T
IBIZA V ST (6J8)																
Pro-Kit (Performance Fahrwerksfedern | *Performance Springs*)																
1.0, 1.0 TSI, 1.2, 1.2 TSI, 1.2 TDI, 1.4, 1.4 TSI, 1.6, 1.4 TDI, 1.6 TDI	03.10 -	860	840	E10-81-010-04-22	A, 18, 20			25	30					F11-81-010-04-VA	F11-81-010-04-HA	T
1.0, 1.0 TSI, 1.2, 1.2 TSI, 1.2 TDI, 1.4, 1.4 TSI, 1.6, 1.4 TDI, 1.6 TDI	03.10 -	960	840	E10-81-010-05-22	A, 18, 20			25	30					F11-81-010-05-VA	F11-81-010-04-HA	T
Anti-Roll-Kit (Performance Stabilisatoren | *Performance Sway Bars*)																
1.0, 1.0 TSI, 1.2, 1.2 TSI, 1.2 TDI, 1.4, 1.4 TSI, 1.6, 1.4 TDI, 1.6 TDI	03.10 -			E40-85-008-01-10	A, 18, 20, 22, 45					22		nicht verstellbar *not adjustable*		AS41-85-008-01-VA		T
B12 Pro-Kit (Performance Komplettfahrwerke | *Performance Springs+Shocks*)																
1.0, 1.0 TSI, 1.2, 1.2 TSI, 1.2 TDI, 1.4, 1.4 TSI, 1.6, 1.4 TDI, 1.6 TDI	03.10 -	860	840	E90-81-010-01-22	A, 18, 20, 78, 161			25	30					F11-81-010-04-VA	F11-81-010-04-HA	T
1.0, 1.0 TSI, 1.2, 1.2 TSI, 1.2 TDI, 1.4, 1.4 TSI, 1.6, 1.4 TDI, 1.6 TDI	03.10 -	940	840	E90-81-010-02-22	A, 18, 20, 78, 161			25	30					F11-81-010-05-VA	F11-81-010-04-HA	T
Pro-Street-S (Gewindefahrwerke - höhenverstellbar | *Coil-Overs-Adjustable Ride Hight*)																
1.0, 1.0 TSI, 1.2, 1.2 TSI, 1.2 TDI, 1.4, 1.4 TSI, 1.4 TDI, 1.6, 1.6 TDI	03.10 -	860	800	PSS65-81-010-01-22	A, 24, 25, 45, 160			30-60	25-50							T
1.0, 1.0 TSI, 1.2, 1.2 TSI, 1.2 TDI, 1.4, 1.4 TSI, 1.4 TDI, 1.6, 1.6 TDI	03.10 -	950	800	PSS65-81-010-02-22	A, 24, 25, 45, 160			30-60	25-50							T
LEON (1M1)																
Pro-Kit (Performance Fahrwerksfedern | *Performance Springs*)																
1.4 16V, 1.6, 1.6 16 V	11.99 - 06.06	910	985	E8119-140	A, 18, 20			30	20-25					F8560001	F1540002	T
1.8 20V, 1.8 20V T, 1.8 T Cupra R, 1.9 SDI, 1.9 TDI	11.99 - 06.06	982	985	E8120-140	A, 18, 20, 26			30	20-25					F1540001	F1540002	T
1.9 SDI, 1.9 TDI	11.99 - 06.06	1005	985	E8121-140	A, 18, 20, 26			30	20-25					F1545001	F1540002	T
1.9 TDI Syncro, 2.8 Cupra 4	02.01 - 06.06	1050	1070	E10-81-003-02-22	A, 18			20-25	20					F8592001	F11-15-001-02-HA	T
Sportline (Performance Fahrwerksfedern Sport | *Sport Performance Springs*)																
1.4 16V, 1.6, 1.6 16 V	11.99 - 06.06	950	1000	E20-81-003-01-22	A, 20, 26			45-50	30					F21-85-001-01-VA	F21-85-001-01-HA	T
1.8 20V, 1.8 20V T, 1.8 T Cupra R, 1.9 SDI, 1.9 TDI	11.99 - 06.06	1000	1000	E20-81-003-02-22	A, 20, 26			45-50	30					F21-85-003-01-VA	F21-85-001-01-HA	T
Anti-Roll-Kit (Performance Stabilisatoren | *Performance Sway Bars*)																
1.4 16V, 1.6, 1.6 16 V, 1.8 20V, 1.8 20V T, 1.9 SDI, 1.9 TDI	11.99 - 06.06			E40-85-005-01-10	A, 18, 20, 22, 45					25		nicht verstellbar *not adjustable*		AS41-85-005-01-VA		T
1.4 16V, 1.6, 1.6 16 V, 1.8 20V, 1.8 20V T, 1.9 SDI, 1.9 TDI	11.99 - 06.06			E40-85-005-01-11	A, 18, 20, 22, 45					25	25	nicht verstellbar *not adjustable*	nicht verstellbar *not adjustable*	AS41-85-005-01-VA	AS1540320HA	T
B12 Pro-Kit (Performance Komplettfahrwerke | *Performance Springs+Shocks*)																
1.4 16V, 1.6, 1.6 16 V	11.99 - 06.06	910	985	E90-81-003-01-22	A, 18, 20, 78, 161			30	20-25					F8560001	F1540002	T
1.8 20V, 1.8 20V T, 1.9 SDI, 1.9 TDI	11.99 - 06.06	982	985	E90-81-003-02-22	A, 18, 20, 26, 78, 161			30	20-25					F1540001	F1540002	T
1.8 T Cupra R	02.02 - 06.06	982	985	E90-81-003-03-22	A, 18, 20, 26, 78, 161			30	20-25					F1540001	F1540002	T
1.9 SDI, 1.9 TDI	11.99 - 06.06	1005	985	E90-81-003-04-22	A, 18, 20, 78, 161			30	20-25					F1545001	F1540002	T
1.9 TDI Syncro, 2.8 Cupra 4	02.01 - 06.06	1050	1070	E90-81-003-05-22	A, 18, 78, 161			20-25	20					F8592001	F11-15-001-02-HA	T
B12 Sportline (Performance Komplettfahrwerke Sport | *Sport Performance Springs+Shocks*)																
1.4 16V, 1.6, 1.6 16 V	11.99 - 06.06	950	1000	E95-81-003-01-22	A, 18, 20, 78, 161			45-50	30					F21-85-001-01-VA	F21-85-001-01-HA	T
1.8 20V, 1.8 20V T, 1.9 SDI, 1.9 TDI	11.99 - 06.06	1000	1000	E95-81-003-02-22	A, 18, 20, 26, 78, 161			45-50	30					F21-85-003-01-VA	F21-85-001-01-HA	T
1.8 T Cupra R	02.02 - 06.06	1000	1000	E95-81-003-03-22	A, 18, 20, 26, 78, 161			25-30	10					F21-85-003-01-VA	F21-85-001-01-HA	T

SEAT

Modell *Model*	Baujahr *Year*	Achslast Vorne kg *Front Axle Load kg*	Achslast Hinten kg *Rear Axle Load kg*	Artikel-Nr. *Part-No.*	Hinweise *Notes*	ab Nachtrag ...xx BE *from suppl. ...xx of type approval*	bis Nachtrag ...xx BE *to suppl. ...xx of type approval*	ca. Tieferl. Vorne mm *ca. Lowering Front mm*	ca. Tieferl. Hinten mm *ca. Lowering Rear mm*	Ø Vorne mm *Ø Front mm*	Ø Hinten mm *Ø Rear mm*	Verstellbarkeit Vorne *Adjustable Front*	Verstellbarkeit Hinten *Adjustable Rear*	Ersatzteilbez. Vorne *Spare Part Marking Front*	Ersatzteilbez. Hinten *Spare Part Marking Rear*	Gutachten *Homologation*
LEON (1M1)																
Pro-Street-S (Gewindefahrwerke - höhenverstellbar | *Coil-Overs-Adjustable Ride Hight*)																
1.4 16V, 1.6, 1.6 16 V, 1.8 20V, 1.8 20V T, 1.8 T Cupra R, 1.9 SDI, 1.9 TDI	11.99 - 06.06	1030	1025	PSS65-85-001-01-22	A, 20, 24, 25, 26, 45, 160			35-65	35-65							T
1.8 20V T 4, 1.9 TDI Syncro	11.99 - 06.06	1030	1020	PSS65-85-001-02-22	A, 24, 25, 45, 160			30-55	30-55							T
2.8 Cupra 4	02.01 - 06.06	1030	1020	PSS65-85-001-05-22	A, 24, 25, 45, 160			30-55	30-55							T
LEON (1P1)																
Pro-Kit (Performance Fahrwerksfedern | *Performance Springs*)																
1.2 TSI, 1.4 16V, 1.4 TSI, 1.6, 1.6 MultiFuel, 1.6 TDI, 1.9 TDI, 1.9 TDi, 2.0 FSI	07.05 -	1022	965	E10-81-009-04-22	A, 18, 20			30	30					F11-15-007-01-VA	F11-85-014-05-HA	T
1.6 TDI, 1.8 TSI, 1.9 TDI, 1.9 TDi, 2.0 FSI, 2.0 TDI, 2.0 TDI 16V	07.05 -	1120	965	E10-81-009-05-22	A, 18, 20			30	30					F11-15-007-03-VA	F11-85-014-05-HA	T
Sportline (Performance Fahrwerksfedern Sport | *Sport Performance Springs*)																
1.2 TSI, 1.4 16V, 1.4 TSI, 1.6, 1.6 MultiFuel, 1.6 TDI, 1.8 TSI, 1.9 TDI, 1.9 TDi, 2.0 FSI	07.05 -	1040	930	E20-81-009-01-22	A, 18, 20			45-50	35					F21-15-007-01-VA	F21-85-014-01-HA	ABE
1.6 TDI, 1.8 TSI, 1.9 TDI, 1.9 TDi, 2.0 FSI, 2.0 TDI, 2.0 TDI 16V, 2.0 TFSI	05.05 -	1130	930	E20-81-009-02-22	A, 18, 20			45-50	35					F21-15-007-02-VA	F21-85-014-01-HA	ABE
2.0 Cupra R, 2.0 TFSI	11.06 -	1130	930	E20-81-009-02-22	A, 18, 20			20	30					F21-15-007-02-VA	F21-85-014-01-HA	ABE
Anti-Roll-Kit (Performance Stabilisatoren | *Performance Sway Bars*)																
1.2 TSI, 1.4 16V, 1.4 TSI, 1.6, 1.6 MultiFuel, 1.6 TDI, 1.8 TSI, 1.9 TDI, 1.9 TDi, 2.0 FSI, 2.0 TDI, 2.0 TDI 16V, 2.0 TFSI	05.05 -			E40-85-014-06-11	A, 18, 20, 22, 45					26	23	2-fach verstellbar *2-way adjustable*	2-fach verstellbar *2-way adjustable*	AS41-85-014-01-VA	AS41-85-014-01-HA	T
B12 Pro-Kit (Performance Komplettfahrwerke | *Performance Springs+Shocks*)																
1.4 16V, 1.4 TSI, 1.6, 1.6 MultiFuel, 1.9 TDI, 2.0 FSI	07.05 -	1022	965	E90-81-009-02-22	A, 18, 20, 34, 78, 161			30	30					F11-15-007-01-VA	F11-85-014-05-HA	T
1.2 TSI, 1.4 16V, 1.4 TSI, 1.6, 1.6 MultiFuel, 1.6 TDI, 1.9 TDI, 2.0 FSI	07.05 -	1022	965	E90-81-009-01-22	A, 18, 20, 35, 78, 161			30	30					F11-15-007-01-VA	F11-85-014-05-HA	T
1.6 TDI, 1.8 TSI, 1.9 TDI, 2.0 FSI, 2.0 TDI, 2.0 TDI 16V, 2.0 TFSI	05.05 -	1120	965	E90-81-009-04-22	A, 18, 20, 34, 78, 161			30	30					F11-15-007-03-VA	F11-85-014-05-HA	T
1.6 TDI, 1.8 TSI, 1.9 TDI, 2.0 FSI, 2.0 TDI, 2.0 TDI 16V, 2.0 TFSI	05.05 -	1120	965	E90-81-009-03-22	A, 18, 20, 35, 78, 161			30	30					F11-15-007-03-VA	F11-85-014-05-HA	T
B12 Sportline (Performance Komplettfahrwerke Sport | *Sport Performance Springs+Shocks*)																
1.4, 1.4 TSI, 1.6, 1.6 MultiFuel, 1.6 TDI, 1.8 TSI, 1.9 TDI, 2.0 FSI	07.05 -	1040	930	E95-81-009-02-22	A, 18, 20, 34, 78, 161			45-50	35					F21-15-007-01-VA	F21-85-014-01-HA	ABE
1.2 TSI, 1.4, 1.4 TSI, 1.6, 1.6 MultiFuel, 1.6 TDI, 1.8 TSI, 1.9 TDI, 2.0 FSI	07.05 -	1040	930	E95-81-009-01-22	A, 18, 20, 35, 78, 161			45-50	35					F21-15-007-01-VA	F21-85-014-01-HA	ABE
1.6 TDI, 1.8 TSI, 1.9 TDI, 2.0 FSI, 2.0 TDI, 2.0 TDI 16V, 2.0 TFSI	05.05 -	1130	930	E95-81-009-04-22	A, 18, 20, 34, 78, 161			45-50	35					F21-15-007-02-VA	F21-85-014-01-HA	ABE
1.6 TDI, 1.8 TSI, 1.9 TDI, 2.0 FSI, 2.0 TDI, 2.0 TDI 16V, 2.0 TFSI	05.05 -	1130	930	E95-81-009-03-22	A, 18, 20, 35, 78, 161			45-50	35					F21-15-007-02-VA	F21-85-014-01-HA	ABE
2.0 Cupra R	09.09 -	1130	930	E95-81-009-04-22	A, 18, 20, 34, 78, 161			20	30					F21-15-007-02-VA	F21-85-014-01-HA	ABE
Pro-Street-S (Gewindefahrwerke - höhenverstellbar | *Coil-Overs-Adjustable Ride Hight*)																
1.2 TSI, 1.4 16V, 1.4 TSI, 1.6, 1.6 MultiFuel, 1.6 TDI, 1.8 TSI, 1.9 TDI, 1.9 TDi, 2.0 Cupra R, 2.0 FSI, 2.0 TDI, 2.0 TDI 16V, 2.0 TFSI	05.05 -	1035	1000	PSS65-81-009-01-22	A, 18, 20, 24, 34, 45, 160			35-65	35-65							T
1.2 TSI, 1.4 16V, 1.4 TSI, 1.6, 1.6 MultiFuel, 1.6 TDI, 1.8 TSI, 1.9 TDI, 1.9 TDi, 2.0 Cupra R, 2.0 FSI, 2.0 TDI, 2.0 TDI 16V, 2.0 TFSI	05.05 -	1035	1000	PSS65-81-009-04-22	A, 18, 20, 24, 35, 45, 160			35-65	35-65							T
1.2 TSI, 1.4 16V, 1.4 TSI, 1.6, 1.6 MultiFuel, 1.6 TDI, 1.8 TSI, 1.9 TDI, 1.9 TDi, 2.0 Cupra R, 2.0 FSI, 2.0 TDI, 2.0 TDI 16V, 2.0 TFSI	05.05 -	1105	1000	PSS65-81-009-02-22	A, 18, 20, 24, 34, 45, 160			35-65	35-65							T
1.2 TSI, 1.4 16V, 1.4 TSI, 1.6, 1.6 MultiFuel, 1.6 TDI, 1.8 TSI, 1.9 TDI, 1.9 TDi, 2.0 Cupra R, 2.0 FSI, 2.0 TDI, 2.0 TDI 16V, 2.0 TFSI	05.05 -	1105	1000	PSS65-81-009-05-22	A, 18, 20, 24, 35, 45, 160			35-65	35-65							T
1.2 TSI, 1.4 16V, 1.4 TSI, 1.6, 1.6 MultiFuel, 1.6 TDI, 1.8 TSI, 1.9 TDI, 1.9 TDi, 2.0 Cupra R, 2.0 FSI, 2.0 TDI, 2.0 TDI 16V, 2.0 TFSI	05.05 -	1170	1000	PSS65-81-009-03-22	A, 18, 20, 24, 34, 45, 160			35-65	35-65							T
1.2 TSI, 1.4 16V, 1.4 TSI, 1.6, 1.6 MultiFuel, 1.6 TDI, 1.8 TSI, 1.9 TDI, 1.9 TDi, 2.0 Cupra R, 2.0 FSI, 2.0 TDI, 2.0 TDI 16V, 2.0 TFSI	05.05 -	1170	1000	PSS65-81-009-06-22	A, 18, 20, 24, 35, 45, 160			35-65	35-65							T
LEON (5F1)																
Pro-Kit (Performance Fahrwerksfedern | *Performance Springs*)																
1.0 TSI, 1.2 TSI, 1.4 TSI, 1.8 TSI, 1.6 TDI, 2.0 TDI	09.12 -	985	1000	E10-15-021-01-22	A, 18, 20, 170			35	30					F11-15-021-01-VA	F11-15-021-01-HA	T
1.8 TSI, 1.6 TDI, 2.0 TDI	09.12 -	1070	1000	E10-15-021-02-22	A, 18, 20, 170			35	30					F11-15-021-02-VA	F11-15-021-01-HA	T
2.0 Cupra	10.13 -	1070	1000	E10-15-021-02-22	A, 18, 20, 170			15	10					F11-15-021-02-VA	F11-15-021-01-HA	T
1.0 TSI, 1.2 TSI, 1.4 TSI, 1.8 TSI, 1.6 TDI, 2.0 TDI	09.12 -	985	990	E10-15-021-03-22	A, 18, 20, 171			35	30					F11-15-021-01-VA	F1540002	T
1.8 TSI, 1.6 TDI, 2.0 TDI	09.12 -	1070	990	E10-15-021-04-22	A, 18, 20, 171			35	30					F11-15-021-02-VA	F1540002	T
Sportline (Performance Fahrwerksfedern Sport | *Sport Performance Springs*)																
1.0 TSI, 1.2 TSI, 1.4 TSI, 1.8 TSI, 1.6 TDI, 2.0 TDI	09.12 -	970	1070	E20-15-021-01-22	A, 18, 20, 170			45	40					F21-15-021-01-VA	F21-15-021-01-HA	T
1.8 TSI, 1.6 TDI, 2.0 TDI	09.12 -	1070	1070	E20-15-021-02-22	A, 18, 20, 170			45	40					F21-15-021-02-VA	F21-15-021-01-HA	T
2.0 Cupra	10.13 -	1070	1070	E20-15-021-02-22	A, 18, 20, 170			25	20					F21-15-021-02-VA	F21-15-021-01-HA	T
1.0 TSI, 1.2 TSI, 1.4 TSI, 1.8 TSI, 1.6 TDI, 2.0 TDI	09.12 -	970	1010	E20-15-021-03-22	A, 18, 20, 171			45	40					F21-15-021-01-VA	F21-15-021-03-HA	T
1.8 TSI, 1.6 TDI, 2.0 TDI	09.12 -	1070	1010	E20-15-021-04-22	A, 18, 20, 171			45	40					F21-15-021-02-VA	F21-15-021-03-HA	T
Anti-Roll-Kit (Performance Stabilisatoren | *Performance Sway Bars*)																
1.0 TSI, 1.2 TSI, 1.4 TSI, 1.8 TSI, 1.6 TDI, 2.0 TDI, 2.0 Cupra	09.12 -			E40-15-021-01-11	A, 18, 20, 22, 45, 170					28 Rohr *28 tube*	25 Rohr *25 tube*	2-fach verstellbar *2-way adjustable*	nicht verstellbar *not adjustable*	AS41-15-021-01-VA	AS41-15-021-01-HA	T
1.0 TSI, 1.2 TSI, 1.4 TSI, 1.8 TSI, 1.6 TDI, 2.0 TDI	09.12 -			E40-15-021-03-11	A, 18, 20, 22, 45, 171					28 Rohr *28 tube*	25	2-fach verstellbar *2-way adjustable*	nicht verstellbar *not adjustable*	AS41-15-021-01-VA	AS41-15-021-03-HA	T
Pro-Tronic (Elektronische Performance Fahrwerksmodule | *Electronic Performance Suspension Moduls*)																
Alle Motorisierungen / *all motorisation*	09.12 -			AM65-15-021-01-22	A, 175											

Modell	Baujahr	Achslast Vorne kg	Achslast Hinten kg	Artikel-Nr.	Hinweise	ab Nachtrag ...xx BE	bis Nachtrag ...xx BE	ca. Tieferl. Vorne mm	ca. Tieferl. Hinten mm	Ø Vorne mm	Ø Hinten mm	Verstellbarkeit Vorne	Verstellbarkeit Hinten	Ersatzteilbez. Vorne	Ersatzteilbez. Hinten	Gutachten
Model	*Year*	*Front Axle Load kg*	*Rear Axle Load kg*	*Part-No.*	*Notes*	*from suppl. ...xx of type approval*	*to suppl. ...xx of type approval*	*ca. Lowering Front mm*	*ca. Lowering Rear mm*	*Ø Front mm*	*Ø Rear mm*	*Adjustable Front*	*Adjustable Rear*	*Spare Part Marking Front*	*Spare Part Marking Rear*	*Homologation*
LEON (5F1)																
B12 Pro-Kit (Performance Komplettfahrwerke | *Performance Springs+Shocks*)																
1.0 TSI, 1.2 TSI, 1.4 TSI, 1.8 TSI, 1.6 TDI, 2.0 TDI	09.12 -	985	1000	E90-15-021-01-22	A, 18, 20, 35, 78, 161, 170, 188			35	30					F11-15-021-01-VA	F11-15-021-01-HA	T
1.8 TSI, 1.6 TDI, 2.0 TDI	09.12 -	1070	1000	E90-15-021-02-22	A, 18, 20, 35, 78, 161, 170, 188			35	30					F11-15-021-02-VA	F11-15-021-01-HA	T
2.0 Cupra	10.13 -	1070	1000	E90-15-021-02-22	A, 18, 20, 35, 78, 161, 170, 188			15	10					F11-15-021-02-VA	F11-15-021-01-HA	T
1.0 TSI, 1.2 TSI, 1.4 TSI, 1.8 TSI, 1.6 TDI, 2.0 TDI	09.12 -	985	990	E90-15-021-03-22	A, 18, 20, 35, 78, 161, 171, 189			35	30					F11-15-021-01-VA	F1540002	T
1.8 TSI, 1.6 TDI, 2.0 TDI	09.12 -	1070	990	E90-15-021-04-22	A, 18, 20, 35, 78, 161, 171, 189			35	30					F11-15-021-02-VA	F1540002	T
1.0 TSI, 1.2 TSI, 1.4 TSI, 1.8 TSI, 1.6 TDI, 2.0 TDI	09.12 -	985	1000	E90-15-021-15-22	A, 18, 20, 34, 78, 161, 170, 190			35	30					F21-15-021-01-VA	F21-15-021-01-HA	T
1.8 TSI, 1.6 TDI, 2.0 TDI	09.12 -	1070	1000	E90-15-021-16-22	A, 18, 20, 34, 78, 161, 170, 190			35	30					F11-15-021-02-VA	F11-15-021-01-HA	T
2.0 Cupra	10.13 -	1070	1000	E90-15-021-16-22	A, 18, 20, 34, 78, 161, 170, 190			15	10					F11-15-021-02-VA	F11-15-021-01-HA	T
1.0 TSI, 1.2 TSI, 1.4 TSI, 1.8 TSI, 1.6 TDI, 2.0 TDI	09.12 -	985	990	E90-15-021-17-22	A, 18, 20, 34, 78, 161, 171, 191			35	30					F11-15-021-01-VA	F1540002	T
1.8 TSI, 1.6 TDI, 2.0 TDI	09.12 -	1070	990	E90-15-021-18-22	A, 18, 20, 34, 78, 161, 171, 191			35	30					F11-15-021-02-VA	F1540002	T
B12 Sportline (Performance Komplettfahrwerke Sport | *Sport Performance Springs+Shocks*)																
1.0 TSI, 1.2 TFSI, 1.4 TFSI, 1.8 TSI, 1.6 TDI	09.12 -	970	1070	E95-15-021-01-22	A, 18, 20, 35, 78, 161, 170, 188			45	35-40					F21-15-021-01-VA	F21-15-021-01-HA	T
1.8 TSI, 1.6 TDI, 2.0 TDI	09.12 -	1070	1010	E95-15-021-02-22	A, 18, 20, 35, 78, 161, 170, 188			45	35-40					F11-15-021-02-VA	F11-15-021-01-HA	T
2.0 Cupra	10.13 -	1070	1010	E95-15-021-02-22	A, 18, 20, 35, 78, 161, 170, 188			25	15-20					F11-15-021-02-VA	F11-15-021-01-HA	T
1.0 TSI, 1.2 TFSI, 1.4 TFSI, 1.8 TSI, 1.6 TDI	09.12 -	970	1010	E95-15-021-03-22	A, 18, 20, 35, 78, 161, 171, 189			45	35-40					F21-15-021-01-VA	F21-15-021-03-HA	T
1.8 TSI, 1.6 TDI, 2.0 TDI	09.12 -	1070	1010	E95-15-021-04-22	A, 18, 20, 35, 78, 161, 171, 189			45	35-40					F21-15-021-02-VA	F21-15-021-03-HA	T
1.0 TSI, 1.2 TFSI, 1.4 TFSI, 1.8 TSI, 1.6 TDI	09.12 -	970	1070	E95-15-021-15-22	A, 18, 20, 34, 78, 161, 170, 190			45	35-40					F21-15-021-01-VA	F21-15-021-01-HA	T
1.8 TSI, 1.6 TDI, 2.0 TDI	09.12 -	1070	1070	E95-15-021-16-22	A, 18, 20, 34, 78, 161, 170, 190			45	35-40					F21-15-021-02-VA	F21-15-021-01-HA	T
2.0 Cupra	10.13 -	1070	1070	E95-15-021-16-22	A, 18, 20, 34, 78, 161, 170, 190			25	15-20					F21-15-021-02-VA	F21-15-021-01-HA	T
1.0 TSI, 1.2 TFSI, 1.4 TFSI, 1.8 TSI, 1.6 TDI	09.12 -	970	1010	E95-15-021-17-22	A, 18, 20, 34, 78, 161, 171, 191			45	35-40					F21-15-021-01-VA	F21-15-021-03-HA	T
1.8 TSI, 1.6 TDI, 2.0 TDI	09.12 -	1070	1010	E95-15-021-18-22	A, 18, 20, 34, 78, 161, 171, 191			45	35-40					F21-15-021-02-VA	F21-15-021-03-HA	T
Pro-Street-S (Gewindefahrwerke - höhenverstellbar | *Coil-Overs-Adjustable Ride Hight*)																
1.0 TSI, 1.2 TSI, 1.4 TSI	11.12 -	965	980	PSS65-15-021-07-22	A,24,25,35,45, 160, 171			35-65	35-65							T
1.0 TSI, 1.2 TSI, 1.4 TSI	11.12 -	965	980	PSS65-15-021-09-22	A,24,25,35,45, 160, 170			35-65	35-65							T
1.8 TFSI, 1.6 TDI, 2.0 TDI	11.12 -	1060	980	PSS65-15-021-08-22	A,24,25,35,45, 160, 171			35-65	35-65							T
1.8 TFSI, 1.6 TDI, 2.0 TDI	11.12 -	1080	980	PSS65-15-021-10-22	A,24,25,35,45, 160, 170			35-65	35-65							T
1.8 TFSI, 1.6 TDI, 2.0 TDI	11.12 -	1080	980	PSS65-15-021-11-22	A,24,25,34,45, 160, 170			35-65	35-65							T
LEON SC (5F5)																
Pro-Kit (Performance Fahrwerksfedern | *Performance Springs*)																
1.0 TSI, 1.2 TSI, 1.4 TSI, 1.8 TSI, 1.6 TDI, 2.0 TDI	09.12 -	985	1000	E10-15-021-01-22	A, 18, 20, 170			35	30					F11-15-021-01-VA	F11-15-021-01-HA	T
1.6 TDI, 1.8 TSI, 2.0 TDI	02.13 -	1070	1000	E10-15-021-02-22	A, 18, 20, 170			35	30					F11-15-021-02-VA	F11-15-021-01-HA	T
2.0 Cupra	02.13 -	1070	1000	E10-15-021-02-22	A, 18, 20, 170			15	10					F11-15-021-02-VA	F11-15-021-01-HA	T
1.0 TSI, 1.2 TSI, 1.4 TSI, 1.8 TSI, 1.6 TDI, 2.0 TDI	09.12 -	985	990	E10-15-021-03-22	A, 18, 20, 171			35	30					F11-15-021-01-VA	F1540002	T
1.6 TDI, 1.8 TSI, 2.0 TDI	02.13 -	1070	990	E10-15-021-04-22	A, 18, 20, 171			35	30					F11-15-021-02-VA	F1540002	T
Sportline (Performance Fahrwerksfedern Sport | *Sport Performance Springs*)																
1.0 TSI, 1.2 TSI, 1.4 TSI, 1.8 TSI, 1.6 TDI, 2.0 TDI	09.12 -	970	1070	E20-15-021-01-22	A, 18, 20, 170			45	40					F21-15-021-01-VA	F21-15-021-01-HA	T
1.6 TDI, 1.8 TSI, 2.0 TDI	09.12 -	1070	1070	E20-15-021-02-22	A, 18, 20, 170			45	40					F21-15-021-02-VA	F21-15-021-01-HA	T
2.0 Cupra	10.13 -	1070	1070	E20-15-021-02-22	A, 18, 20, 170			25	20					F21-15-021-02-VA	F21-15-021-01-HA	T
1.0 TSI, 1.2 TSI, 1.4 TSI, 1.8 TSI, 1.6 TDI, 2.0 TDI	09.12 -	970	1010	E20-15-021-03-22	A, 18, 20, 171			45	40					F21-15-021-01-VA	F21-15-021-03-HA	T
1.6 TDI, 1.8 TSI, 2.0 TDI	09.12 -	1070	1010	E20-15-021-04-22	A, 18, 20, 171			45	40					F21-15-021-02-VA	F21-15-021-03-HA	T

SEAT

Modell *Model*	Baujahr *Year*	Achslast Vorne kg *Front Axle Load kg*	Achslast Hinten kg *Rear Axle Load kg*	Artikel-Nr. *Part-No.*	Hinweise *Notes*	ab Nachtrag ...xx BE *from suppl. ...xx of type approval*	bis Nachtrag ...xx BE *to suppl. ...xx of type approval*	ca. Tieferl. Vorne mm *ca. Lowering Front mm*	ca. Tieferl. Hinten mm *ca. Lowering Rear mm*	Ø Vorne mm *Ø Front mm*	Ø Hinten mm *Ø Rear mm*	Verstellbarkeit Vorne *Adjustable Front*	Verstellbarkeit Hinten *Adjustable Rear*	Ersatzteilbez. Vorne *Spare Part Marking Front*	Ersatzteilbez. Hinten *Spare Part Marking Rear*	Gutachten *Homologation*
LEON SC (5F5)																
Anti-Roll-Kit (Performance Stabilisatoren | *Performance Sway Bars*)																
1.0 TSI, 1.2 TSI, 1.4 TSI, 1.8 TSI, 1.6 TDI, 2.0 TDI	09.12 -			E40-15-021-01-11	A, 18, 20, 22, 45, 170					28 Rohr *28 tube*	25 Rohr *25 tube*	2-fach verstellbar *2-way adjustable*	nicht verstellbar *not adjustable*	AS41-15-021-01-VA	AS41-15-021-01-HA	T
1.0 TSI, 1.2 TSI, 1.4 TSI, 1.8 TSI, 1.6 TDI, 2.0 TDI	09.12 -			E40-15-021-03-11	A, 18, 20, 22, 45, 171					28 Rohr *28 tube*	25	2-fach verstellbar *2-way adjustable*	nicht verstellbar *not adjustable*	AS41-15-021-01-VA	AS41-15-021-03-HA	T
Pro-Tronic (Elektronische Performance Fahrwerksmodule | *Electronic Performance Suspension Moduls*)																
Alle Motorisierungen / *all motorisation*	09.12 -			AM65-15-021-01-22	A, 175											
B12 Pro-Kit (Performance Komplettfahrwerke | *Performance Springs+Shocks*)																
1.0 TSI, 1.2 TSI, 1.4 TSI, 1.8 TSI, 1.6 TDI, 2.0 TDI	09.12 -	985	1000	E90-15-021-01-22	A, 18, 20, 35, 78, 161, 170, 188			35	30					F11-15-021-01-VA	F11-15-021-01-HA	T
1.8 TSI, 1.6 TDI, 2.0 TDI	09.12 -	1070	1000	E90-15-021-02-22	A, 18, 20, 35, 78, 161, 170, 188			35	30					F11-15-021-02-VA	F11-15-021-01-HA	T
2.0 Cupra	09.12 -	1070	1000	E90-15-021-02-22	A, 18, 20, 35, 78, 161, 170, 188			15	10					F11-15-021-02-VA	F11-15-021-01-HA	T
1.0 TSI, 1.2 TSI, 1.4 TSI, 1.8 TSI, 1.6 TDI, 2.0 TDI	09.12 -	985	990	E90-15-021-03-22	A, 18, 20, 35, 78, 161, 171, 189			35	30					F11-15-021-01-VA	F1540002	T
1.8 TSI, 1.6 TDI, 2.0 TDI	09.12 -	1070	990	E90-15-021-04-22	A, 18, 20, 35, 78, 161, 171, 189			35	30					F11-15-021-02-VA	F1540002	T
1.0 TSI, 1.2 TSI, 1.4 TSI, 1.8 TSI, 1.6 TDI, 2.0 TDI	09.12 -	985	1000	E90-15-021-15-22	A, 18, 20, 34, 78, 161, 170, 190			35	30					F21-15-021-01-VA	F21-15-021-01-HA	T
1.8 TSI, 1.6 TDI, 2.0 TDI	09.12 -	1070	1000	E90-15-021-16-22	A, 18, 20, 34, 78, 161, 170, 190			35	30					F11-15-021-02-VA	F11-15-021-01-HA	T
2.0 Cupra	09.12 -	1070	1000	E90-15-021-16-22	A, 18, 20, 34, 78, 161, 170, 190			15	10					F11-15-021-02-VA	F11-15-021-01-HA	T
1.0 TSI, 1.2 TSI, 1.4 TSI, 1.8 TSI, 1.6 TDI, 2.0 TDI	09.12 -	985	990	E90-15-021-17-22	A, 18, 20, 34, 78, 161, 171, 191			35	30					F11-15-021-01-VA	F1540002	T
1.8 TSI, 1.6 TDI, 2.0 TDI	09.12 -	1070	990	E90-15-021-18-22	A, 18, 20, 34, 78, 161, 171, 191			35	30					F11-15-021-02-VA	F1540002	T
B12 Sportline (Performance Komplettfahrwerke Sport | *Sport Performance Springs+Shocks*)																
1.0 TSI, 1.2 TSI, 1.4 TSI, 1.8 TSI, 1.6 TDI, 2.0 TDI	09.12 -	970	1070	E95-15-021-01-22	A, 18, 20, 35, 78, 161, 170, 188			45	40					F21-15-021-01-VA	F21-15-021-01-HA	T
1.8 TSI, 1.6 TDI, 2.0 TDI	09.12 -	1070	1010	E95-15-021-02-22	A, 18, 20, 35, 78, 161, 170, 188			45	40					F11-15-021-02-VA	F11-15-021-01-HA	T
2.0 Cupra	10.13 -	1070	1010	E95-15-021-02-22	A, 18, 20, 35, 78, 161, 170, 188			25	20					F11-15-021-02-VA	F11-15-021-01-HA	T
1.0 TSI, 1.2 TSI, 1.4 TSI, 1.8 TSI, 1.6 TDI, 2.0 TDI	09.12 -	970	1010	E95-15-021-03-22	A, 18, 20, 35, 78, 161, 171, 189			45	40					F21-15-021-01-VA	F21-15-021-03-HA	T
1.8 TSI, 1.6 TDI, 2.0 TDI	09.12 -	1070	1010	E95-15-021-04-22	A, 18, 20, 35, 78, 161, 171, 189			45	40					F21-15-021-02-VA	F21-15-021-03-HA	T
1.0 TSI, 1.2 TSI, 1.4 TSI, 1.8 TSI, 1.6 TDI, 2.0 TDI	09.12 -	970	1070	E95-15-021-15-22	A, 18, 20, 34, 78, 161, 170, 190			45	40					F21-15-021-01-VA	F21-15-021-01-HA	T
1.8 TSI, 1.6 TDI, 2.0 TDI	09.12 -	1070	1070	E95-15-021-16-22	A, 18, 20, 34, 78, 161, 170, 190			45	40					F21-15-021-02-VA	F21-15-021-01-HA	T
2.0 Cupra	10.13 -	1070	1070	E95-15-021-16-22	A, 18, 20, 34, 78, 161, 170, 190			25	20					F21-15-021-02-VA	F21-15-021-01-HA	T
Pro-Street-S (Gewindefahrwerke - höhenverstellbar | *Coil-Overs-Adjustable Ride Hight*)																
1.0 TSI, 1.2 TSI, 1.4 TSI	09.12 -	965	980	PSS65-15-021-07-22	A, 24, 25, 35, 45, 160, 171			35-65	35-65							T
1.0 TSI, 1.2 TSI, 1.4 TSI	09.12 -	965	980	PSS65-15-021-09-22	A, 24, 25, 35, 45, 160, 170			35-65	35-65							T
1.8 TSI, 1.6 TDI, 2.0 TDI	09.12 -	1060	980	PSS65-15-021-08-22	A, 24, 25, 35, 45, 160, 171			35-65	35-65							T
1.8 TSI, 1.6 TDI, 2.0 TDI	09.12 -	1080	980	PSS65-15-021-10-22	A, 24, 25, 35, 45, 160, 170			35-65	35-65							T
1.8 TSI, 1.6 TDI, 2.0 TDI	09.12 -	1080	980	PSS65-15-021-11-22	A, 24, 25, 34, 45, 160, 170			35-65	35-65							T
LEON ST (5F8)																
Pro-Kit (Performance Fahrwerksfedern | *Performance Springs*)																
1.0 TSI, 1.2 TSI, 1.4 TSI, 1.8 TSI, 1.6 TDI, 2.0 TDI	10.13 -	985	1075	E10-79-010-01-22	A, 18, 20, 170			35	30					F11-15-021-01-VA	F11-15-007-15-HA	T
1.8 TSI, 1.6 TDI, 2.0 TDI	10.13 -	1070	1075	E10-79-010-02-22	A, 18, 20, 170			35	30					F11-15-021-02-VA	F11-15-007-15-HA	T
2.0 Cupra	10.13 -	1070	1075	E10-79-010-02-22	A, 18, 20, 170			15	10					F11-15-021-02-VA	F11-15-007-15-HA	T
1.0 TSI, 1.2 TSI, 1.4 TSI, 1.8 TSI, 1.6 TDI, 2.0 TDI	10.13 -	985	1030	E10-79-010-03-22	A, 18, 20, 171			35	30					F11-15-021-01-VA	F11-70-012-01-HA	T
1.8 TSI, 1.6 TDI, 2.0 TDI	10.13 -	1070	1030	E10-79-010-04-22	A, 18, 20, 171			35	30					F11-15-021-02-VA	F11-70-012-01-HA	T
Sportline (Performance Fahrwerksfedern Sport | *Sport Performance Springs*)																
1.0 TSI, 1.2 TSI, 1.4 TSI, 1.8 TSI, 1.6 TDI, 2.0 TDI	10.13 -	970	1070	E20-15-021-01-22	A, 18, 20, 170			45	40					F21-15-021-01-VA	F21-15-021-01-HA	T
1.8 TSI, 1.6 TDI, 2.0 TDI	10.13 -	1070	1070	E20-15-021-02-22	A, 18, 20, 170			45	40					F21-15-021-02-VA	F21-15-021-01-HA	T
2.0 Cupra	10.13 -	1070	1070	E20-15-021-02-22	A, 18, 20, 170			25	20					F21-15-021-02-VA	F21-15-021-01-HA	T
Anti-Roll-Kit (Performance Stabilisatoren | *Performance Sway Bars*)																
1.0 TSI, 1.2 TSI, 1.4 TSI, 1.8 TSI, 1.6 TDI, 2.0 TDI	10.13 -			E40-15-021-01-11	A, 18, 20, 22, 45, 170					28 Rohr *28 tube*	25 Rohr *25 tube*	2-fach verstellbar *2-way adjustable*	nicht verstellbar *not adjustable*	AS41-15-021-01-VA	AS41-15-021-01-HA	T

SEAT

Modell *Model*	Baujahr *Year*	Achslast Vorne kg *Front Axle Load kg*	Achslast Hinten kg *Rear Axle Load kg*	Artikel-Nr. *Part-No.*	Hinweise *Notes*	ab Nachtrag ...xx BE *from suppl. ...xx of type approval*	bis Nachtrag ...xx BE *to suppl. ...xx of type approval*	ca. Tieferl. Vorne mm *ca. Lowering Front mm*	ca. Tieferl. Hinten mm *ca. Lowering Rear mm*	Ø Vorne mm *Ø Front mm*	Ø Hinten mm *Ø Rear mm*	Verstellbarkeit Vorne *Adjustable Front*	Verstellbarkeit Hinten *Adjustable Rear*	Ersatzteilbez. Vorne *Spare Part Marking Front*	Ersatzteilbez. Hinten *Spare Part Marking Rear*	Gutachten *Homologation*
LEON ST (5F8)																
Anti-Roll-Kit (Performance Stabilisatoren | *Performance Sway Bars*)																
1.8 TSI 4Drive, 1.6 TDI 4Drive, 2.0 TDI 4Drive	10.13 -			E40-15-021-02-11	A, 18, 22, 45, 170					28 Rohr *28 tube*	25 Rohr *25 tube*	2-fach verstellbar *2-way adjustable*	2-fach verstellbar *2-way adjustable*	AS41-15-021-02-VA	AS41-15-021-02-HA	T
1.0 TSI, 1.2 TSI, 1.4 TSI, 1.8 TSI, 1.6 TDI, 2.0 TDI	10.13 -			E40-15-021-03-11	A, 18, 20, 22, 45, 171					28 Rohr *28 tube*	25	2-fach verstellbar *2-way adjustable*	nicht verstellbar *not adjustable*	AS41-15-021-01-VA	AS41-15-021-03-HA	T
Pro-Tronic (Elektronische Performance Fahrwerksmodule | *Electronic Performance Suspension Moduls*)																
Alle Motorisierungen / *all motorisation*	10.13 -			AM65-15-021-01-22	A, 175											
B12 Pro-Kit (Performance Komplettfahrwerke | *Performance Springs+Shocks*)																
1.0 TSI, 1.2 TSI, 1.4 TSI, 1.8 TSI, 1.6 TDI, 2.0 TDI	10.13 -	985	1075	E90-79-010-01-22	A, 18, 20, 35, 78, 161, 170, 188			35	30					F11-15-021-01-VA	F11-15-007-15-HA	T
1.8 TSI, 1.6 TDI, 2.0 TDI	10.13 -	1070	1075	E90-79-010-02-22	A, 18, 20, 35, 78, 161, 170, 188			35	30					F11-15-021-02-VA	F11-15-007-15-HA	T
2.0 Cupra	10.13 -	1070	1075	E90-79-010-02-22	A, 18, 20, 35, 78, 161, 170, 188			15	10					F11-15-021-02-VA	F11-15-007-15-HA	T
1.0 TSI, 1.2 TSI, 1.4 TSI, 1.8 TSI, 1.6 TDI, 2.0 TDI	10.13 -	985	1030	E90-79-010-03-22	A, 18, 20, 35, 78, 161, 171, 189			35	30					F11-15-021-01-VA	F11-70-012-01-HA	T
1.8 TSI, 1.6 TDI, 2.0 TDI	10.13 -	1070	1030	E90-79-010-04-22	A, 18, 20, 35, 78, 161, 171, 189			35	30					F11-15-021-02-VA	F11-70-012-01-HA	T
1.0 TSI, 1.2 TSI, 1.4 TSI, 1.8 TSI, 1.6 TDI, 2.0 TDI	10.13 -	985	1075	E90-79-010-05-22	A, 18, 20, 34, 78, 161, 170, 190			35	30					F11-15-021-01-VA	F11-15-007-15-HA	T
1.8 TSI, 1.6 TDI, 2.0 TDI	10.13 -	1070	1075	E90-79-010-06-22	A, 18, 20, 34, 78, 161, 170, 190			35	30					F11-15-021-02-VA	F11-15-007-15-HA	T
1.0 TSI, 1.2 TSI, 1.4 TSI, 1.8 TSI, 1.6 TDI, 2.0 TDI	10.13 -	985	1030	E90-79-010-07-22	A, 18, 20, 34, 78, 161, 171, 191			35	30					F11-15-021-01-VA	F11-70-012-01-HA	T
1.8 TSI, 1.6 TDI, 2.0 TDI	10.13 -	1070	1030	E90-79-010-08-22	A, 18, 20, 34, 78, 161, 171, 191			35	30					F11-15-021-02-VA	F11-70-012-01-HA	T
2.0 Cupra	10.13 -	1070	1075	E90-79-010-06-22	A, 18, 20, 34, 78, 161, 170, 190			15	10					F11-15-021-02-VA	F11-15-007-15-HA	T
B12 Sportline (Performance Komplettfahrwerke Sport | *Sport Performance Springs+Shocks*)																
1.0 TSI, 1.2 TSI, 1.4 TSI, 1.8 TSI, 1.6 TDI, 2.0 TDI	10.13 -	970	1070	E95-15-021-01-22	A, 18, 20, 35, 78, 161, 170, 188			45	40					F21-15-021-01-VA	F21-15-021-01-HA	T
1.8 TSI, 1.6 TDI, 2.0 TDI	10.13 -	1070	1010	E95-15-021-02-22	A, 18, 20, 35, 78, 161, 170, 188			45	40					F11-15-021-02-VA	F11-15-021-01-HA	T
2.0 Cupra	10.13 -	1070	1010	E95-15-021-02-22	A, 18, 20, 35, 78, 161, 170, 188			25	20					F11-15-021-02-VA	F11-15-021-01-HA	T
1.0 TSI, 1.2 TSI, 1.4 TSI, 1.8 TSI, 1.6 TDI, 2.0 TDI	10.13 -	970	1010	E95-15-021-03-22	A, 18, 20, 35, 78, 161, 171, 189			45	40					F21-15-021-01-VA	F21-15-021-03-HA	T
1.8 TSI, 1.6 TDI, 2.0 TDI	10.13 -	1070	1010	E95-15-021-04-22	A, 18, 20, 35, 78, 161, 171, 189			45	40					F21-15-021-02-VA	F21-15-021-03-HA	T
1.0 TSI, 1.2 TSI, 1.4 TSI, 1.8 TSI, 1.6 TDI, 2.0 TDI	10.13 -	1070	1075	E95-15-021-05-22	A, 18, 20, 34, 78, 161, 170, 190			45	40					F21-15-021-02-VA	F21-15-021-05-HA	T
1.8 TSI, 1.6 TDI, 2.0 TDI	10.13 -	1070	1010	E95-15-021-06-22	A, 18, 20, 34, 78, 161, 170, 190			45	40					F21-15-021-02-VA	F21-15-021-03-HA	T
2.0 Cupra	10.13 -	1070	1070	E95-15-021-16-22	A, 18, 20, 34, 78, 161, 170, 190			25	20					F21-15-021-02-VA	F21-15-021-01-HA	T
Pro-Street-S (Gewindefahrwerke - höhenverstellbar | *Coil-Overs-Adjustable Ride Hight*)																
1.0 TSI, 1.2 TSI, 1.4 TSI	10.13 -	965	1050	PSS65-15-021-12-22	A, 24, 25, 34, 45, 160, 170			35-65	35-65							T
1.8 TSI, 1.6 TDI, 2.0 TDI	10.13 -	1090	1050	PSS65-15-021-13-22	A, 24, 25, 34, 45, 160, 170			35-65	35-65							T
1.0 TSI, 1.2 TSI, 1.4 TSI	10.13 -	965	1050	PSS65-15-021-14-22	A, 24, 25, 35, 45, 160, 170			35-65	35-65							T
1.8 TSI, 1.6 TDI, 2.0 TDI	10.13 -	1090	1050	PSS65-15-021-15-22	A, 24, 25, 35, 45, 160, 170			35-65	35-65							T
1.0 TSI, 1.2 TSI, 1.4 TSI	10.13 -	965	1050	PSS65-15-021-16-22	A, 24, 25, 35, 45, 160, 171			35-65	35-65							T
1.8 TSI, 1.6 TDI, 2.0 TDI	10.13 -	1090	1050	PSS65-15-021-17-22	A, 24, 25, 35, 45, 160, 171			35-65	35-65							T
Mii (KF1_)																
Pro-Kit (Performance Fahrwerksfedern | *Performance Springs*)																
1.0	10.11 -	680	640	E10-85-040-01-22	A, 18, 20			20	25					F11-85-040-01-VA	F11-85-040-01-HA	T
B12 Pro-Kit (Performance Komplettfahrwerke | *Performance Springs+Shocks*)																
1.0	10.11 -	680	640	E90-85-040-01-22	A, 18, 20, 78, 161			20	25					F11-85-040-01-VA	F11-85-040-01-HA	T
Pro-Street-S (Gewindefahrwerke - höhenverstellbar | *Coil-Overs-Adjustable Ride Hight*)																
1.0	10.11 -	680	640	PSS65-85-040-01-22	A, 24, 25, 45, 160			30-60	30-60							T
TOLEDO II (1M2)																
Pro-Kit (Performance Fahrwerksfedern | *Performance Springs*)																
1.4 16V, 1.6, 1.6 16V	04.99 - 05.06	910	1000	E8113-140	A, 18, 20			30	20-25					F8560001	F7907002	T
1.8 20V, 1.8 20VT, 1.9 SDI, 1.9 TDI	04.99 - 05.06	982	1000	E8114-140	A, 18, 20, 26			30	20-25					F1540001	F7907002	T
1.9 TDI, 2.3 V5, 2.3 V5 20V	04.99 - 05.06	1005	1000	E8115-140	A, 18, 20, 26			30	20-25					F1545001	F7907002	T
Sportline (Performance Fahrwerksfedern Sport | *Sport Performance Springs*)																
1.4 16V, 1.6, 1.6 16V, 1.8 20V, 1.8 20VT, 1.9 SDI, 1.9 TDI	04.99 - 05.06	950	1000	E20-81-004-01-22	A, 18, 20, 26			45-50	30					F21-85-001-01-VA	F21-85-001-01-HA	T
1.9 TDI, 2.3 V5, 2.3 V5 20V	04.99 - 05.06	1000	1000	E20-81-004-02-22	A, 18, 20, 26			45-50	30					F21-85-003-01-VA	F21-85-001-01-HA	T

SEAT

Modell *Model*	Baujahr *Year*	Achslast Vorne kg *Front Axle Load kg*	Achslast Hinten kg *Rear Axle Load kg*	Artikel-Nr. *Part-No.*	Hinweise *Notes*	ab Nachtrag ...xx BE *from suppl. ...xx of type approval*	bis Nachtrag ...xx BE *to suppl. ...xx of type approval*	ca. Tieferl. Vorne mm *ca. Lowering Front mm*	ca. Tieferl. Hinten mm *ca. Lowering Rear mm*	Ø Vorne mm *Ø Front mm*	Ø Hinten mm *Ø Rear mm*	Verstellbarkeit Vorne *Adjustable Front*	Verstellbarkeit Hinten *Adjustable Rear*	Ersatzteilbez. Vorne *Spare Part Marking Front*	Ersatzteilbez. Hinten *Spare Part Marking Rear*	Gutachten *Homologation*
TOLEDO II (1M2)																
Anti-Roll-Kit (Performance Stabilisatoren | *Performance Sway Bars*)																
1.4 16V, 1.6, 1.6 16V, 1.8 20V, 1.8 20VT, 1.9 SDI, 1.9 TDI, 2.3 V5, 2.3 V5 20V	04.99 - 05.06			E40-85-005-01-10	A, 18, 20, 22, 45					25		nicht verstellbar *not adjustable*		AS41-85-005-01-VA		T
1.4 16V, 1.6, 1.6 16V, 1.8 20V, 1.8 20VT, 1.9 SDI, 1.9 TDI, 2.3 V5, 2.3 V5 20V	04.99 - 05.06			E40-85-005-01-11	A, 18, 20, 22, 45					25	25	nicht verstellbar *not adjustable*	nicht verstellbar *not adjustable*	AS41-85-005-01-VA	AS1540320HA	T
B12 Pro-Kit (Performance Komplettfahrwerke | *Performance Springs+Shocks*)																
1.4 16V, 1.6, 1.6 16V	04.99 - 05.06	910	1000	E90-81-004-01-22	A, 18, 20, 26, 78, 161			30	20-25					F8560001	F7907002	T
1.8 20V, 1.8 20VT, 1.9 SDI, 1.9 TDI	04.99 - 05.06	982	1000	E90-81-004-02-22	A, 18, 20, 26, 78, 161			30	20-25					F1540001	F7907002	T
1.9 TDI, 2.3 V5, 2.3 V5 20V	04.99 - 05.06	1005	1000	E90-81-004-03-22	A, 18, 20, 26, 78, 161			30	20-25					F1545001	F7907002	T
B12 Sportline (Performance Komplettfahrwerke Sport | *Sport Performance Springs+Shocks*)																
1.4 16V, 1.6, 1.6 16V, 1.8 20V, 1.8 20VT, 1.9 SDI, 1.9 TDI	04.99 - 05.06	950	1000	E95-81-004-01-22	A, 18, 20, 26, 78, 161			45-50	30					F21-85-001-01-VA	F21-85-001-01-HA	T
1.9 SDI, 1.9 TDI, 2.3 V5, 2.3 V5 20V	04.99 - 05.06	1000	1000	E95-81-004-02-22	A, 18, 20, 26, 78, 161			45-50	30					F21-85-003-01-VA	F21-85-001-01-HA	T
TOLEDO III (5P2)																
Pro-Kit (Performance Fahrwerksfedern | *Performance Springs*)																
1.4 16V, 1.6, 2.0 FSI	10.04 - 05.09	1022	1050	E10-81-008-01-22	A, 18, 20			30	30					F11-15-007-01-VA	F11-15-007-01-HA	T
1.8 TFSI, 2.0 FSI, 2.0 TFSI, 1.9 TDI, 2.0 TDI, 2.0 TDI 16V	04.04 - 05.09	1120	1050	E10-81-008-02-22	A, 18, 20			30	30					F11-15-007-03-VA	F11-15-007-01-HA	T
Anti-Roll-Kit (Performance Stabilisatoren | *Performance Sway Bars*)																
1.4 16V, 1.6, 1.8 TFSI, 2.0 FSI, 2.0 TFSI, 1.6 TDI, 1.9 TDI, 2.0 TDI, 2.0 TDI 16V	04.04 - 05.09			E40-85-014-06-11	A, 18, 20, 22, 45					26	23	2-fach verstellbar *2-way adjustable*	2-fach verstellbar *2-way adjustable*	AS41-85-014-01-VA	AS41-85-014-01-HA	T
B12 Pro-Kit (Performance Komplettfahrwerke | *Performance Springs+Shocks*)																
1.4 16V, 1.6, 2.0 FSI	10.04 - 05.09	1022	1050	E90-81-008-02-22	A, 18, 20, 34, 78, 161			30	30					F11-15-007-01-VA	F11-15-007-01-HA	T
1.4 16V, 1.6, 2.0 FSI	10.04 - 05.09	1022	1050	E90-81-008-01-22	A, 18, 20, 35, 78, 161			30	30					F11-15-007-01-VA	F11-15-007-01-HA	T
1.8 TFSI, 2.0 FSI, 2.0 TFSI, 1.9 TDI, 2.0 TDI, 2.0 TDI 16V	04.04 - 05.09	1120	1050	E90-81-008-04-22	A, 18, 20, 34, 78, 161			30	30					F11-15-007-03-VA	F11-15-007-01-HA	T
1.8 TFSI, 2.0 FSI, 2.0 TFSI, 1.9 TDI, 2.0 TDI, 2.0 TDI 16V	04.04 - 05.09	1120	1050	E90-81-008-03-22	A, 18, 20, 35, 78, 161			30	30					F11-15-007-03-VA	F11-15-007-01-HA	T
Pro-Street-S (Gewindefahrwerke - höhenverstellbar | *Coil-Overs-Adjustable Ride Hight*)																
1.4 16V, 1.6, 2.0 FSI, 1.8 TSI, 2.0 TSI, 1.9 TDI, 2.0 TDI, 2.0 TDI 16V	04.04 - 05.09	1035	1150	PSS65-85-014-01-22	A, 20, 24, 34, 45, 101, 160			25-55	30-60							T
1.4 16V, 1.6, 2.0 FSI, 1.8 TSI, 2.0 TSI, 1.9 TDI, 2.0 TDI, 2.0 TDI 16V	04.04 - 05.09	1035	1150	PSS65-85-014-02-22	A, 20, 24, 35, 45, 101, 160			25-55	30-60							T
1.4 16V, 1.6, 2.0 FSI, 1.8 TSI, 2.0 TSI, 1.9 TDI, 2.0 TDI, 2.0 TDI 16V	04.04 - 05.09	1105	1150	PSS65-85-014-03-22	A, 20, 24, 34, 45, 101, 160			25-55	30-60							T
1.4 16V, 1.6, 2.0 FSI, 1.8 TSI, 2.0 TSI, 1.9 TDI, 2.0 TDI, 2.0 TDI 16V	04.04 - 05.09	1105	1150	PSS65-85-014-04-22	A, 20, 24, 35, 45, 101, 160			25-55	30-60							T
1.4 16V, 1.6, 2.0 FSI, 1.8 TSI, 2.0 TSI, 1.9 TDI, 2.0 TDI, 2.0 TDI 16V	04.04 - 05.09	1170	1150	PSS65-85-014-05-22	A, 20, 24, 34, 45, 101, 160			25-55	30-60							T
1.4 16V, 1.6, 2.0 FSI, 1.8 TSI, 2.0 TSI, 1.9 TDI, 2.0 TDI, 2.0 TDI 16V	04.04 - 05.09	1170	1150	PSS65-85-014-06-22	A, 20, 24, 35, 45, 101, 160			25-55	30-60							T
TOLEDO IV (KG3)																
Pro-Kit (Performance Fahrwerksfedern | *Performance Springs*)																
1.2, 1.2 TSI	07.12 -	880	860	E10-79-009-01-22	A, 18, 20			30	30					F11-15-014-01-VA	F1540002	T
1.4 TSI, 1.4 TDI, 1.6, 1.6 TDI	07.12 -	960	860	E10-79-009-02-22	A, 18, 20			30	30					F11-81-010-05-VA	F1540002	T
B12 Pro-Kit (Performance Komplettfahrwerke | *Performance Springs+Shocks*)																
1.2, 1.2 TSI	07.12 -	880	860	E90-79-009-01-22	A, 18, 20, 78, 161			30	30					F11-15-014-01-VA	F1540002	T
1.4 TSI, 1.4 TDI, 1.6, 1.6 TDI	07.12 -	960	860	E90-79-009-02-22	A, 18, 20, 78, 161			30	30					F11-81-010-05-VA	F1540002	T

SKODA

CITIGO																
Pro-Kit (Performance Fahrwerksfedern | *Performance Springs*)																
1.0	10.11 -	680	640	E10-85-040-01-22	A, 18, 20			20	25					F11-85-040-01-VA	F11-85-040-01-HA	T
B12 Pro-Kit (Performance Komplettfahrwerke | *Performance Springs+Shocks*)																
1.0	10.11 -	680	640	E90-85-040-01-22	A, 18, 20, 78, 161			20	25					F11-85-040-01-VA	F11-85-040-01-HA	T
Pro-Street-S (Gewindefahrwerke - höhenverstellbar | *Coil-Overs-Adjustable Ride Hight*)																
1.0	10.11 -	680	640	PSS65-85-040-01-22	A, 24, 25, 45, 160			30-60	30-60							T
FABIA (6Y2)																
Pro-Kit (Performance Fahrwerksfedern | *Performance Springs*)																
1.0, 1.2, 1.4, 1.4 16V	08.99 - 03.08	900	800	E7910-140	A, 18, 20			30	30					F7910001	F7910002	T
1.4 TDI, 1.9 SDI, 1.9 TDI, 2.0	12.99 - 03.08	900	800	E7911-140	A, 18, 20			30	30					F7911001	F7910002	T
1.9 TDI RS	06.03 - 03.08	960	840	E10-79-001-05-22	A, 18, 20			25	25					F11-85-008-02-VA	F11-85-008-01-HA	T
Anti-Roll-Kit (Performance Stabilisatoren | *Performance Sway Bars*)																
1.0, 1.2, 1.4, 1.4 16V, 1.4 TDI, 1.9 SDI, 1.9 TDI, 1.9 TDI RS, 2.0	08.99 - 03.08			E40-85-008-01-10	A, 18, 20, 22, 45					22		nicht verstellbar *not adjustable*		AS41-85-008-01-VA		T
B12 Pro-Kit (Performance Komplettfahrwerke | *Performance Springs+Shocks*)																
1.0, 1.2, 1.4, 1.4 16V	08.99 - 03.08	920	840	E90-79-001-01-22	A, 18, 20, 78, 161			30	30					F7910001	F7910002	T
1.4 TDI, 1.9 SDI, 1.9 TDI, 2.0	12.99 - 03.08	960	840	E90-79-001-02-22	A, 18, 20, 78, 161			30	30					F7911001	F7910002	T
1.9 TDI RS	06.03 - 03.08	960	840	E90-79-001-05-22	A, 18, 20, 78, 161			25	25					F11-85-008-02-VA	F11-85-008-01-HA	T
FABIA																
Pro-Kit (Performance Fahrwerksfedern | *Performance Springs*)																
1.2, 1.2 12V, 1.2 TSI, 1.4, 1.6	12.06 -	960	840	E10-79-006-01-22	A, 18, 20			30	30					F11-85-008-01-VA	F11-85-008-01-HA	T
1.2 TDI, 1.4 TDI, 1.6 TDI, 1.9 TDI	01.07 -	960	840	E10-79-006-02-22	A, 18, 20			30	30					F11-79-005-01-VA	F11-85-008-01-HA	T
1.4 TSI	05.10 -	960	840	E10-79-006-09-22	A, 18, 20			20	20					F11-15-014-02-VA	F11-85-008-01-HA	T
Anti-Roll-Kit (Performance Stabilisatoren | *Performance Sway Bars*)																
1.2, 1.2 12V, 1.2 TDI, 1.2 TSI, 1.4, 1.4 TDI, 1.4 TSI, 1.6, 1.6 TDI, 1.9 TDI	12.06 -			E40-85-008-01-10	A, 18, 20, 22, 45					22		nicht verstellbar *not adjustable*		AS41-85-008-01-VA		T

SKODA

Modell *Model*	Baujahr *Year*	Achslast Vorne kg *Front Axle Load kg*	Achslast Hinten kg *Rear Axle Load kg*	Artikel-Nr. *Part-No.*	Hinweise *Notes*	ab Nachtrag ...xx BE *from suppl. ...xx of type approval*	bis Nachtrag ...xx BE *to suppl. ...xx of type approval*	ca. Tieferl. Vorne mm *ca. Lowering Front mm*	ca. Tieferl. Hinten mm *ca. Lowering Rear mm*	Ø Vorne mm *Ø Front mm*	Ø Hinten mm *Ø Rear mm*	Verstellbarkeit Vorne *Adjustable Front*	Verstellbarkeit Hinten *Adjustable Rear*	Ersatzteilbez. Vorne *Spare Part Marking Front*	Ersatzteilbez. Hinten *Spare Part Marking Rear*	Gutachten *Homologation*
FABIA																
B12 Pro-Kit (Performance Komplettfahrwerke | *Performance Springs+Shocks*)																
1.2, 1.2 12V, 1.2 TSI, 1.4, 1.4 TDI, 1.6, 1.6 TDI	12.06 -	920	840	E90-79-006-01-22	A, 18, 20, 78, 161			30	30					F11-85-008-01-VA	F11-85-008-01-HA	T
1.4 TDI, 1.6 TDI, 1.9 TDI	01.07 -	960	840	E90-79-006-02-22	A, 18, 20, 78, 161			30	30					F11-79-005-01-VA	F11-85-008-01-HA	T
Pro-Street-S (Gewindefahrwerke - höhenverstellbar | *Coil-Overs-Adjustable Ride Hight*)																
1.2, 1.4, 1.4 TDI, 1.6, 1.9 TDI	12.06 - 12.08	890	840	PSS65-79-006-01-22	A, 18, 25, 45, 160			30-60	30-60							T
1.2, 1.2 12V, 1.2 TDI, 1.2 TSI, 1.4, 1.4 TDI, 1.4 TSI, 1.6, 1.6 TDI, 1.9 TDI	01.09 -	925	840	PSS65-79-006-03-22	A, 18, 25, 45, 160			30-60	30-60							T
1.2, 1.2 12V, 1.2 TDI, 1.2 TSI, 1.4, 1.4 TDI, 1.6, 1.6 TDI, 1.9 TDI	12.06 - 12.08	960	840	PSS65-79-006-02-22	A, 18, 25, 45, 160			30-60	30-60							T
1.2, 1.2 12V, 1.2 TDI, 1.2 TSI, 1.4, 1.4 TDI, 1.6, 1.6 TDI, 1.9 TDI	01.09 -	960	840	PSS65-79-006-04-22	A, 18, 25, 45, 160			30-60	30-60							T
1.4 TSI RS	01.09 -	960	840	PSS65-79-006-04-22	A, 18, 25, 45, 160			15-45	15-40							T
FABIA (NJ3)																
Pro-Kit (Performance Fahrwerksfedern | *Performance Springs*)																
1.0, 1.2 TSI	08.14 -	860	840	E10-81-010-04-22	A, 18, 20			30	45					F11-81-010-04-VA	F11-81-010-04-HA	T
1.2 TSI, 1.4 TDI	08.14 -	960	840	E10-81-010-05-22	A, 18, 20			30	45					F11-81-010-05-VA	F11-81-010-04-HA	T
Pro-Street-S (Gewindefahrwerke - höhenverstellbar | *Coil-Overs-Adjustable Ride Hight*)																
1.0, 1.2 TSI, 1.4 TDI	08.14 -	910	840	PSS65-81-010-01-22	A, 24, 25, 45, 160			25-50	36-60							T
FABIA Combi (6Y5) ***FABIA Station Wagon (6Y5)***																
Pro-Kit (Performance Fahrwerksfedern | *Performance Springs*)																
1.2, 1.4, 1.4 16V	04.00 - 12.07	900	875	E10-79-001-01-22	A, 18, 20			30	30					F7910001	F11-79-001-01-HA	T
1.4 TDI, 1.9 SDI, 1.9 TDI, 2.0	04.00 - 12.07	900	875	E10-79-001-02-22	A, 18, 20			30	30					F7911001	F11-79-001-01-HA	T
Anti-Roll-Kit (Performance Stabilisatoren | *Performance Sway Bars*)																
1.2, 1.4, 1.4 16V, 1.4 TDI, 1.9 SDI, 1.9 TDI, 2.0	04.00 - 12.07			E40-85-008-01-10	A, 18, 20, 22, 45					22		nicht verstellbar *not adjustable*		AS41-85-008-01-VA		T
B12 Pro-Kit (Performance Komplettfahrwerke | *Performance Springs+Shocks*)																
1.2, 1.4, 1.4 16V	04.00 - 12.07	900	875	E90-79-001-03-22	A, 18, 20, 78, 161			30	30					F7910001	F11-79-001-01-HA	T
1.4 TDI, 1.9 SDI, 1.9 TDI, 2.0	04.00 - 12.07	900	875	E90-79-001-04-22	A, 18, 20, 78, 161			30	30					F7911001	F11-79-001-01-HA	T
FABIA Praktik																
Pro-Kit (Performance Fahrwerksfedern | *Performance Springs*)																
1.2, 1.4	07.01 - 12.07	900	875	E10-79-011-01-22	A, 18, 20			30	35					F7910001	F11-79-001-01-HA	T
1.4 TDI, 1.9 TDI	07.01 - 12.07	900	875	E10-79-011-02-22	A, 18, 20			30	35					F7911001	F11-79-001-01-HA	T
Anti-Roll-Kit (Performance Stabilisatoren | *Performance Sway Bars*)																
1.2, 1.4, 1.4 TDI, 1.9 TDI	07.01 - 12.07			E40-85-008-01-10	A, 18, 20, 22, 45					22		nicht verstellbar *not adjustable*		AS41-85-008-01-VA		T
B12 Pro-Kit (Performance Komplettfahrwerke | *Performance Springs+Shocks*)																
1.2, 1.4	07.01 - 12.07	900	875	E90-79-001-03-22	A, 18, 20, 78, 161			30	30					F7910001	F11-79-001-01-HA	T
1.4 TDI, 1.9 TDI	07.01 - 12.07	900	875	E90-79-001-04-22	A, 18, 20, 78, 161			30	30					F7911001	F11-79-001-01-HA	T
FABIA Combi ***FABIA Station Wagon***																
Pro-Kit (Performance Fahrwerksfedern | *Performance Springs*)																
1.2, 1.2 12V, 1.2 TSI, 1.4, 1.6	10.07 -	960	840	E10-79-006-05-22	A, 18, 20			30	20					F11-85-008-01-VA	F11-79-001-01-HA	T
1.4 TSI RS	05.10 -	960	840	E10-79-006-10-22	A, 18, 20			20	15					F11-15-014-02-VA	F11-79-001-01-HA	T
1.2 TDI, 1.4 TDI, 1.6 TDI, 1.9 TDI	10.07 -	960	840	E10-79-006-06-22	A, 18, 20			30	20					F11-79-005-01-VA	F11-79-001-01-HA	T
Anti-Roll-Kit (Performance Stabilisatoren | *Performance Sway Bars*)																
1.2, 1.2 12V, 1.2 TDI, 1.2 TSI, 1.4, 1.4 TDI, 1.4 TSI, 1.6, 1.6 TDI, 1.9 TDI	10.07 -			E40-85-008-01-10	A, 18, 20, 22, 45					22		nicht verstellbar *not adjustable*		AS41-85-008-01-VA		T
B12 Pro-Kit (Performance Komplettfahrwerke | *Performance Springs+Shocks*)																
1.2, 1.2 12V, 1.2 TSI, 1.4, 1.6	10.07 -	960	840	E90-79-006-03-22	A, 18, 20, 78, 161			30	20					F11-85-008-01-VA	F11-79-001-01-HA	T
1.2 TDI, 1.4 TDI, 1.6, 1.6 TDI, 1.9 TDI	10.07 -	960	840	E90-79-006-04-22	A, 18, 20, 78, 161			30	20					F11-79-005-01-VA	F11-79-001-01-HA	T
Pro-Street-S (Gewindefahrwerke - höhenverstellbar | *Coil-Overs-Adjustable Ride Hight*)																
1.2, 1.4, 1.4 TDI, 1.6, 1.9 TDI	10.07 - 12.08	890	840	PSS65-79-006-01-22	A, 18, 25, 45, 160			30-60	30-60							T
1.2, 1.2 12V, 1.2 TDI, 1.2 TSI, 1.4, 1.4 TDI, 1.6, 1.6 TDI, 1.9 TDI	01.09 -	925	840	PSS65-79-006-03-22	A, 18, 25, 45, 160			30-60	30-60							T
1.2, 1.4, 1.4 TDI, 1.6, 1.9 TDI	10.07 - 12.08	960	840	PSS65-79-006-02-22	A, 18, 25, 45, 160			30-60	30-60							T
1.2, 1.2 12V, 1.2 TDI, 1.2 TSI, 1.4, 1.4 TDI, 1.6, 1.6 TDI, 1.9 TDI	01.09 -	960	840	PSS65-79-006-04-22	A, 18, 25, 45, 160			30-60	30-60							T
1.4 TSI RS	01.09 -	960	840	PSS65-79-006-04-22	A, 18, 25, 45, 160			15-45	15-40							T
FABIA Combi (NJ5) ***FABIA Station Wagon (NJ5)***																
Pro-Kit (Performance Fahrwerksfedern | *Performance Springs*)																
1.0, 1.2 TSI	10.14 -	860	840	E10-79-011-01-22	A, 18, 20			30	35					F11-81-010-04-VA	F11-85-008-01-HA	T
1.2 TSI, 1.4 TDI	10.14 -	960	840	E10-79-011-02-22	A, 18, 20			30	35					F11-81-010-05-VA	F11-85-008-01-HA	T
Pro-Street-S (Gewindefahrwerke - höhenverstellbar | *Coil-Overs-Adjustable Ride Hight*)																
1.0, 1.2 TSI, 1.4 TDI	10.14 -	910	840	PSS65-81-010-01-22	A, 24, 25, 45, 160			25-50	36-60							T
FABIA Stufenheck (6Y3) ***FABIA Saloon (6Y3)***																
Pro-Kit (Performance Fahrwerksfedern | *Performance Springs*)																
1.2, 1.4, 1.4 16V	10.99 - 12.07	900	875	E10-79-001-01-22	A, 18, 20			30	30					F7910001	F11-79-001-01-HA	T
1.4 TDI, 1.9 SDI, 1.9 TDI, 2.0	11.99 - 12.07	900	875	E10-79-001-02-22	A, 18, 20			30	30					F7911001	F11-79-001-01-HA	T

SKODA

Modell *Model*	Baujahr *Year*	Achslast Vorne kg *Front Axle Load kg*	Achslast Hinten kg *Rear Axle Load kg*	Artikel-Nr. *Part-No.*	Hinweise *Notes*	ab Nachtrag ...xx BE *from suppl. ...xx of type approval*	bis Nachtrag ...xx BE *to suppl. ...xx of type approval*	ca. Tieferl. Vorne mm *ca. Lowering Front mm*	ca. Tieferl. Hinten mm *ca. Lowering Rear mm*	Ø Vorne mm *Ø Front mm*	Ø Hinten mm *Ø Rear mm*	Verstellbarkeit Vorne *Adjustable Front*	Verstellbarkeit Hinten *Adjustable Rear*	Ersatzteilbez. Vorne *Spare Part Marking Front*	Ersatzteilbez. Hinten *Spare Part Marking Rear*	Gutachten *Homologation*
FABIA Stufenheck (6Y3) ***FABIA Saloon (6Y3)***																
Anti-Roll-Kit (Performance Stabilisatoren | *Performance Sway Bars*)																
1.2, 1.4, 1.4 16V, 1.4 TDI, 1.9 SDI, 1.9 TDI, 2.0	10.99 - 12.07			E40-85-008-01-10	A, 18, 20, 22, 45					22		nicht verstellbar *not adjustable*		AS41-85-008-01-VA		T
B12 Pro-Kit (Performance Komplettfahrwerke | *Performance Springs+Shocks*)																
1.2, 1.4, 1.4 16V	10.99 - 12.07	900	875	E90-79-001-03-22	A, 18, 20, 78, 161			30	30					F7910001	F11-79-001-01-HA	T
1.4 TDI, 1.9 SDI, 1.9 TDI, 2.0	11.99 - 12.07	900	875	E90-79-001-04-22	A, 18, 20, 78, 161			30	30					F7911001	F11-79-001-01-HA	T
OCTAVIA (1U2)																
Pro-Kit (Performance Fahrwerksfedern | *Performance Springs*)																
1.4, 1.4 16V, 1.6, 1.9 SDI, 2.0	09.96 - 12.10	1000	1000	E7905-140	A, 18, 20			30	30					F1540001	F7907002	T
1.8, 1.8 T, 1.9 TDI, 2.0	09.96 - 12.10	1000	1000	E7907-140	A, 18, 20			30	30					F1545001	F7907002	T
Sportline (Performance Fahrwerksfedern Sport | *Sport Performance Springs*)																
1.4, 1.4 16V, 1.6, 1.9 SDI, 1.9 TDI, 2.0	09.96 - 12.10	950	1000	E20-79-002-01-22	A, 20			45-50	30					F21-85-001-01-VA	F21-85-001-01-HA	T
1.4, 1.4 16V, 1.6, 1.9 SDI, 1.9 TDI, 2.0	09.96 - 12.10	1000	1000	E20-79-002-02-22	A, 20			45-50	30					F21-85-003-01-VA	F21-85-001-01-HA	T
Anti-Roll-Kit (Performance Stabilisatoren | *Performance Sway Bars*)																
1.4, 1.4 16V, 1.6, 1.9 SDI, 1.9 TDI, 2.0	09.96 - 12.10			E40-85-005-01-10	A, 18, 20, 22, 45					25		nicht verstellbar *not adjustable*		AS41-85-005-01-VA		T
1.4, 1.4 16V, 1.6, 1.9 SDI, 1.9 TDI, 2.0	09.96 - 12.10			E40-85-005-01-11	A, 18, 20, 22, 45					25	25	nicht verstellbar *not adjustable*	nicht verstellbar *not adjustable*	AS41-85-005-01-VA	AS1540320HA	T
B12 Pro-Kit (Performance Komplettfahrwerke | *Performance Springs+Shocks*)																
1.4, 1.4 16V, 1.6, 1.9 SDI	09.96 - 12.10	1000	1000	E90-79-002-01-22	A, 18, 20, 78, 161			30	30					F1540001	F7907002	T
1.8, 1.8 T, 1.9 TDI	09.96 - 12.10	1000	1000	E90-79-002-02-22	A, 18, 20, 78, 161			30	30					F1545001	F7907002	T
2.0	04.99 - 05.07	1000	1000	E90-79-002-02-22	A, 18, 20, 72, 78, 161			30	30					F1545001	F7907002	T
2.0 Schaltgetriebe | *2.0 manual transmission*	04.99 - 05.07	1000	1000	E90-79-002-01-22	A, 18, 20, 72, 78, 161			30	30					F1540001	F7907002	T
B12 Sportline (Performance Komplettfahrwerke Sport | *Sport Performance Springs+Shocks*)																
1.4, 1.4 16V, 1.6, 1.8, 1.8 T, 1.9 SDI, 1.9 TDI, 2.0	09.96 - 12.10	950	1000	E95-79-002-01-22	A, 18, 20, 78, 161			45-50	30					F21-85-001-01-VA	F21-85-001-01-HA	T
1.4, 1.4 16V, 1.6, 1.8, 1.8 T, 1.9 SDI, 1.9 TDI, 2.0	09.96 - 12.10	1000	1000	E95-79-002-02-22	A, 18, 20, 78, 161			45-50	30					F21-85-003-01-VA	F21-85-001-01-HA	T
Pro-Street-S (Gewindefahrwerke - höhenverstellbar | *Coil-Overs-Adjustable Ride Hight*)																
1.8T 4x4	09.96 - 12.10	1030	1070	PSS65-85-001-02-22	A, 24, 25, 45, 160			30-55	30-55							T
1.4, 1.4 16V, 1.6, 1.8, 1.8 T, 1.9 SDI, 1.9 TDI, 2.0	09.96 - 12.10	1020	1080	PSS65-85-001-03-22	A, 20, 24, 25, 26, 45, 160			35-65	35-65							T
OCTAVIA (1Z3)																
Pro-Kit (Performance Fahrwerksfedern | *Performance Springs*)																
1.2 TSI, 1.4, 1.4 TSI, 1.6, 1.6 FSI, 1.6 MultiFuel, 1.6 TDI, 1.8 TSI, 1.9 TDI, 2.0 FSI	02.04 -	1050	1100	E10-79-004-01-22	A, 18, 20			30	30					F11-79-004-01-VA	F11-85-014-05-HA	ABE
2.0 RS, 2.0 TDI RS	10.05 -	1100	1100	E10-79-004-02-22	A, 18, 20			20	20					F11-79-004-02-VA	F11-85-014-05-HA	ABE
1.2 TSI mit DSG, 1.6 TDI, 1.9 TDI, 2.0 FSI, 2.0 TDI, 2.0 TDI 16V *1.2 TSI with DSG, 1.6 TDI, 1.9 TDI, 2.0 FSI, 2.0 TDI, 2.0 TDI 16V*	02.04 -	1100	1100	E10-79-004-02-22	A, 18, 20			30	30					F11-79-004-02-VA	F11-85-014-05-HA	ABE
Anti-Roll-Kit (Performance Stabilisatoren | *Performance Sway Bars*)																
1.2 TSI, 1.4, 1.4 TSI, 1.6, 1.6 FSI, 1.6 MultiFuel, 1.6 TDI, 1.8 TSI, 1.9 TDI, 2.0 FSI, 2.0 RS, 2.0 TDI, 2.0 TDI 16V, 2.0 TDI RS	02.04 -			E40-79-004-01-11	A, 18, 20, 22, 45					26	23	2-fach verstellbar *2-way adjustable*	2-fach verstellbar *2-way adjustable*	AS41-85-014-01-VA	AS41-85-014-01-HA	T
B12 Pro-Kit (Performance Komplettfahrwerke | *Performance Springs+Shocks*)																
1.2 TSI, 1.4, 1.4 TSI, 1.6, 1.6 FSI, 1.8 TSI, 2.0 FSI	02.04 -	1050	1100	E90-79-004-02-22	A, 18, 20, 34, 78, 161			30	30					F11-79-004-01-VA	F11-85-014-05-HA	ABE
1.2 TSI, 1.4, 1.4 TSI, 1.6, 1.6 FSI, 1.8 TSI, 2.0 FSI	02.04 -	1050	1100	E90-79-004-01-22	A, 18, 20, 35, 78, 161			30	30					F11-79-004-01-VA	F11-85-014-05-HA	ABE
1.2 TSI, 1.6 TDI, 1.9 TDI, 2.0 FSI, 2.0 TDI	02.04 -	1100	1100	E90-79-004-04-22	A, 18, 20, 34, 78, 161			30	30					F11-79-004-02-VA	F11-85-014-05-HA	ABE
1.2 TSI, 1.6 TDI, 1.9 TDI, 2.0 FSI, 2.0 TDI	02.04 -	1100	1100	E90-79-004-03-22	A, 18, 20, 35, 78, 161			30	30					F11-79-004-02-VA	F11-85-014-05-HA	ABE
2.0 RS, 2.0 TDI RS	10.05 -	1100	1100	E90-79-004-03-22	A, 18, 20, 35, 78, 161			20	20					F11-79-004-02-VA	F11-85-014-05-HA	ABE
2.0 RS, 2.0 TDI RS	10.05 -	1100	1100	E90-79-004-04-22	A, 18, 20, 34, 78, 161			20	20					F11-79-004-02-VA	F11-85-014-05-HA	ABE
Pro-Street-S (Gewindefahrwerke - höhenverstellbar | *Coil-Overs-Adjustable Ride Hight*)																
1.2 TSI, 1.4, 1.4 TSI, 1.6, 1.6 FSI, 1.6 MultiFuel, 1.6 TDI, 1.8 TSI, 1.9 TDI, 2.0 FSI, 2.0 TDI, 2.0 TDI 16V	06.04 -	1035	1150	PSS65-85-014-01-22	A, 20, 24, 34, 45, 101, 160			35-65	35-65							T
1.2 TSI, 1.4, 1.4 TSI, 1.6, 1.6 FSI, 1.6 MultiFuel, 1.6 TDI, 1.8 TSI, 1.9 TDI, 2.0 FSI, 2.0 TDI, 2.0 TDI 16V	06.04 -	1035	1150	PSS65-85-014-02-22	A, 20, 24, 35, 45, 101, 160			35-65	35-65							T
1.2 TSI, 1.4, 1.4 TSI, 1.6, 1.8 TFSI, 2.0 FSI, 1.6 TDI, 1.9 TDI, 2.0 TDI	06.04 -	1105	1150	PSS65-85-014-03-22	A, 20, 24, 34, 45, 101, 160			35-65	35-65							T
1.2 TSI, 1.4, 1.4 TSI, 1.6, 1.8 TFSI, 2.0 FSI, 1.6 TDI, 1.9 TDI, 2.0 TDI	06.04 -	1105	1150	PSS65-85-014-04-22	A, 20, 24, 35, 45, 101, 160			35-65	35-65							T
1.2 TSI, 1.4, 1.4 TSI, 1.6, 1.8 TFSI, 2.0 FSI, 1.6 TDI, 1.9 TDI, 2.0 TDI	06.04 -	1170	1150	PSS65-85-014-05-22	A, 20, 24, 34, 45, 101, 160			35-65	35-65							T
1.2 TSI, 1.4, 1.4 TSI, 1.6, 1.8 TFSI, 2.0 FSI, 1.6 TDI, 1.9 TDI, 2.0 TDI	06.04 -	1170	1150	PSS65-85-014-06-22	A, 20, 24, 35, 45, 101, 160			35-65	35-65							T
2.0 RS, 2.0 TDI RS	06.04 -	1035	1150	PSS65-85-014-01-22	A, 20, 24, 34, 45, 101, 160			20-50	30-60							T
2.0 RS, 2.0 TDI RS	06.04 -	1035	1150	PSS65-85-014-02-22	A, 20, 24, 35, 45, 101, 160			20-50	30-60							T
2.0 RS, 2.0 TDI RS	06.04 -	1105	1150	PSS65-85-014-03-22	A, 20, 24, 34, 45, 101, 160			20-50	30-60							T
2.0 RS, 2.0 TDI RS	06.04 -	1105	1150	PSS65-85-014-04-22	A, 20, 24, 35, 45, 101, 160			20-50	30-60							T
2.0 RS, 2.0 TDI RS	06.04 -	1170	1150	PSS65-85-014-05-22	A, 20, 24, 34, 45, 101, 160			20-50	30-60							T
2.0 RS, 2.0 TDI RS	06.04 -	1170	1150	PSS65-85-014-06-22	A, 20, 24, 35, 45, 101, 160			20-50	30-60							T

SKODA

Modell *Model*	Baujahr *Year*	Achslast Vorne kg *Front Axle Load kg*	Achslast Hinten kg *Rear Axle Load kg*	Artikel-Nr. *Part-No.*	Hinweise *Notes*	ab Nachtrag ...xx BE *from suppl. ...xx of type approval*	bis Nachtrag ...xx BE *to suppl. ...xx of type approval*	ca. Tieferl. Vorne mm *ca. Lowering Front mm*	ca. Tieferl. Hinten mm *ca. Lowering Rear mm*	Ø Vorne mm *Ø Front mm*	Ø Hinten mm *Ø Rear mm*	Verstellbarkeit Vorne *Adjustable Front*	Verstellbarkeit Hinten *Adjustable Rear*	Ersatzteilbez. Vorne *Spare Part Marking Front*	Ersatzteilbez. Hinten *Spare Part Marking Rear*	Gutachten *Homologation*
OCTAVIA (5E3)																
Pro-Kit (Performance Fahrwerksfedern | *Performance Springs*)																
1.2 TSI, 1.4 TSI, 1.6 TDI, 1.8 TSI	11.12 -	985	1030	E10-79-010-03-22	A, 18, 20, 171			30-40	30					F11-15-021-01-VA	F11-70-012-01-HA	T
1.8 TSI, 1.6 TDI, 2.0 TDI	11.12 -	1070	1030	E10-79-010-04-22	A, 18, 20, 171			30-40	30					F11-15-021-02-VA	F11-70-012-01-HA	T
1.2 TSI, 1.4 TSI, 1.6 TDI, 1.8 TSI	11.12 -	985	1075	E10-79-010-01-22	A, 18, 20, 170			30-40	30					F11-15-021-01-VA	F11-15-007-15-HA	T
1.8 TSI, 1.6 TDI, 2.0 TDI	11.12 -	1070	1075	E10-79-010-02-22	A, 18, 20, 170			30-40	30					F11-15-021-02-VA	F11-15-007-15-HA	T
2.0 TSI RS, 2.0 TDI RS	11.12 -	1070	1075	E10-79-010-02-22	A, 18, 20, 170			20	10					F11-15-021-02-VA	F11-15-007-15-HA	T
Sportline (Performance Fahrwerksfedern Sport | *Sport Performance Springs*)																
1.2 TSI, 1.4 TSI, 1.6 TDI, 1.8 TSI, 2.0 TDI	11.12 -	970	1010	E20-15-021-03-22	A, 18, 20, 171			40-50	45					F21-15-021-01-VA	F21-15-021-03-HA	T
1.6 TDI, 2.0 TDI	11.12 -	1070	1010	E20-15-021-04-22	A, 18, 20, 171			40-50	45					F21-15-021-02-VA	F21-15-021-03-HA	T
1.6 TDI, 2.0 TDI	11.12 -	1070	1075	E20-15-021-05-22	A, 18, 20, 170			40-50	45					F21-15-021-02-VA	F21-15-021-05-HA	T
2.0 TSI RS, 2.0 TDI RS	11.12 -	1070	1075	E20-15-021-05-22	A, 18, 20, 170			25-30	25					F21-15-021-02-VA	F21-15-021-05-HA	T
1.2 TSI, 1.4 TSI, 1.8 TSI, 1.6 TDI, 2.0 TDI	11.12 -	970	1075	E20-79-010-01-22	A, 18, 20, 170			40-50	45					F21-15-021-01-VA	F21-15-021-05-HA	T
Anti-Roll-Kit (Performance Stabilisatoren | *Performance Sway Bars*)																
1.2 TSI, 1.4 TSI, 1.6 TDI, 1.8 TSI, 2.0 TSI RS	11.12 -			E40-15-021-01-11	A, 18, 20, 22, 45, 170					28 Rohr *28 tube*	25 Rohr *25 tube*	2-fach verstellbar *2-way adjustable*	nicht verstellbar *not adjustable*	AS41-15-021-01-VA	AS41-15-021-01-HA	T
1.8 TSI 4x4, 1.6 TDI 4x4, 2.0 TDI 4x4	11.12 -			E40-15-021-02-11	A, 18, 22, 45, 170					28 Rohr *28 tube*	25 Rohr *25 tube*	2-fach verstellbar *2-way adjustable*	2-fach verstellbar *2-way adjustable*	AS41-15-021-02-VA	AS41-15-021-02-HA	T
1.2 TSI, 1.4 TSI, 1.6 TDI, 1.8 TSI, 2.0 TDI	11.12 -			E40-15-021-03-11	A, 18, 20, 22, 45, 171					28 Rohr *28 tube*	25	2-fach verstellbar *2-way adjustable*	nicht verstellbar *not adjustable*	AS41-15-021-01-VA	AS41-15-021-03-HA	T
B12 Pro-Kit (Performance Komplettfahrwerke | *Performance Springs+Shocks*)																
1.2 TSI, 1.4 TSI, 1.6 TDI, 1.8 TSI	11.12 -	985	1075	E90-79-010-01-22	A, 18, 20, 35, 78, 161, 170, 188			30-40	30					F11-15-021-01-VA	F11-15-007-15-HA	T
1.8 TSI, 1.6 TDI, 2.0 TDI	11.12 -	1070	1075	E90-79-010-02-22	A, 18, 20, 35, 78, 161, 170, 188			30-40	30					F11-15-021-02-VA	F11-15-007-15-HA	T
2.0 TSI RS, 2.0 TDI RS	11.12 -	1070	1075	E90-79-010-02-22	A, 18, 20, 35, 78, 161, 170, 188			20	10					F11-15-021-02-VA	F11-15-007-15-HA	T
1.2 TSI, 1.4 TSI, 1.8 TSI, 1.6 TDI	11.12 -	985	1030	E90-79-010-03-22	A, 18, 20, 35, 78, 161, 171, 189			30-40	30					F11-15-021-01-VA	F11-70-012-01-HA	T
1.8 TSI, 1.6 TDI, 2.0 TDI	11.12 -	1070	1030	E90-79-010-04-22	A, 18, 20, 35, 78, 161, 171, 189			30-40	30					F11-15-021-02-VA	F11-70-012-01-HA	T
1.2 TSI, 1.4 TSI, 1.6 TDI, 1.8 TSI	11.12 -	985	1075	E90-79-010-05-22	A, 18, 20, 34, 78, 161, 170, 190			30-40	30					F11-15-021-01-VA	F11-15-007-15-HA	T
1.8 TSI, 1.6 TDI, 2.0 TDI	11.12 -	1070	1075	E90-79-010-06-22	A, 18, 20, 34, 78, 161, 170, 190			30-40	30					F11-15-021-02-VA	F11-15-007-15-HA	T
2.0 TSI RS, 2.0 TDI RS	11.12 -	1070	1075	E90-79-010-06-22	A, 18, 20, 34, 78, 161, 170, 190			20	10					F11-15-021-02-VA	F11-15-007-15-HA	T
1.2 TSI, 1.4 TSI, 1.6 TDI, 1.8 TSI	11.12 -	985	1030	E90-79-010-07-22	A, 18, 20, 34, 78, 161, 171, 191			30-40	30					F11-15-021-01-VA	F11-70-012-01-HA	T
1.8 TSI, 1.6 TDI, 2.0 TDI	11.12 -	1070	1030	E90-79-010-08-22	A, 18, 20, 34, 78, 161, 171, 191			30-40	30					F11-15-021-02-VA	F11-70-012-01-HA	T
B12 Sportline (Performance Komplettfahrwerke Sport | *Sport Performance Springs+Shocks*)																
1.2 TSI, 1.4 TSI, 1.8 TSI, 1.6 TDI, 2.0 TDI	11.12 -	970	1010	E95-15-021-03-22	A, 18, 20, 35, 78, 161, 171, 204			40-50	45					F21-15-021-01-VA	F21-15-021-03-HA	T
1.6 TDI, 2.0 TDI	11.12 -	1070	1010	E95-15-021-04-22	A, 18, 20, 35, 78, 161, 171, 204			40-50	45					F21-15-021-02-VA	F21-15-021-03-HA	T
1.6 TDI, 2.0 TDI	11.12 -	1070	1075	E95-15-021-05-22	A, 18, 20, 35, 78, 161, 170, 205			40-50	45					F21-15-021-02-VA	F21-15-021-05-HA	T
2.0 TSI RS, 2.0 TDI RS	11.12 -	1070	1075	E95-15-021-05-22	A, 18, 20, 35, 78, 161, 170, 205			25-30	25					F21-15-021-02-VA	F21-15-021-05-HA	T
1.2 TSI, 1.4 TSI, 1.8 TSI, 1.6 TDI, 2.0 TDI	11.12 -	970	1075	E95-79-010-01-22	A, 18, 20, 35, 78, 161, 170, 205			40-50	45					F21-15-021-01-VA	F21-15-021-05-HA	T
1.2 TSI, 1.4 TSI, 1.8 TSI, 1.6 TDI, 2.0 TDI	11.12 -	970	1010	E95-15-021-20-22	A, 18, 20, 34, 78, 161, 171, 204			40-50	45					F21-15-021-01-VA	F21-15-021-03-HA	T
1.6 TDI, 2.0 TDI	11.12 -	1070	1010	E95-15-021-07-22	A, 18, 20, 34, 78, 161, 171, 204			40-50	45					F21-15-021-02-VA	F21-15-021-03-HA	T
1.6 TDI, 2.0 TDI	11.12 -	1070	1075	E95-15-021-08-22	A, 18, 20, 34, 78, 161, 170, 205			40-50	45					F21-15-021-02-VA	F21-15-021-05-HA	T
2.0 TSI RS, 2.0 TDI RS	11.12 -	1070	1075	E95-15-021-08-22	A, 18, 20, 34, 78, 161, 170, 205			25-30	25					F21-15-021-02-VA	F21-15-021-05-HA	T
1.2 TSI, 1.4 TSI, 1.8 TSI, 1.6 TDI, 2.0 TDI	11.12 -	970	1075	E95-79-010-05-22	A, 18, 20, 34, 78, 161, 170, 205			40-50	45					F21-15-021-01-VA	F21-15-021-05-HA	T
Pro-Street-S (Gewindefahrwerke - höhenverstellbar | *Coil-Overs-Adjustable Ride Hight*)																
1.2 TSI, 1.4 TSI, 1.6 TDI, 1.8 TSI	11.12 -	925	980	PSS65-15-021-07-22	A,24,25,35,45, 160, 171			35-65	30-60							T
1.8 TSI, 1.6 TDI, 2.0 TDI	11.12 -	1060	980	PSS65-15-021-08-22	A,24,25,35,45, 160, 171			35-65	30-60							T
2.0 TSI RS, 2.0 TDI RS	11.12 -	1090	1025	PSS65-15-021-05-22	A,24,25,34,45, 160, 170			10-40	15-40							T
1.2 TSI, 1.4 TSI, 1.6 TDI, 1.8 TSI	11.12 -	925	1050	PSS65-15-021-12-22	A, 24, 25, 34, 45, 160, 170			35-65	35-65							T

SKODA

Modell	Baujahr	Achslast Vorne kg	Achslast Hinten kg	Artikel-Nr.	Hinweise	ab Nachtrag ...xx BE	bis Nachtrag ...xx BE	ca. Tieferl. Vorne mm	ca. Tieferl. Hinten mm	Ø Vorne mm	Ø Hinten mm	Verstellbarkeit Vorne	Verstellbarkeit Hinten	Ersatzteilbez. Vorne	Ersatzteilbez. Hinten	Gutachten
Model	*Year*	*Front Axle Load kg*	*Rear Axle Load kg*	*Part-No.*	*Notes*	*from suppl. ...xx of type approval*	*to suppl. ...xx of type approval*	*ca. Lowering Front mm*	*ca. Lowering Rear mm*	*Ø Front mm*	*Ø Rear mm*	*Adjustable Front*	*Adjustable Rear*	*Spare Part Marking Front*	*Spare Part Marking Rear*	*Homologation*
OCTAVIA (5E3)																
Pro-Street-S (Gewindefahrwerke - höhenverstellbar | *Coil-Overs-Adjustable Ride Hight*)																
1.8 TSI, 1.6 TDI, 2.0 TDI	11.12 -	1090	1050	PSS65-15-021-13-22	A, 24, 25, 34, 45, 160, 170			35-65	35-65							T
1.2 TSI, 1.4 TSI, 1.6 TDI, 1.8 TSI	11.12 -	925	1050	PSS65-15-021-14-22	A, 24, 25, 35, 45, 160, 170			35-65	35-65							T
1.8 TSI, 1.6 TDI, 2.0 TDI	11.12 -	1090	1050	PSS65-15-021-15-22	A, 24, 25, 35, 45, 160, 170			35-65	35-65							T
OCTAVIA Combi (1U5) ***OCTAVIA Station Wagon (1U5)***																
Pro-Kit (Performance Fahrwerksfedern | *Performance Springs*)																
1.4 16V, 1.6, 2.0 Schaltgetriebe, 1.9 SDI *1.4 16V, 1.6, 2.0 manual transmission, 1.9 SDI*	07.98 - 12.10	1000	1020	E7908-140	A, 18, 20			30	30					F1540001	F7908002	T
1.8 20V, 1.8 T, 2.0 Automatik, 1.9 TDI *1.8, 1.8 T, 2.0 automatic transmission, 1.9 TDI*	07.98 - 12.10	1000	1020	E7909-140	A, 18, 20			30	30					F1545001	F7908002	T
Anti-Roll-Kit (Performance Stabilisatoren | *Performance Sway Bars*)																
1.4 16V, 1.6, 1.9 SDI, 1.9 TDI, 2.0	07.98 - 12.10			E40-85-005-01-11	A, 18, 20, 22, 45					25	25	nicht verstellbar *not adjustable*	nicht verstellbar *not adjustable*	AS41-85-005-01-VA	AS1540320HA	T
B12 Pro-Kit (Performance Komplettfahrwerke | *Performance Springs+Shocks*)																
2.0 Schaltgetriebe *2.0 manual transmission*	04.99 - 12.10	1000	1020	E90-79-002-03-22	A, 18, 71, 78, 161			30	30					F1540001	F7908002	T
2.0 Automatik *2.0 automatic transmission*	04.99 - 12.10	1000	1020	E90-79-002-04-22	A, 18, 72, 78, 161			30	30					F1545001	F7908002	T
1.4 16V, 1.6, 1.9 SDI	07.98 - 12.10	1000	1020	E90-79-002-03-22	A, 18, 20, 78, 161			30	30					F1540001	F7908002	T
1.8 20V, 1.8 T, 1.9 TDI	07.98 - 12.10	1020	1020	E90-79-002-04-22	A, 18, 20, 78, 161			30	30					F1545001	F7908002	T
Pro-Street-S (Gewindefahrwerke - höhenverstellbar | *Coil-Overs-Adjustable Ride Hight*)																
1.8T 4x4, 2.0 4x4, 1.9 TDI 4x4	07.98 - 12.10	1030	1070	PSS65-85-001-02-22	A, 24, 25, 45, 160			30-55	30-55							T
1.4 16V, 1.6, 1.8 20V, 1.8 T, 1.9 SDI, 1.9 TDI, 2.0	07.98 - 12.10	1020	1080	PSS65-85-001-03-22	A, 20, 24, 25, 26, 45, 160			35-65	35-65							T
OCTAVIA Combi (1Z5) ***OCTAVIA Station Wagon (1Z5)***																
Pro-Kit (Performance Fahrwerksfedern | *Performance Springs*)																
1.2 TSI, 1.4, 1.4 TSI, 1.6, 1.6 FSI, 1.6 MultiFuel, 1.6 TDI, 1.8 TSI, 1.9 TDI, 2.0 FSI	02.04 -	1050	1150	E10-79-004-03-22	A, 18, 20			30	30					F11-79-004-01-VA	F11-15-007-01-HA	ABE
2.0 RS, 2.0 TDI RS	10.05 -	1100	1150	E10-79-004-04-22	A, 18, 20			20	20					F11-79-004-02-VA	F11-15-007-01-HA	ABE
1.2 TSI mit DSG, 1.6 TDI, 1.9 TDI, 2.0 FSI, 2.0 TDI, 2.0 TDI 16V *1.2 TSI with DSG, 1.6 TDI, 1.9 TDI, 2.0 FSI, 2.0 TDI, 2.0 TDI 16V*	02.04 -	1100	1150	E10-79-004-04-22	A, 18, 20			30	30					F11-79-004-02-VA	F11-15-007-01-HA	ABE
Anti-Roll-Kit (Performance Stabilisatoren | *Performance Sway Bars*)																
1.2 TSI, 1.4, 1.4 TSI, 1.6, 1.6 FSI, 1.6 MultiFuel, 1.6 TDI, 1.8 TSI, 1.9 TDI, 2.0 FSI, 2.0 RS, 2.0 TDI, 2.0 TDI 16V, 2.0 TDI RS	02.04 -			E40-79-004-01-11	A, 18, 20, 22, 45					26	23	2-fach verstellbar *2-way adjustable*	2-fach verstellbar *2-way adjustable*	AS41-85-014-01-VA	AS41-85-014-01-HA	T
B12 Pro-Kit (Performance Komplettfahrwerke | *Performance Springs+Shocks*)																
1.2 TSI, 1.4, 1.4 TSI, 1.6, 1.6 FSI, 1.8 TSI	02.04 -	1050	1150	E90-79-004-06-22	A, 18, 20, 34, 78, 161			30	30					F11-79-004-01-VA	F11-15-007-01-HA	ABE
1.2 TSI, 1.4, 1.4 TSI, 1.6, 1.6 FSI, 1.8 TSI	02.04 -	1050	1150	E90-79-004-05-22	A, 18, 20, 35, 78, 161			30	30					F11-79-004-01-VA	F11-15-007-01-HA	ABE
1.2 TSI, 1.6 TDI, 1.9 TDI, 2.0 FSI, 2.0 TDI, 2.0 TDI 16V	02.04 -	1100	1150	E90-79-004-08-22	A, 18, 20, 34, 78, 161			30	30					F11-79-004-02-VA	F11-15-007-01-HA	ABE
1.2 TSI, 1.6 TDI, 1.9 TDI, 2.0 FSI, 2.0 TDI, 2.0 TDI 16V	02.04 -	1100	1150	E90-79-004-07-22	A, 18, 20, 35, 78, 161			30	30					F11-79-004-02-VA	F11-15-007-01-HA	ABE
2.0 RS, 2.0 TDI RS	01.06 -	1100	1150	E90-79-004-08-22	A, 18, 20, 34, 78, 161			20	20					F11-79-004-02-VA	F11-15-007-01-HA	ABE
2.0 RS, 2.0 TDI RS	01.06 -	1100	1150	E90-79-004-07-22	A, 18, 20, 35, 78, 161			20	20					F11-79-004-02-VA	F11-15-007-01-HA	ABE
Pro-Street-S (Gewindefahrwerke - höhenverstellbar | *Coil-Overs-Adjustable Ride Hight*)																
1.2 TSI, 1.4, 1.4 TSI, 1.6, 1.6 FSI, 1.6 MultiFuel, 1.6 TDI, 1.8 TSI, 1.9 TDI, 2.0 FSI, 2.0 TDI, 2.0 TDI 16V, 2.0 TDI RS	02.04 -	1035	1150	PSS65-85-014-01-22	A, 20, 24, 34, 45, 101, 160			35-65	35-65							T
1.2 TSI, 1.4, 1.4 TSI, 1.6, 1.6 FSI, 1.6 MultiFuel, 1.6 TDI, 1.8 TSI, 1.9 TDI, 2.0 FSI, 2.0 TDI, 2.0 TDI 16V, 2.0 TDI RS	02.04 -	1035	1150	PSS65-85-014-02-22	A, 20, 24, 35, 45, 101, 160			35-65	35-65							T
2.0 RS	10.05 -	1035	1150	PSS65-85-014-01-22	A, 20, 24, 34, 45, 101, 160			20-50	30-60							T
2.0 RS	10.05 -	1035	1150	PSS65-85-014-02-22	A, 20, 24, 35, 45, 101, 160			20-50	30-60							T
1.2 TSI, 1.4, 1.4 TSI, 1.6, 1.6 FSI, 1.6 MultiFuel, 1.6 TDI, 1.8 TSI, 1.9 TDI, 2.0 FSI, 2.0 TDI, 2.0 TDI 16V, 2.0 TDI RS	02.04 -	1105	1150	PSS65-85-014-03-22	A, 20, 24, 34, 45, 101, 160			35-65	35-65							T
1.2 TSI, 1.4, 1.4 TSI, 1.6, 1.6 FSI, 1.6 MultiFuel, 1.6 TDI, 1.8 TSI, 1.9 TDI, 2.0 FSI, 2.0 TDI, 2.0 TDI 16V, 2.0 TDI RS	02.04 -	1105	1150	PSS65-85-014-04-22	A, 20, 24, 35, 45, 101, 160			35-65	35-65							T
2.0 RS	10.05 -	1105	1150	PSS65-85-014-03-22	A, 20, 24, 34, 45, 101, 160			20-50	30-60							T
2.0 RS	10.05 -	1105	1150	PSS65-85-014-04-22	A, 20, 24, 35, 45, 101, 160			20-50	30-60							T
1.2 TSI, 1.4, 1.4 TSI, 1.6, 1.6 FSI, 1.6 MultiFuel, 1.6 TDI, 1.8 TSI, 1.9 TDI, 2.0 FSI, 2.0 TDI, 2.0 TDI 16V, 2.0 TDI RS	02.04 -	1170	1150	PSS65-85-014-05-22	A, 20, 24, 34, 45, 101, 160			35-65	35-65							T
1.2 TSI, 1.4, 1.4 TSI, 1.6, 1.6 FSI, 1.6 MultiFuel, 1.6 TDI, 1.8 TSI, 1.9 TDI, 2.0 FSI, 2.0 TDI, 2.0 TDI 16V, 2.0 TDI RS	02.04 -	1170	1150	PSS65-85-014-06-22	A, 20, 24, 35, 45, 101, 160			35-65	35-65							T
2.0 RS	10.05 -	1170	1150	PSS65-85-014-05-22	A, 20, 24, 34, 45, 101, 160			20-50	30-60							T
2.0 RS	10.05 -	1170	1150	PSS65-85-014-06-22	A, 20, 24, 35, 45, 101, 160			20-50	30-60							T
OCTAVIA Combi (5E5) ***OCTAVIA Station Wagon (5E5)***																
Pro-Kit (Performance Fahrwerksfedern | *Performance Springs*)																
1.2 TSI, 1.4 TSI, 1.6 TDI, 1.8 TSI	11.12 -	985	1075	E10-79-010-01-22	A, 18, 20, 170			30-40	30					F11-15-021-01-VA	F11-15-007-15-HA	T
1.2 TSI, 1.4 TSI, 1.6 TDI, 1.8 TSI	11.12 -	985	1030	E10-79-010-03-22	A, 18, 20, 171			30-40	30					F11-15-021-01-VA	F11-70-012-01-HA	T
1.6 TDI, 1.8 TSI, 2.0 TDI	11.12 -	1070	1075	E10-79-010-02-22	A, 18, 20, 170			30-40	30					F11-15-021-02-VA	F11-15-007-15-HA	T

SKODA

SKODA

Modell	Baujahr	Achslast Vorne kg	Achslast Hinten kg	Artikel-Nr.	Hinweise	ab Nachtrag ...xx BE	bis Nachtrag ...xx BE	ca. Tieferl. Vorne mm	ca. Tieferl. Hinten mm	Ø Vorne mm	Ø Hinten mm	Verstellbarkeit Vorne	Verstellbarkeit Hinten	Ersatzteilbez. Vorne	Ersatzteilbez. Hinten	Gutachten
Model	*Year*	*Front Axle Load kg*	*Rear Axle Load kg*	*Part-No.*	*Notes*	*from suppl. ...xx of type approval*	*to suppl. ...xx of type approval*	*ca. Lowering Front mm*	*ca. Lowering Rear mm*	*Ø Front mm*	*Ø Rear mm*	*Adjustable Front*	*Adjustable Rear*	*Spare Part Marking Front*	*Spare Part Marking Rear*	*Homologation*
OCTAVIA Combi (5E5) ***OCTAVIA Station Wagon (5E5)***																
Pro-Kit (Performance Fahrwerksfedern | *Performance Springs*)																
1.6 TDI, 1.8 TSI, 2.0 TDI	11.12 -	1070	1030	E10-79-010-04-22	A, 18, 20, 171			30-40	30					F11-15-021-02-VA	F11-70-012-01-HA	T
2.0 TSI RS, 2.0 TDI RS	11.12 -	1070	1075	E10-79-010-02-22	A, 18, 20, 170			20	10					F11-15-021-02-VA	F11-15-007-15-HA	T
Sportline (Performance Fahrwerksfedern Sport | *Sport Performance Springs*)																
1.2 TSI, 1.4 TSI, 1.8 TSI, 1.8 TSI 4x4, 1.6 TDI, 2.0 TDI	11.12 -	970	1010	E20-15-021-03-22	A, 18, 20, 171			40-50	45					F21-15-021-01-VA	F21-15-021-03-HA	T
1.6 TDI, 2.0 TDI	11.12 -	1070	1010	E20-15-021-04-22	A, 18, 20, 171			40-50	45					F21-15-021-02-VA	F21-15-021-03-HA	T
1.6 TDI, 2.0 TDI	11.12 -	1070	1075	E20-15-021-05-22	A, 18, 20, 170			40-50	45					F21-15-021-02-VA	F21-15-021-05-HA	T
2.0 TSI RS, 2.0 TDI RS	11.12 -	1070	1075	E20-15-021-05-22	A, 18, 20, 170			25-30	25					F21-15-021-02-VA	F21-15-021-05-HA	T
1.2 TSI, 1.4 TSI, 1.8 TSI, 1.6 TDI, 2.0 TDI	11.12 -	970	1075	E20-79-010-01-22	A, 18, 20, 170			40-50	45					F21-15-021-01-VA	F21-15-021-05-HA	T
Anti-Roll-Kit (Performance Stabilisatoren | *Performance Sway Bars*)																
1.2 TSI, 1.4 TSI, 1.6 TDI, 1.8 TSI, 2.0 TDI, 2.0 TSI RS	11.12 -			E40-15-021-01-11	A, 18, 20, 22, 45, 170					28 Rohr 28 *tube*	25 Rohr 25 *tube*	2-fach verstellbar *2-way adjustable*	nicht verstellbar *not adjustable*	AS41-15-021-01-VA	AS41-15-021-01-HA	T
1.8 TSI 4x4, 1.6 TDI 4x4, 2.0 TDI 4x4	11.12 -			E40-15-021-02-11	A, 18, 22, 45, 170					28 Rohr 28 *tube*	25 Rohr 25 *tube*	2-fach verstellbar *2-way adjustable*	2-fach verstellbar *2-way adjustable*	AS41-15-021-02-VA	AS41-15-021-02-HA	T
1.2 TSI, 1.4 TSI, 1.6 TDI, 1.8 TSI, 2.0 TDI	11.12 -			E40-15-021-03-11	A, 18, 20, 22, 45, 171					28 Rohr 28 *tube*	25	2-fach verstellbar *2-way adjustable*	nicht verstellbar *not adjustable*	AS41-15-021-01-VA	AS41-15-021-03-HA	T
B12 Pro-Kit (Performance Komplettfahrwerke | *Performance Springs+Shocks*)																
1.2 TSI, 1.4 TSI, 1.6 TDI, 1.8 TSI	11.12 -	985	1075	E90-79-010-01-22	A, 18, 20, 35, 78, 161, 170, 188			30-40	30					F11-15-021-01-VA	F11-15-007-15-HA	T
1.6 TDI, 1.8 TSI, 2.0 TDI	11.12 -	1070	1075	E90-79-010-02-22	A, 18, 20, 35, 78, 161, 170, 188			30-40	30					F11-15-021-02-VA	F11-15-007-15-HA	T
2.0 TSI RS, 2.0 TDI RS	11.12 -	1070	1075	E90-79-010-02-22	A, 18, 20, 35, 78, 161, 170, 188			20	10					F11-15-021-02-VA	F11-15-007-15-HA	T
1.2 TSI, 1.4 TSI, 1.6 TDI, 1.8 TSI	11.12 -	985	1030	E90-79-010-03-22	A, 18, 20, 35, 78, 161, 171, 189			30-40	30					F11-15-021-01-VA	F11-70-012-01-HA	T
1.6 TDI, 1.8 TSI, 2.0 TDI	11.12 -	1070	1030	E90-79-010-04-22	A, 18, 20, 35, 78, 161, 171, 189			30-40	30					F11-15-021-02-VA	F11-70-012-01-HA	T
1.2 TSI, 1.4 TSI, 1.6 TDI, 1.8 TSI	11.12 -	985	1075	E90-79-010-05-22	A, 18, 20, 34, 78, 161, 170, 190			30-40	30					F11-15-021-01-VA	F11-15-007-15-HA	T
1.6 TDI, 1.8 TSI, 2.0 TDI	11.12 -	1070	1075	E90-79-010-06-22	A, 18, 20, 34, 78, 161, 170, 190			30-40	30					F11-15-021-02-VA	F11-15-007-15-HA	T
2.0 TSI RS, 2.0 TDI RS	11.12 -	1070	1075	E90-79-010-06-22	A, 18, 20, 34, 78, 161, 170, 190			20	10					F11-15-021-02-VA	F11-15-007-15-HA	T
1.2 TSI, 1.4 TSI, 1.6 TDI, 1.8 TSI	11.12 -	985	1030	E90-79-010-07-22	A, 18, 20, 34, 78, 161, 171, 191			30-40	30					F11-15-021-01-VA	F11-70-012-01-HA	T
1.6 TDI, 1.8 TSI, 2.0 TDI	11.12 -	1070	1030	E90-79-010-08-22	A, 18, 20, 34, 78, 161, 171, 191			30-40	30					F11-15-021-02-VA	F11-70-012-01-HA	T
B12 Sportline (Performance Komplettfahrwerke Sport | *Sport Performance Springs+Shocks*)																
1.2 TSI, 1.4 TSI, 1.8 TSI, 1.6 TDI, 2.0 TDI	11.12 -	970	1010	E95-15-021-03-22	A, 18, 20, 35, 78, 161, 171, 204			40-50	45					F21-15-021-01-VA	F21-15-021-03-HA	T
1.6 TDI, 2.0 TDI	11.12 -	1070	1010	E95-15-021-04-22	A, 18, 20, 35, 78, 161, 171, 204			40-50	45					F21-15-021-02-VA	F21-15-021-03-HA	T
1.6 TDI, 2.0 TDI	11.12 -	1070	1075	E95-15-021-05-22	A, 18, 20, 35, 78, 161, 170, 205			40-50	45					F21-15-021-02-VA	F21-15-021-05-HA	T
2.0 TSI RS, 2.0 TDI RS	11.12 -	1070	1075	E95-15-021-05-22	A, 18, 20, 35, 78, 161, 170, 205			25-30	25					F21-15-021-02-VA	F21-15-021-05-HA	T
1.2 TSI, 1.4 TSI, 1.8 TSI, 1.6 TDI, 2.0 TDI	11.12 -	970	1075	E95-79-010-01-22	A, 18, 20, 35, 78, 161, 170, 205			40-50	45					F21-15-021-01-VA	F21-15-021-05-HA	T
1.2 TSI, 1.4 TSI, 1.8 TSI, 1.6 TDI, 2.0 TDI	11.12 -	970	1010	E95-15-021-20-22	A, 18, 20, 34, 78, 161, 171, 204			40-50	45					F21-15-021-01-VA	F21-15-021-03-HA	T
1.6 TDI, 2.0 TDI	11.12 -	1070	1010	E95-15-021-07-22	A, 18, 20, 34, 78, 161, 171, 204			40-50	45					F21-15-021-02-VA	F21-15-021-03-HA	T
1.6 TDI, 2.0 TDI	11.12 -	1070	1075	E95-15-021-08-22	A, 18, 20, 34, 78, 161, 170, 205			40-50	45					F21-15-021-02-VA	F21-15-021-05-HA	T
2.0 TSI RS, 2.0 TDI RS	11.12 -	1070	1075	E95-15-021-08-22	A, 18, 20, 34, 78, 161, 170, 205			25-30	25					F21-15-021-02-VA	F21-15-021-05-HA	T
1.2 TSI, 1.4 TSI, 1.8 TSI, 1.6 TDI, 2.0 TDI	11.12 -	970	1075	E95-79-010-05-22	A, 18, 20, 34, 78, 161, 170, 205			40-50	45					F21-15-021-01-VA	F21-15-021-05-HA	T
Pro-Street-S (Gewindefahrwerke - höhenverstellbar | *Coil-Overs-Adjustable Ride Hight*)																
1.2 TSI, 1.4 TSI, 1.6 TDI, 1.8 TSI	11.12 -	925	980	PSS65-15-021-07-22	A, 24, 25, 35, 45, 160, 171			35-65	30-60							T
1.8 TSI, 1.6 TDI, 2.0 TDI	11.12 -	1060	980	PSS65-15-021-08-22	A, 24, 25, 35, 45, 160, 171			35-65	30-60							T
2.0 TSI RS, 2.0 TDI RS	11.12 -	1090	1025	PSS65-15-021-05-22	A, 24, 25, 34, 45, 160, 170			10-40	15-40							T
1.2 TSI, 1.4 TSI, 1.6 TDI, 1.8 TSI	11.12 -	925	1050	PSS65-15-021-12-22	A, 24, 25, 34, 45, 160, 170			35-65	35-65							T
1.8 TSI, 1.6 TDI, 2.0 TDI	11.12 -	1090	1050	PSS65-15-021-13-22	A, 24, 25, 34, 45, 160, 170			35-65	35-65							T
1.2 TSI, 1.4 TSI, 1.6 TDI, 1.8 TSI	11.12 -	925	1050	PSS65-15-021-14-22	A, 24, 25, 35, 45, 160, 170			35-65	35-65							T
1.8 TSI, 1.6 TDI, 2.0 TDI	11.12 -	1090	1050	PSS65-15-021-15-22	A, 24, 25, 35, 45, 160, 170			35-65	35-65							T

SKODA

Modell *Model*	Baujahr *Year*	Achslast Vorne kg *Front Axle Load kg*	Achslast Hinten kg *Rear Axle Load kg*	Artikel-Nr. *Part-No.*	Hinweise *Notes*	ab Nachtrag ...xx BE *from suppl. ...xx of type approval*	bis Nachtrag ...xx BE *to suppl. ...xx of type approval*	ca. Tieferl. Vorne mm *ca. Lowering Front mm*	ca. Tieferl. Hinten mm *ca. Lowering Rear mm*	Ø Vorne mm *Ø Front mm*	Ø Hinten mm *Ø Rear mm*	Verstellbarkeit Vorne *Adjustable Front*	Verstellbarkeit Hinten *Adjustable Rear*	Ersatzteilbez. Vorne *Spare Part Marking Front*	Ersatzteilbez. Hinten *Spare Part Marking Rear*	Gutachten *Homologation*
RAPID																
Pro-Kit (Performance Fahrwerksfedern | *Performance Springs*)																
1.2, 1.2 TSI	07.12 -	880	860	E10-79-009-01-22	A, 18, 20			30	30					F11-15-014-01-VA	F1540002	T
1.4 TSI, 1.6, 1.4 TDI, 1.6 TDI	07.12 -	960	860	E10-79-009-02-22	A, 18, 20			30	30					F11-81-010-05-VA	F1540002	T
Anti-Roll-Kit (Performance Stabilisatoren | *Performance Sway Bars*)																
1.2, 1.2 TSI, 1.4 TSI, 1.6, 1.4 TDI, 1.6 TDI	07.12 -			E40-79-009-01-11	A, 18, 20, 22, 45					22	25	nicht verstellbar *not adjustable*	nicht verstellbar *not adjustable*	AS41-85-008-01-VA	AS1540320HA	T
B12 Pro-Kit (Performance Komplettfahrwerke | *Performance Springs+Shocks*)																
1.2, 1.2 TSI	07.12 -	880	860	E90-79-009-01-22	A, 18, 20, 78, 161			30	30					F11-15-014-01-VA	F1540002	T
1.4 TSI, 1.6, 1.4 TDI, 1.6 TDI	07.12 -	960	860	E90-79-009-02-22	A, 18, 20, 78, 161			30	30					F11-81-010-05-VA	F1540002	T
Pro-Street-S (Gewindefahrwerke - höhenverstellbar | *Coil-Overs-Adjustable Ride Hight*)																
1.2, 1.2 TSI, 1.4 TSI, 1.6, 1.4 TDI, 1.6 TDI	07.12 -	940	860	PSS65-79-009-01-22	A, 24, 25, 45, 160			25-55	30-65							T
RAPID SPACEBACK																
Pro-Kit (Performance Fahrwerksfedern | *Performance Springs*)																
1.2, 1.2 TSI	10.13 -	880	860	E10-79-009-01-22	A, 18, 20			30	30					F11-15-014-01-VA	F1540002	T
1.4 TSI, 1.6, 1.4 TDI, 1.6 TDI	10.13 -	960	860	E10-79-009-02-22	A, 18, 20			30	30					F11-81-010-05-VA	F1540002	T
Anti-Roll-Kit (Performance Stabilisatoren | *Performance Sway Bars*)																
1.2, 1.2 TSI, 1.4 TSI, 1.6, 1.4 TDI, 1.6 TDI	10.13 -			E40-85-009-01-11	A, 18, 20, 22, 45					22	25	nicht verstellbar *not adjustable*	nicht verstellbar *not adjustable*	AS41-85-008-01-VA	AS1540320HA	T
B12 Pro-Kit (Performance Komplettfahrwerke | *Performance Springs+Shocks*)																
1.2, 1.2 TSI	10.13 -	880	860	E90-79-009-01-22	A, 18, 20, 78, 161			30	30					F11-15-014-01-VA	F1540002	T
1.4 TSI, 1.6, 1.4 TDI, 1.6 TDI	10.13 -	960	860	E90-79-009-02-22	A, 18, 20, 78, 161			30	30					F11-81-010-05-VA	F1540002	T
ROOMSTER (5J)																
Pro-Kit (Performance Fahrwerksfedern | *Performance Springs*)																
1.2, 1.2 TSI, 1.4, 1.6	03.06 -	960	900	E10-79-005-01-22	A, 18, 20			25	25					F11-79-005-01-VA	F11-79-005-01-HA	T
1.2 TDI, 1.4 TDI, 1.6 TDI, 1.9 TDI	03.06 -	960	900	E10-79-005-02-22	A, 18, 20			25	25					F11-85-008-02-VA	F11-79-005-01-HA	T
Anti-Roll-Kit (Performance Stabilisatoren | *Performance Sway Bars*)																
1.2, 1.2 TSI, 1.2 TDI, 1.4, 1.4 TDI, 1.6, 1.6 TDI, 1.9 TDI	03.07 -			E40-85-008-01-10	A, 18, 20, 22, 45					22		nicht verstellbar *not adjustable*		AS41-85-008-01-VA		T
ROOMSTER Praktik (5J)																
Anti-Roll-Kit (Performance Stabilisatoren | *Performance Sway Bars*)																
1.2, 1.2 TDI, 1.2 TSI, 1.4, 1.4 TDI, 1.6 TDI	03.07 -			E40-85-008-01-10	A, 18, 20, 22, 45					22		nicht verstellbar *not adjustable*		AS41-85-008-01-VA		T
SUPERB (3U4)																
Pro-Kit (Performance Fahrwerksfedern | *Performance Springs*)																
1.8 T, 2.0, 1.9 TDI, 2.0 TDI	12.01 - 03.08	1160	1090	E10-79-003-01-22	A, 18, 20			30	30					F1541001	F1558002	T
2.5 TDI, 2.8 V6	12.01 - 03.08	1230	1090	E10-79-003-02-22	A, 18, 20			30	30					F1558001	F1558002	T
B12 Pro-Kit (Performance Komplettfahrwerke | *Performance Springs+Shocks*)																
1.8 T, 2.0, 1.9 TDI, 2.0 TDI	12.01 - 03.08	1160	1090	E90-79-003-01-22	A, 18, 20, 78, 161			30	30					F1541001	F1558002	T
2.5 TDI, 2.8 V6	12.01 - 03.08	1230	1090	E90-79-003-02-22	A, 18, 20, 78, 161			30	30					F1558001	F1558002	T
SUPERB (3T4)																
Pro-Kit (Performance Fahrwerksfedern | *Performance Springs*)																
1.4 TSI, 1.6 TDI, 1.8 TSI, 1.9 TDI, 2.0 TDI, 2.0 TDI 16V, 2.0 TSI	03.08 -	1210	1250	E10-79-007-01-22	A, 18			30	30					F11-15-007-03-VA	F11-15-007-15-HA	ABE
1.8 TSI 4x4, 2.0 TDI 16V 4x4, 2.0 TDI 4x4	09.08 -	1210	1250	E10-79-007-01-22	A, 18			30	30					F11-15-007-03-VA	F11-15-007-15-HA	T
Anti-Roll-Kit (Performance Stabilisatoren | *Performance Sway Bars*)																
1.4 TSI, 1.6 TDI, 1.8 TSI, 1.8 TSI 4x4, 1.9 TDI, 2.0 TDI, 2.0 TDI 16V, 2.0 TDI 16V 4x4, 2.0 TDI 4x4, 2.0 TSI, 3.6 V6 4x4	03.08 -			E40-79-007-01-11	A, 18, 22, 45					26	22 Rohr 22 *tube*	2-fach verstellbar *2-way adjustable*	2-fach verstellbar *2-way adjustable*	AS41-85-014-01-VA	AS41-85-014-02-HA	T
B12 Pro-Kit (Performance Komplettfahrwerke | *Performance Springs+Shocks*)																
1.4 TSI, 1.6 TDI, 1.8 TSI, 1.9 TDI, 2.0 TDI, 2.0 TDI 16V, 2.0 TSI	03.08 -	1210	1250	E90-79-007-01-22	A, 18, 20, 34, 78, 161			30	30					F11-15-007-03-VA	F11-15-007-15-HA	ABE
Pro-Street-S (Gewindefahrwerke - höhenverstellbar | *Coil-Overs-Adjustable Ride Hight*)																
1.4 TSI, 1.6 TDI, 1.8 TSI, 1.9 TDI, 2.0 TDI, 2.0 TDI 16V, 2.0 TSI	05.10 -	1200	1250	PSS65-15-007-02-22	A,24,34,45, 160			35-65	35-65							T
1.8 TSI 4x4, 3.6 V6 4x4, 2.0 TDI 16V 4x4, 2.0 TDI 4x4	03.09 -	1200	1250	PSS65-85-016-04-22	A,18,24,45, 160			35-70	35-70							T
SUPERB (3V3)																
Pro-Kit (Performance Fahrwerksfedern | *Performance Springs*)																
1.4 TSI, 1.4 TSI 4x4	03.15 -	985	1220	E10-85-042-01-22	A, 18	32		30-35	25					F11-15-021-01-VA	F11-15-007-04-HA	T
1.4 TSI 4x4, 1.8 TSI, 2.0 TSI, 1.6 TDI, 2.0 TDI	03.15 -	1070	1220	E10-85-041-04-22	A, 18	32		30-35	25					F11-15-021-02-VA	F11-15-007-04-HA	T
2.0 TSI, 2.0 TDI	03.15 -	1100	1220	E10-85-042-02-22	A, 18, 20	32		30-35	25					F11-85-041-01-VA	F11-15-007-04-HA	T
2.0 TSI 4x4, 2.0 TDI 4x4	03.15 -	1160	1220	E10-85-042-03-22	A, 18	32		30-35	30					F11-85-042-03-FA	F11-15-007-04-HA	T
SUPERB Kombi (3T5) ***SUPERB Estate (3T5)***																
Pro-Kit (Performance Fahrwerksfedern | *Performance Springs*)																
1.4 TSI, 1.6 TDI, 1.8 TSI, 1.9 TDI, 2.0 TDI, 2.0 TDI 16V, 2.0 TSI	10.09 -	1210	1250	E10-79-007-01-22	A, 18			30	30					F11-15-007-03-VA	F11-15-007-15-HA	T
1.8 TSI 4x4, 2.0 TDI 16V 4x4, 2.0 TDI 4x4	10.09 -	1210	1250	E10-79-007-01-22	A, 18			30	30					F11-15-007-03-VA	F11-15-007-15-HA	T
Anti-Roll-Kit (Performance Stabilisatoren | *Performance Sway Bars*)																
1.4 TSI, 1.6 TDI, 1.8 TSI, 1.8 TSI 4x4, 1.9 TDI, 2.0 TDI, 2.0 TDI 16V, 2.0 TDI 16V 4x4, 2.0 TDI 4x4, 2.0 TSI, 3.6 V6 4x4	10.09 -			E40-79-007-01-11	A, 18, 22, 45					26	22 Rohr 22 *tube*	2-fach verstellbar *2-way adjustable*	2-fach verstellbar *2-way adjustable*	AS41-85-014-01-VA	AS41-85-014-02-HA	T
B12 Pro-Kit (Performance Komplettfahrwerke | *Performance Springs+Shocks*)																
1.4 TSI, 1.6 TDI, 1.8 TSI, 1.9 TDI, 2.0 TDI, 2.0 TDI 16V, 2.0 TSI	10.09 -	1210	1250	E90-79-007-01-22	A, 18, 20, 34, 78, 161			30	30					F11-15-007-03-VA	F11-15-007-15-HA	T
Pro-Street-S (Gewindefahrwerke - höhenverstellbar | *Coil-Overs-Adjustable Ride Hight*)																
1.4 TSI, 1.6 TDI, 1.8 TSI, 1.9 TDI, 2.0 TDI, 2.0 TDI 16V, 2.0 TSI	05.10 -	1200	1250	PSS65-15-007-02-22	A,24,34,45, 160			35-65	35-65							T
1.8 TSI 4x4, 3.6 V6 4x4, 2.0 TDI 16V 4x4, 2.0 TDI 4x4	10.09 -	1200	1250	PSS65-85-016-04-22	A,18,24,45, 160			35-70	35-70							T

SKODA

SMART

SUBARU

Modell	Baujahr	Achslast Vorne kg	Achslast Hinten kg	Artikel-Nr.	Hinweise	ab Nachtrag ...xx BE	bis Nachtrag ...xx BE	ca. Tieferl. Vorne mm	ca. Tieferl. Hinten mm	Ø Vorne mm	Ø Hinten mm	Verstellbarkeit Vorne	Verstellbarkeit Hinten	Ersatzteilbez. Vorne	Ersatzteilbez. Hinten	Gutachten
Model	*Year*	*Front Axle Load kg*	*Rear Axle Load kg*	*Part-No.*	*Notes*	*from suppl. ...xx of type approval*	*to suppl. ...xx of type approval*	*ca. Lowering Front mm*	*ca. Lowering Rear mm*	*Ø Front mm*	*Ø Rear mm*	*Adjustable Front*	*Adjustable Rear*	*Spare Part Marking Front*	*Spare Part Marking Rear*	*Homologation*
SUPERB Kombi (3V5)																
SUPERB Estate (3V5)																
Pro-Kit (Performance Fahrwerksfedern | *Performance Springs*)																
1.4 TSI, 1.4 TSI 4x4	03.15 -	985	1247	E10-79-012-01-22	A, 18	32		35	30					F11-15-021-01-VA	F11-79-008-01-HA	T
1.4 TSI 4x4, 1.8 TSI, 2.0 TSI, 1.6 TDI, 2.0 TDI	03.15 -	1070	1247	E10-79-012-02-22	A, 18	32		35	30					F11-15-021-02-VA	F11-79-008-01-HA	T
2.0 TSI, 2.0 TDI	03.15 -	1100	1247	E10-79-012-03-22	A, 18, 20	32		35	30					F11-85-041-01-VA	F11-79-008-01-HA	T
2.0 TSI 4x4, 2.0 TDI 4x4	03.15 -	1160	1247	E10-79-012-04-22	A, 18	32		35	30					F11-85-042-03-FA	F11-79-008-01-HA	T
YETI (5L)																
Pro-Kit (Performance Fahrwerksfedern | *Performance Springs*)																
1.4 TSI 4x4, 1.8 TSI 4x4, 2.0 TDI 4x4	05.09 -	1200	1250	E10-79-008-01-22	A, 18			30-35	30-35					F11-85-012-03-VA	F11-79-008-01-HA	T
1.2 TSI, 1.4 TSI, 1.6, 1.6 TDI, 1.8 TSI 4x4, 2.0 TDI, 2.0 TDI 4x4	05.09 -	1100	1160	E10-79-008-02-22	A, 18			35	30					F11-15-007-03-VA	F11-85-012-01-HA	T
CABRIO (450)																
CONVERTIBLE (450)																
Pro-Kit (Performance Fahrwerksfedern | *Performance Springs*)																
0.6	03.00 - 01.04	427	610	E10-56-001-01-02	A, 18, 20				25						F11-56-001-01-HA	T
0.6, 0.7, 0.8 CDI	03.00 - 01.04	430	610	E10-56-001-02-22	A, 18, 20			25	25					F11-56-001-02-VA	F11-56-001-01-HA	T
B12 Pro-Kit (Performance Komplettfahrwerke | *Performance Springs+Shocks*)																
0.6, 0.7, 0.8 CDI	03.01 - 01.04	430	610	E90-56-001-02-22	A, 18, 20, 78, 161			25	25					F11-56-001-02-VA	F11-56-001-01-HA	T
CITY-COUPE (450)																
Pro-Kit (Performance Fahrwerksfedern | *Performance Springs*)																
0.6, 0.8 CDI	07.98 - 01.04	427	610	E10-56-001-01-02	A, 18, 20				25						F11-56-001-01-HA	T
0.6, 0.7, 0.8 CDI	03.98 - 01.04	430	610	E10-56-001-02-22	A, 18, 20			25	25					F11-56-001-02-VA	F11-56-001-01-HA	T
B12 Pro-Kit (Performance Komplettfahrwerke | *Performance Springs+Shocks*)																
0.6, 0.7, 0.8 CDI	03.01 - 01.04	430	610	E90-56-001-02-22	A, 18, 20, 78, 161			25	25					F11-56-001-02-VA	F11-56-001-01-HA	T
FORTWO Cabrio (450)																
FORTWO Convertible (450)																
Pro-Kit (Performance Fahrwerksfedern | *Performance Springs*)																
0.7, 0.8 CDI	01.04 - 01.07	430	610	E10-56-001-02-22	A, 18, 20			25	25					F11-56-001-02-VA	F11-56-001-01-HA	T
B12 Pro-Kit (Performance Komplettfahrwerke | *Performance Springs+Shocks*)																
0.7, 0.8 CDI	01.04 - 01.07	430	610	E90-56-001-02-22	A, 18, 20, 78, 161			25	25					F11-56-001-02-VA	F11-56-001-01-HA	T
FORTWO Cabrio (451)																
FORTWO Convertible (451)																
Pro-Kit (Performance Fahrwerksfedern | *Performance Springs*)																
0.8 CDi, 1.0, 1.0 Turbo	01.07 -	440	660	E10-56-002-01-22	A, 18, 20			20	20					F11-56-002-01-VA	F11-56-002-01-HA	T
B12 Pro-Kit (Performance Komplettfahrwerke | *Performance Springs+Shocks*)																
0.8 CDi, 1.0, 1.0 Turbo	01.07 -	440	660	E90-56-002-01-22	A, 18, 20, 78, 161			20	20					F11-56-002-01-VA	F11-56-002-01-HA	T
FORTWO Coupe (450)																
Pro-Kit (Performance Fahrwerksfedern | *Performance Springs*)																
0.7, 0.8 CDI	01.04 - 01.07	430	610	E10-56-001-02-22	A, 18, 20			25	25					F11-56-001-02-VA	F11-56-001-01-HA	T
B12 Pro-Kit (Performance Komplettfahrwerke | *Performance Springs+Shocks*)																
0.7, 0.8 CDI	01.04 - 01.07	430	610	E90-56-001-02-22	A, 18, 20, 78, 161			25	25					F11-56-001-02-VA	F11-56-001-01-HA	T
FORTWO Coupe (451)																
Pro-Kit (Performance Fahrwerksfedern | *Performance Springs*)																
0.8 CDi, 1.0, 1.0 Turbo	01.07 -	440	660	E10-56-002-01-22	A, 18, 20			20	20					F11-56-002-01-VA	F11-56-002-01-HA	T
B12 Pro-Kit (Performance Komplettfahrwerke | *Performance Springs+Shocks*)																
0.8 CDi, 1.0, 1.0 Turbo	01.07 -	440	660	E90-56-002-01-22	A, 18, 20, 78, 161			20	20					F11-56-002-01-VA	F11-56-002-01-HA	T
FORTWO Coupe (453)																
Pro-Kit (Performance Fahrwerksfedern | *Performance Springs*)																
0.9, 1.0	07.14 -	520	690	E10-56-003-01-22	A, 18, 20	22		20	20					F11-56-003-01-FA	F11-56-003-01-RA	T
B12 Pro-Kit (Performance Komplettfahrwerke | *Performance Springs+Shocks*)																
0.9, 1.0	07.14 -	520	690	E90-56-003-01-22	A, 18, 20, 78, 161	22		20	20					F11-56-003-01-FA	F11-56-003-01-RA	T
ROADSTER (452)																
Pro-Kit (Performance Fahrwerksfedern | *Performance Springs*)																
0.7	04.03 - 11.05	465	610	E10-56-001-05-22	A, 18, 20			25	25					F11-56-001-05-VA	F11-56-001-05-HA	T
B12 Pro-Kit (Performance Komplettfahrwerke | *Performance Springs+Shocks*)																
0.7	04.03 - 11.05	465	610	E90-56-001-05-22	A, 18, 20, 78, 161			25	25					F11-56-001-05-VA	F11-56-001-05-HA	T
ROADSTER Coupe (452)																
Pro-Kit (Performance Fahrwerksfedern | *Performance Springs*)																
0.7	04.03 - 11.05	465	610	E10-56-001-05-22	A, 18, 20			25	25					F11-56-001-05-VA	F11-56-001-05-HA	T
B12 Pro-Kit (Performance Komplettfahrwerke | *Performance Springs+Shocks*)																
0.7	04.03 - 11.05	465	610	E90-56-001-05-22	A, 18, 20, 78, 161			25	25					F11-56-001-05-VA	F11-56-001-05-HA	T
BRZ																
Pro-Kit (Performance Fahrwerksfedern | *Performance Springs*)																
2.0	06.12 -	876	943	E10-82-043-01-22	A, 18, 20			25	20					F11-82-043-01-VA	F11-82-043-01-HA	T
B12 Pro-Kit (Performance Komplettfahrwerke | *Performance Springs+Shocks*)																
2.0	06.12 -	876	943	E90-82-043-01-22	A, 18, 20, 78, 161			25	20					F11-82-043-01-VA	F11-82-043-01-HA	T
Pro-Street-S (Gewindefahrwerke - höhenverstellbar | *Coil-Overs-Adjustable Ride Hight*)																
2.0	06.12 -	876	943	PSS65-82-043-01-22	A, 23, 25, 45, 160			20-50	25-55							T
IMPREZA Coupe (GFC)																
Pro-Kit (Performance Fahrwerksfedern | *Performance Springs*)																
1.6, 1.6 4WD, 2.0, 2.0 4WD, 2.0 AWD, 2.0 Turbo 4WD, 2.0 i	11.95 - 12.00	900	900	E7705-140	A, 18			30	30					F7705001	F7705002	T

SUBARU

Modell *Model*	Baujahr *Year*	Achslast Vorne kg *Front Axle Load kg*	Achslast Hinten kg *Rear Axle Load kg*	Artikel-Nr. *Part-No.*	Hinweise *Notes*	ab Nachtrag ...xx BE *from suppl. ...xx of type approval*	bis Nachtrag ...xx BE *to suppl. ...xx of type approval*	ca. Tieferl. Vorne mm *ca. Lowering Front mm*	ca. Tieferl. Hinten mm *ca. Lowering Rear mm*	Ø Vorne mm *Ø Front mm*	Ø Hinten mm *Ø Rear mm*	Verstellbarkeit Vorne *Adjustable Front*	Verstellbarkeit Hinten *Adjustable Rear*	Ersatzteilbez. Vorne *Spare Part Marking Front*	Ersatzteilbez. Hinten *Spare Part Marking Rear*	Gutachten *Homologation*
IMPREZA Coupe (GFC)																
Anti-Roll-Kit (Performance Stabilisatoren | *Performance Sway Bars*)																
1.6, 1.6 4WD, 2.0, 2.0 4WD, 2.0 AWD, 2.0 Turbo 4WD, 2.0 i	11.95 - 12.00			E40-77-001-01-11	A, 45					23	24	nicht verstellbar *not adjustable*	nicht verstellbar *not adjustable*	AS41-77-001-01-VA	AS41-77-001-01-HA	T
Pro-Street-S (Gewindefahrwerke - höhenverstellbar | *Coil-Overs-Adjustable Ride Hight*)																
1.6, 1.6 4WD, 2.0, 2.0 4WD, 2.0 AWD, 2.0 Turbo 4WD, 2.0 i	11.95 - 12.00	900	900	PSS65-77-001-01-22	A, 24, 25, 45, 160			25-50	25-50							T
IMPREZA Schrägheck ***IMPREZA Hatchback***																
Pro-Kit (Performance Fahrwerksfedern | *Performance Springs*)																
2.0 WRX STi Allrad, 2.0 i Allrad, 2.0 i WRX Allrad *2.0 WRX STi All-wheel Drive, 2.0 i All-wheel Drive, 2.0 i WRX All-wheel Drive*	12.02 - 12.07	1030	960	E10-77-002-04-22	A, 18			30-35	25-30					F11-77-002-03-VA	F11-77-002-04-HA	T
2.0 WRX STi Allrad, 2.0 i Allrad, 2.0 i WRX Allrad *2.0 WRX STi All-wheel Drive, 2.0 i All-wheel Drive, 2.0 i WRX All-wheel Drive*	01.03 - 12.07	1030	960	E10-77-002-06-22	A, 18			30-35	25-30					F11-77-002-03-VA	F11-77-002-06-HA	T
IMPREZA Schrägheck (GR, GH, G3) ***IMPREZA Hatchback (GR, GH, G3)***																
Pro-Kit (Performance Fahrwerksfedern | *Performance Springs*)																
1.5 AWD, 1.5 F, 2.0 R AWD	01.08 -	1040	1040	E10-77-006-01-22	A, 18			30	25					F11-77-006-01-VA	F11-77-006-01-HA	T
2.5 WRX STI AWD, 2.5 WRX STI 330S AWD, 2.5 STI CS400	04.10 -	1070	1040	E10-77-009-01-22	A, 18			20	5					F11-77-009-01-VA	F11-77-009-01-HA	T
IMPREZA Schrägheck (GP) ***IMPREZA Hatchback (GP)***																
Pro-Kit (Performance Fahrwerksfedern | *Performance Springs*)																
1.6 i AWD	06.12 -	1040	1000	E10-77-011-01-22	A, 18			25	10					F11-77-011-01-VA	F11-77-011-01-HA	T
Anti-Roll-Kit (Performance Stabilisatoren | *Performance Sway Bars*)																
1.6 i AWD	06.12 -			E40-77-011-01-11	A, 45					26	22	nicht verstellbar *not adjustable*	2-fach verstellbar *2-way adjustable*	AS41-77-011-01-VA	AS41-77-011-01-HA	T
IMPREZA Station Wagon (GF) ***IMPREZA Estate (GF)***																
Pro-Kit (Performance Fahrwerksfedern | *Performance Springs*)																
1.6, 1.6 i, 1.6 i 4WD, 1.8 i, 1.8 i 4WD, 2.0, 2.0 Turbo GT 4WD, 2.0 i, 2.0 i 16V AWD, 2.0 i 4WD, 2.0 i Turbo 4WD	08.92 - 12.00	900	900	E7705-140	A, 18			30	30					F7705001	F7705002	T
Anti-Roll-Kit (Performance Stabilisatoren | *Performance Sway Bars*)																
1.6, 1.6 i, 1.6 i 4WD, 1.8 i, 1.8 i 4WD, 2.0, 2.0 Turbo GT 4WD, 2.0 i, 2.0 i 16V AWD, 2.0 i 4WD, 2.0 i Turbo 4WD	08.92 - 12.00			E40-77-001-01-11	A, 45					23	24	nicht verstellbar *not adjustable*	nicht verstellbar *not adjustable*	AS41-77-001-01-VA	AS41-77-001-01-HA	T
Pro-Street-S (Gewindefahrwerke - höhenverstellbar | *Coil-Overs-Adjustable Ride Hight*)																
1.6, 1.6 i, 1.6 i 4WD, 1.8 i, 1.8 i 4WD, 2.0, 2.0 Turbo GT 4WD, 2.0 i, 2.0 i 16V AWD, 2.0 i 4WD, 2.0 i Turbo 4WD	08.92 - 12.00	900	900	PSS65-77-001-01-22	A, 24, 25, 45, 160			25-50	25-50							T
IMPREZA Station Wagon (GD, GG) ***IMPREZA Estate (GD, GG)***																
Pro-Kit (Performance Fahrwerksfedern | *Performance Springs*)																
1.6, 2.0, 2.0 Turbo, 2.0 WRX Turbo	10.00 - 12.02	1030	960	E10-77-002-04-22	A, 18, 183			30-35	25-30					F11-77-002-03-VA	F11-77-002-04-HA	T
1.6 AWD, 2.0 AWD, 2.0 Turbo AWD, 2.0 WRX Turbo AWD, 2.0 WRX STI AWD	01.03 - 12.04	1030	960	E10-77-002-06-22	A, 18			30-35	25-30					F11-77-002-03-VA	F11-77-002-06-HA	T
Anti-Roll-Kit (Performance Stabilisatoren | *Performance Sway Bars*)																
2.0 WRX	10.00 - 12.02			E40-77-001-02-11	A, 45					23	24	nicht verstellbar *not adjustable*	nicht verstellbar *not adjustable*	AS41-77-001-01-VA	AS41-77-001-01-HA	T
2.0 WRX STI, 2.4 WRX STI, ohne MY2004 *2.0 WRX STI, 2.4 WRX STI, without MY2004*	01.03 - 01.05			E40-77-001-03-11	A, 45					23	24	nicht verstellbar *not adjustable*	nicht verstellbar *not adjustable*	AS41-77-001-01-VA	AS41-77-001-01-HA	T
Pro-Street-S (Gewindefahrwerke - höhenverstellbar | *Coil-Overs-Adjustable Ride Hight*)																
1.6, 2.0, 2.0 Turbo, 2.0 WRX Turbo	10.00 - 12.02	970	960	PSS65-77-001-02-22	A, 24, 25, 45, 160			20-50	20-50							T
1.6, 2.0, 2.0 Turbo, 2.0 WRX Turbo, 2.0 i R, 2.5 WRX	01.03 - 12.07	990	960	PSS65-77-001-03-22	A, 24, 25, 45, 160			25-55	25-55							T
2.0 WRX STI	09.05 -	1030	960	PSS65-77-001-04-22	A, 24, 25, 45, 160			25-55	25-55							T
IMPREZA Stufenheck (GC) ***IMPREZA Saloon (GC)***																
Pro-Kit (Performance Fahrwerksfedern | *Performance Springs*)																
1.6 i, 1.6 i AWD, 1.8 i, 1.8 i AWD, 2.0 AWD, 2.0 Turbo GT AWD, 2.0 i, 2.0 i AWD	08.92 - 12.00	900	900	E7705-140	A, 18, 183			30	30					F7705001	F7705002	T
Anti-Roll-Kit (Performance Stabilisatoren | *Performance Sway Bars*)																
1.6 i, 1.6 i AWD, 1.8 i, 1.8 i AWD, 2.0 AWD, 2.0 Turbo GT AWD, 2.0 i, 2.0 i AWD	08.92 - 12.00			E40-77-001-01-11	A, 45					23	24	nicht verstellbar *not adjustable*	nicht verstellbar *not adjustable*	AS41-77-001-01-VA	AS41-77-001-01-HA	T
Pro-Street-S (Gewindefahrwerke - höhenverstellbar | *Coil-Overs-Adjustable Ride Hight*)																
1.6 i, 1.6 i AWD, 1.8 i, 1.8 i AWD, 2.0 AWD, 2.0 Turbo GT AWD, 2.0 i, 2.0 i AWD	08.92 - 12.00	900	900	PSS65-77-001-01-22	A, 24, 25, 45, 160			25-50	25-50							T
IMPREZA Stufenheck (GD, GG) ***IMPREZA Saloon (GD, GG)***																
Pro-Kit (Performance Fahrwerksfedern | *Performance Springs*)																
1.6 AWD, 2.0 WRX Turbo, 2.0 i, 2.0 i Allrad *1.6 AWD, 2.0 WRX Turbo, 2.0 i, 2.0 i All-wheel Drive*	12.00 - 12.02	1030	960	E10-77-002-04-22	A, 18, 183			30-35	25-30					F11-77-002-03-VA	F11-77-002-04-HA	T
1.6, 2.0, 2.0 WRX STI, 2.5 WRX STI	01.03 -12.04 -	1030	960	E10-77-002-06-22	A, 18			30-35	25-30					F11-77-002-03-VA	F11-77-002-06-HA	T
Anti-Roll-Kit (Performance Stabilisatoren | *Performance Sway Bars*)																
2.0 WRX Turbo	12.00 - 12.02			E40-77-001-02-11	A, 45					23	24	nicht verstellbar *not adjustable*	nicht verstellbar *not adjustable*	AS41-77-001-01-VA	AS41-77-001-01-HA	T
2.0 WRX STi, 2.0 WRX Turbo	01.03 - 01.05			E40-77-001-03-11	A, 45					23	24	nicht verstellbar *not adjustable*	nicht verstellbar *not adjustable*	AS41-77-001-01-VA	AS41-77-001-01-HA	T
Pro-Street-S (Gewindefahrwerke - höhenverstellbar | *Coil-Overs-Adjustable Ride Hight*)																
1.6, 1.8, 2.0, 2.0 WRX Turbo	12.00 - 12.02	970	960	PSS65-77-001-02-22	A, 24, 25, 45, 160			20-50	20-50							T
1.6, 1.8, 2.0, 2.0 WRX Turbo, 2.5 WRX Turbo	01.03 - 12.07	990	960	PSS65-77-001-03-22	A, 24, 25, 45, 160			25-55	25-55							T
2.0 WRX STI, 2.5 WRX STi	09.05 -	1030	960	PSS65-77-001-04-22	A, 24, 25, 45, 160			25-55	25-55							T

SUBARU

SUZUKI

TOYOTA

Modell *Model*	Baujahr *Year*	Achslast Vorne kg *Front Axle Load kg*	Achslast Hinten kg *Rear Axle Load kg*	Artikel-Nr. *Part-No.*	Hinweise *Notes*	ab Nachtrag ...xx BE *from suppl. ...xx of type approval*	bis Nachtrag ...xx BE *to suppl. ...xx of type approval*	ca. Tieferl. Vorne mm *ca. Lowering Front mm*	ca. Tieferl. Hinten mm *ca. Lowering Rear mm*	Ø Vorne mm *Ø Front mm*	Ø Hinten mm *Ø Rear mm*	Verstellbarkeit Vorne *Adjustable Front*	Verstellbarkeit Hinten *Adjustable Rear*	Ersatzteilbez. Vorne *Spare Part Marking Front*	Ersatzteilbez. Hinten *Spare Part Marking Rear*	Gutachten *Homologation*
IMPREZA Stufenheck (GR) ***IMPREZA Saloon (GR)***																
Pro-Kit (Performance Fahrwerksfedern | *Performance Springs*)																
1.5 R, 2.0 i AWD	01.08 -	1040	1040	E10-77-006-01-22	A, 18			30	25					F11-77-006-01-VA	F11-77-006-01-HA	T
2.5 WRX STI AWD	01.11 -	1070	1040	E10-77-009-01-22	A, 18			20	5					F11-77-009-01-VA	F11-77-009-01-HA	T
TREZIA																
Pro-Kit (Performance Fahrwerksfedern | *Performance Springs*)																
1.3	03.11 -	900	825	E10-82-038-01-22	A, 18, 20			20	20					F11-82-019-02-VA	F11-82-019-01-HA	T
1.4 D	03.11 -	900	825	E10-82-038-02-22	A, 18, 20			20	20					F11-82-033-01-VA	F11-82-019-01-HA	T
XV																
Pro-Kit (Performance Fahrwerksfedern | *Performance Springs*)																
1.6 i, 2.0 i	03.12 -	1075	1060	E10-77-010-01-22	A, 18			25	20					F11-77-010-01-VA	F11-77-010-01-HA	T
2.0 D	03.12 -	1075	1060	E10-77-010-02-22	A, 18			25	20					F11-77-010-02-VA	F11-77-010-01-HA	T
Anti-Roll-Kit (Performance Stabilisatoren | *Performance Sway Bars*)																
1.6 i, 2.0 D, 2.0 i	03.12 -			E40-77-011-01-11	A, 45					26	22	nicht verstellbar *not adjustable*	2-fach verstellbar *2-way adjustable*	AS41-77-011-01-VA	AS41-77-011-01-HA	T
GRAND VITARA II (JT)																
Pro-Kit (Performance Fahrwerksfedern | *Performance Springs*)																
1.6 Allrad, 2.0 Allrad *1.6 All-wheel Drive, 2.0 All-wheel Drive*	04.05 -	1050	1210	E10-80-008-01-22	A, 18			30	30					F11-80-008-01-VA	F11-80-008-01-HA	T
KIZASHI (FR)																
Pro-Kit (Performance Fahrwerksfedern | *Performance Springs*)																
2.4	10.10 -	1200	1100	E10-80-011-01-22	A, 18, 20			20	20					F11-80-011-01-VA	F11-80-011-01-HA	T
2.4	10.10 -	1200	1100	E10-80-011-02-22	A, 18			20	20					F11-80-011-01-VA	F11-80-011-02-HA	T
SWIFT III (MZ, EZ)																
Pro-Kit (Performance Fahrwerksfedern | *Performance Springs*)																
1.3, 1.3 DDiS, 1.5, 1.6	02.05 -	830	800	E10-80-007-01-22	A, 18, 20			25	25					F11-80-007-01-VA	F11-80-007-01-HA	T
SWIFT IV (FZ, NZ)																
Pro-Kit (Performance Fahrwerksfedern | *Performance Springs*)																
1.2, 1.6	10.10 -	850	830	E10-80-010-01-22	A, 18, 20			30	20					F11-80-010-01-VA	F11-80-010-01-HA	T
1.3 DDiS	10.10 -	850	830	E10-80-010-02-22	A, 18, 20			25	20					F11-80-010-02-VA	F11-80-010-01-HA	T
SX4 (GY)																
Pro-Kit (Performance Fahrwerksfedern | *Performance Springs*)																
1.5, 1.5 VVT, 1.6, 1.6 DDIS, 1.6 VVT, 1.9 DDiS	06.06 -	870	880	E10-80-009-01-22	A, 18, 20			25	25					F11-80-009-01-VA	F11-80-009-01-HA	T
SX4 Stufenheck (GY) ***SX4 Saloon (GY)***																
Pro-Kit (Performance Fahrwerksfedern | *Performance Springs*)																
1.6	10.07 -	870	880	E10-80-009-01-22	A, 18, 20			25	25					F11-80-009-01-VA	F11-80-009-01-HA	T
Alphard / Vellfire (GGH2_, ANH2_, ATH2_)																
Pro-Kit (Performance Fahrwerksfedern | *Performance Springs*)																
2.4, 2.4 Hybrid, 2.4 4WD, 3.5, 3.5 4WD	04.08 -			E10-82-055-01-22	A, 18, 210			30	30					F11-82-055-01-FA	F11-82-055-01-RA	E
AURIS (NRE15_, ZZE15_, ADE15_, ZRE15_, NDE15_)																
Pro-Kit (Performance Fahrwerksfedern | *Performance Springs*)																
1.8 Hybrid	09.10 -	1020	980	E10-82-024-08-22	A, 18, 20			30	25					F11-82-024-05-VA	F11-82-024-08-HA	T
1.4 D-4D, 1.4 VVTi, 1.6, 1.6 VVTi, 1.8, 1.8 VVTi	10.06 -	1020	1010	E10-82-024-05-22	A, 18, 20			30	30					F11-82-024-05-VA	F11-82-024-05-HA	T
2.0 D-4D	03.07 -	1100	1010	E10-82-024-06-22	A, 18, 20			30	30					F11-82-024-06-VA	F11-82-024-05-HA	T
2.2 D	03.07 -	1100	1010	E10-82-024-07-22	A, 18, 20			20	20					F11-82-024-06-VA	F11-82-024-07-HA	T
AURIS (NZE18_, ZRE18_)																
Pro-Kit (Performance Fahrwerksfedern | *Performance Springs*)																
1.3, 1.4 D-4D	10.12 -	1020	1010	E10-82-047-01-22	A, 18, 20, 171			30	25					F11-82-047-01-VA	F11-82-024-05-HA	T
1.6	10.12 -	1020	1010	E10-82-047-02-22	A, 18, 20, 170			30	25					F11-82-047-01-VA	F11-82-024-07-HA	T
1.8 Hybrid	10.12 -	1080	1010	E10-82-047-04-22	A, 18, 20, 170			30	25					F11-82-024-05-VA	F11-82-021-01-HA	T
2.0 D-4D	10.12 -	1080	1010	E10-82-047-03-22	A, 18, 20, 170			30	25					F11-82-024-06-VA	F11-82-024-07-HA	T
AURIS TOURING SPORTS (ZWE18_, ZRE18_)																
Pro-Kit (Performance Fahrwerksfedern | *Performance Springs*)																
1.3, 1.4 D-4D	07.13 -	1020	1010	E10-82-047-05-22	A, 18, 20, 171			25	25					F11-82-047-01-VA	F11-82-024-08-HA	T
1.6	07.13 -	1020	1010	E10-82-047-06-22	A, 18, 20, 170			20	20					F11-82-047-01-VA	F11-82-021-01-HA	T
2.0 D-4D	07.13 -	1080	1010	E10-82-047-07-22	A, 18, 20, 170			20	20					F11-82-024-06-VA	F11-82-021-01-HA	T
1.8 Hybrid	07.13 -	1080	1010	E10-82-047-08-22	A, 18, 20, 170			20	20					F11-82-024-05-VA	F11-82-021-03-HA	T
AURIS VAN Kasten (NDE15_) ***AURIS VAN Box (NDE15_)***																
Pro-Kit (Performance Fahrwerksfedern | *Performance Springs*)																
1.4 D-4D	03.07 - 04.13	1020	1010	E10-82-024-05-22	A, 18, 20			30	30					F11-82-024-05-VA	F11-82-024-05-HA	T
AVENSIS (_T22_)																
Pro-Kit (Performance Fahrwerksfedern | *Performance Springs*)																
1.6, 1.6 VVT-i, 1.8, 1.8 VVT-i, 1.9 D, 2.0, 2.0 D, 2.0 D-4D, 2.0 TD, 2.0 VVT-i	09.97 - 02.03	1010	970	E8255-140	A, 18, 20			30	30					F8255001	F8255002	T

TOYOTA

Modell	Baujahr	Achslast Vorne kg	Achslast Hinten kg	Artikel-Nr.	Hinweise	ab Nachtrag ...xx BE	bis Nachtrag ...xx BE	ca. Tieferl. Vorne mm	ca. Tieferl. Hinten mm	Ø Vorne mm	Ø Hinten mm	Verstellbarkeit Vorne	Verstellbarkeit Hinten	Ersatzteilbez. Vorne	Ersatzteilbez. Hinten	Gutachten
Model	*Year*	*Front Axle Load kg*	*Rear Axle Load kg*	*Part-No.*	*Notes*	*from suppl. ...xx of type approval*	*to suppl. ...xx of type approval*	*ca. Lowering Front mm*	*ca. Lowering Rear mm*	*Ø Front mm*	*Ø Rear mm*	*Adjustable Front*	*Adjustable Rear*	*Spare Part Marking Front*	*Spare Part Marking Rear*	*Homologation*
AVENSIS (T25_)																
Pro-Kit (Performance Fahrwerksfedern | *Performance Springs*)																
1.6 VVT-i, 1.8	04.03 - 11.08	1020	1035	E10-82-016-01-22	A, 18, 20			25	25					F11-82-016-01-VA	F11-82-016-01-HA	T
2.0 D-4D, 2.2 D-4D, 2.2 D-CAT, 2.2 TD	04.03 - 11.08	1070	1035	E10-82-016-03-22	A, 18, 20			25	25					F11-82-016-03-VA	F11-82-016-01-HA	T
AVENSIS Kombi (T25)																
AVENSIS Estate (T25)																
Pro-Kit (Performance Fahrwerksfedern | *Performance Springs*)																
1.6 VVT-i, 1.8	04.03 - 11.08	1020	1035	E10-82-016-04-22	A, 18, 20			25	25					F11-82-016-01-VA	F11-82-016-04-HA	T
2.0 D-4D, 2.2 D-4D, 2.2 D-CAT, 2.2 TD	04.03 - 11.08	1070	1035	E10-82-016-06-22	A, 18, 20			25	25					F11-82-016-03-VA	F11-82-016-04-HA	T
AVENSIS Liftback (_T22_)																
Pro-Kit (Performance Fahrwerksfedern | *Performance Springs*)																
1.6, 1.6 VVT-i, 1.8, 1.8 VVT-i, 2.0, 2.0 D, 2.0 D-4D, 2.0 TD, 2.0 VVT-i	09.97 - 02.03	1010	970	E8255-140	A, 18, 20			30	30					F8255001	F8255002	T
AVENSIS Station Wagon (ZRT27, ADT27)																
AVENSIS Estate (ZRT27, ADT27)																
Pro-Kit (Performance Fahrwerksfedern | *Performance Springs*)																
1.6, 1.8, 2.0	02.09 -	1215	1135	E10-82-021-03-22	A, 18, 20			20-25	25					F11-82-021-01-VA	F11-82-021-03-HA	T
1.6 D-4D, 2.0 D-4D, 2.2 D-4D	02.09 -	1215	1135	E10-82-021-04-22	A, 18, 20			20-25	25					F11-82-021-02-VA	F11-82-021-03-HA	T
AVENSIS Stufenheck (T25)																
AVENSIS Saloon (T25)																
Pro-Kit (Performance Fahrwerksfedern | *Performance Springs*)																
1.6 VVT-i, 1.8	04.03 - 11.08	1020	1035	E10-82-016-01-22	A, 18, 20			25	25					F11-82-016-01-VA	F11-82-016-01-HA	T
2.0 D-4D, 2.2 D-4D, 2.2 D-CAT, 2.2 TD	04.03 - 11.08	1070	1035	E10-82-016-03-22	A, 18, 20			25	25					F11-82-016-03-VA	F11-82-016-01-HA	T
AVENSIS Stufenheck (ZRT27, ADT27)																
AVENSIS Saloon (ZRT27, ADT27)																
Pro-Kit (Performance Fahrwerksfedern | *Performance Springs*)																
1.6, 1.8, 2.0	02.09 -	1215	1135	E10-82-021-01-22	A, 18, 20			20-25	25					F11-82-021-01-VA	F11-82-021-01-HA	T
1.6 D-4D, 2.0 D-4D, 2.2 D-4D	02.09 -	1215	1135	E10-82-021-02-22	A, 18, 20			20-25	25					F11-82-021-02-VA	F11-82-021-01-HA	T
AVENSIS VERSO (_CLM2_, _ACM2_)																
Pro-Kit (Performance Fahrwerksfedern | *Performance Springs*)																
2.0 D-4D, 2.0 VVT-i	08.01 - 11.09	1230	1230	E10-82-005-01-22	A, 18, 20			30	30					F11-82-005-01-VA	F11-82-005-01-HA	T
AYGO (PAB4_, KGB4_)																
Pro-Kit (Performance Fahrwerksfedern | *Performance Springs*)																
1.0, 1.2	05.14 -	695	695	E10-82-020-03-22	A, 18, 20			20-25	30					F11-70-008-01-VA	F11-70-008-01-HA	T
AYGO (WNB1_, KGB1_)																
Pro-Kit (Performance Fahrwerksfedern | *Performance Springs*)																
1.0, 1.4 HDi	07.05 -	695	695	E10-82-020-03-22	A, 18, 20			30	30					F11-70-008-01-VA	F11-70-008-01-HA	T
B12 Pro-Kit (Performance Komplettfahrwerke | *Performance Springs+Shocks*)																
1.0, 1.4 HDi	07.05 -	695	695	E90-82-020-03-22	A, 18, 20, 78, 161			30	30					F11-70-008-01-VA	F11-70-008-01-HA	T
CAMRY (MCV3_, ACV3_, _XV3_)																
Pro-Kit (Performance Fahrwerksfedern | *Performance Springs*)																
2.4 VVT-i, 2.4 VVTi LE, 3.0 V6	11.01 - 11.06	1200	1200	E10-82-011-02-22	A, 18, 20			30	30					F11-82-011-02-VA	F11-82-011-02-HA	T
CAMRY Stufenheck (_XV4_)																
CAMRY Saloon (_XV 4_)																
Pro-Kit (Performance Fahrwerksfedern | *Performance Springs*)																
2.0 VVT-i, 2.4 VVTi, 2.4 VVTi Hybrid, 2.5 VVTi, 3.5	01.06 - 09.11			E10-82-027-04-22	A, 18, 20, 210			30	30					F11-82-027-04-VA	F11-82-027-04-HA	E
CAMRY Stufenheck (_XV5_)																
CAMRY Saloon (_XV 5_)																
Pro-Kit (Performance Fahrwerksfedern | *Performance Springs*)																
2.0, 2.4 Hybrid, 2.5 Hybrid, 2.5, 3.5	09.11 -			E10-82-046-01-22	A, 18, 20, 210			30	30					F11-82-046-01-VA	F11-82-046-01-HA	E
CELICA (ZZT23_)																
Pro-Kit (Performance Fahrwerksfedern | *Performance Springs*)																
1.8 16V TS, 1.8 16V VT-i	08.99 - 09.05	960	945	E8261-140	A, 18, 20			30	30					F8261001	F8261002	T
COROLLA (_E9_)																
Pro-Kit (Performance Fahrwerksfedern | *Performance Springs*)																
1.3, 1.3 i, 1.6, 1.6 XL, 1.6 i, 1.8 D	05.87 - 06.93	815	850	E8206-140	A, 18, 20			30	30					F8206001	F8206002	T
COROLLA (_E10_)																
Pro-Kit (Performance Fahrwerksfedern | *Performance Springs*)																
1.3 12V, 1.3 XLI, 1.3 XLI 16V, 1.6, 1.6 Si, 1.8 i, 2.0 D	05.92 - 04.97	925	925	E8230-140	A, 18, 20			30	30					F8230001	F8230002	T
COROLLA (_E11_)																
Pro-Kit (Performance Fahrwerksfedern | *Performance Springs*)																
1.4, 1.4 16V, 1.6, 1.6 16V, 1.6 Aut., 1.9 D, 2.0 D, 2.0 D-4D	04.97 - 12.01	920	920	E8250-140	A, 18, 20			30	30					F8250001	F8250002	T
COROLLA (ZZE12_, NDE12_, ZDE12_)																
Pro-Kit (Performance Fahrwerksfedern | *Performance Springs*)																
1.4 VVT-i, 1.6 VVT-i, 1.8 VVTL-i TS, 1.8 VVTi	01.02 - 02.07	1000	970	E10-82-012-02-22	A, 18, 20			30	30					F11-82-012-02-VA	F11-82-012-02-HA	T
1.4 D, 2.0 D-4D	01.02 - 02.07	1000	970	E10-82-012-03-22	A, 18, 20			30	30					F11-82-012-03-VA	F11-82-012-02-HA	T
B12 Pro-Kit (Performance Komplettfahrwerke | *Performance Springs+Shocks*)																
1.4 VVT-i, 1.6 VVT-i, 1.8 VVTL-i TS, 1.8 VVTi	01.02 - 02.07	1000	970	E90-82-012-02-22	A, 18, 20, 78, 153, 161			30	30					F11-82-012-02-VA	F11-82-012-02-HA	T
1.4 D, 2.0 D-4D	01.02 - 02.07	1000	970	E90-82-012-03-22	A, 18, 20, 78, 153, 161			30	30					F11-82-012-03-VA	F11-82-012-02-HA	T
COROLLA Compact (_E9_)																
Pro-Kit (Performance Fahrwerksfedern | *Performance Springs*)																
1.3, 1.6, 1.6 GTi, 1.6 XL, 1.6 i, 1.8 D	05.87 - 04.92	815	850	E8206-140	A, 18, 20			30	30					F8206001	F8206002	T
COROLLA Compact (_E10_)																
Pro-Kit (Performance Fahrwerksfedern | *Performance Springs*)																
1.3 12V, 1.3 XLI, 1.3 XLI 16V, 1.6 Si, 1.8 GT, 2.0 D	07.92 - 04.97	925	925	E8230-140	A, 18, 20			30	30					F8230001	F8230002	T

TOYOTA

Modell	Baujahr	Achslast Vorne kg	Achslast Hinten kg	Artikel-Nr.	Hinweise	ab Nachtrag ...xx BE	bis Nachtrag ...xx BE	ca. Tieferl. Vorne mm	ca. Tieferl. Hinten mm	Ø Vorne mm	Ø Hinten mm	Verstellbarkeit Vorne	Verstellbarkeit Hinten	Ersatzteilbez. Vorne	Ersatzteilbez. Hinten	Gutachten
Model	*Year*	*Front Axle Load kg*	*Rear Axle Load kg*	*Part-No.*	*Notes*	*from suppl. ...xx of type approval*	*to suppl. ...xx of type approval*	*ca. Lowering Front mm*	*ca. Lowering Rear mm*	*Ø Front mm*	*Ø Rear mm*	*Adjustable Front*	*Adjustable Rear*	*Spare Part Marking Front*	*Spare Part Marking Rear*	*Homologation*
COROLLA Compact (_E11_)																
Pro-Kit (Performance Fahrwerksfedern | *Performance Springs*)																
1.4, 1.6, 1.6 Aut., 1.9 D, 2.0 D, 2.0 D-4D	04.97 - 01.02	920	920	E8250-140	A, 18, 20			30	30					F8250001	F8250002	T
COROLLA Wagon (_E11_)																
Pro-Kit (Performance Fahrwerksfedern | *Performance Springs*)																
1.4, 1.6, 1.9 D, 2.0, 2.0 D-4D	04.97 - 01.02	920	920	E8250-140	A, 18, 20			30	30					F8250001	F8250002	T
COROLLA Kombi (_E12J_, _E12T_)																
COROLLA Estate (_E12J_, _E12T_)																
Pro-Kit (Performance Fahrwerksfedern | *Performance Springs*)																
1.4 VVT-i, 1.6 VVT-i, 1.8	01.02 - 02.07	1000	970	E10-82-012-02-22	A, 18, 20			30	30					F11-82-012-02-VA	F11-82-012-02-HA	T
1.4 D4-D, 2.0 D-4D	01.02 - 02.07	1000	970	E10-82-012-03-22	A, 18, 20			30	30					F11-82-012-03-VA	F11-82-012-02-HA	T
B12 Pro-Kit (Performance Komplettfahrwerke | *Performance Springs+Shocks*)																
1.4 VVT-i, 1.6 VVT-i, 1.8	01.02 - 02.07	1000	970	E90-82-012-02-22	A, 18, 20, 78, 153, 161			30	30					F11-82-012-02-VA	F11-82-012-02-HA	T
1.4 D4-D, 2.0 D-4D	01.02 - 02.07	1000	970	E90-82-012-03-22	A, 18, 20, 78, 153, 161			30	30					F11-82-012-03-VA	F11-82-012-02-HA	T
COROLLA Liftback (_E9_)																
Pro-Kit (Performance Fahrwerksfedern | *Performance Springs*)																
1.3, 1.3 i, 1.6, 1.6 GTI, 1.8 D	07.87 - 06.93	815	850	E8206-140	A, 18, 20			30	30					F8206001	F8206002	T
COROLLA Liftback (_E10_)																
Pro-Kit (Performance Fahrwerksfedern | *Performance Springs*)																
1.3 12V, 1.3 XLI, 1.6 GLI, 1.8 GT, 2.0 D	07.92 - 04.97	925	925	E8230-140	A, 18, 20			30	30					F8230001	F8230002	T
COROLLA Liftback (_E11_)																
Pro-Kit (Performance Fahrwerksfedern | *Performance Springs*)																
1.4, 1.6, 1.6 Aut., 1.9 D, 2.0 D, 2.0 D-4D	04.97 - 01.02	920	920	E8250-140	A, 18, 20			30	30					F8250001	F8250002	T
COROLLA Stufenheck (_E12J_, _E12T_)																
COROLLA Saloon (_E12J_, _E12T_)																
Pro-Kit (Performance Fahrwerksfedern | *Performance Springs*)																
1.4 VVT-i, 1.6 VVT-i, 1.8	11.01 - 07.07	1000	970	E10-82-012-02-22	A, 18, 20			30	30					F11-82-012-02-VA	F11-82-012-02-HA	T
1.4 D-4D, 2.0 D-4D	08.02 - 07.07	1000	970	E10-82-012-03-22	A, 18, 20			30	30					F11-82-012-03-VA	F11-82-012-02-HA	T
B12 Pro-Kit (Performance Komplettfahrwerke | *Performance Springs+Shocks*)																
1.4 VVT-i, 1.6 VVT-i, 1.8	11.01 - 07.07	1000	970	E90-82-012-02-22	A, 18, 20, 78, 153, 161			30	30					F11-82-012-02-VA	F11-82-012-02-HA	T
1.4 D-4D, 2.0 D-4D	08.02 - 07.07	1000	970	E90-82-012-03-22	A, 18, 20, 78, 153, 161			30	30					F11-82-012-03-VA	F11-82-012-02-HA	T
COROLLA Stufenheck (E15_)																
COROLLA Saloon (E15_)																
Pro-Kit (Performance Fahrwerksfedern | *Performance Springs*)																
1.4 D-4D, 1.4 VVT-i, 1.6, 1.6 CNG, 1.6 Dual VVTi, 1.6 VVT-i, 1.8, 1.8 VVTL-i, 1.8 VVTi	01.07 -	1020	1010	E10-82-024-05-22	A, 18, 20			30	30					F11-82-024-05-VA	F11-82-024-05-HA	T
2.0 D-4D	01.07 -	1100	1010	E10-82-024-06-22	A, 18, 20			30	30					F11-82-024-06-VA	F11-82-024-05-HA	T
COROLLA Verso (ZDE12_, CDE12_)																
Pro-Kit (Performance Fahrwerksfedern | *Performance Springs*)																
1.4 VVT-i, 1.6 VVT-i, 1.8, 1.8 VVT-i	09.01 - 05.04	1000	970	E10-82-012-02-22	A, 18, 20			30	30					F11-82-012-02-VA	F11-82-012-02-HA	T
1.4 D-4D, 2.0 D-4D	09.01 - 05.04	1000	970	E10-82-012-03-22	A, 18, 20			30	30					F11-82-012-03-VA	F11-82-012-02-HA	T
B12 Pro-Kit (Performance Komplettfahrwerke | *Performance Springs+Shocks*)																
1.4 VVT-i, 1.6 VVT-i, 1.8 VVT-i	01.02 - 12.03	1000	970	E90-82-012-02-22	A, 18, 20, 78, 153, 161			30	30					F11-82-012-02-VA	F11-82-012-02-HA	T
1.4 D-4D, 2.0 D-4D	01.02 - 12.03	1000	970	E90-82-012-03-22	A, 18, 20, 78, 153, 161			30	30					F11-82-012-03-VA	F11-82-012-02-HA	T
GT 86 Coupe (ZN6_)																
Pro-Kit (Performance Fahrwerksfedern | *Performance Springs*)																
2.0 GT	03.12 -	876	943	E10-82-043-01-22	A, 18, 20			25	20					F11-82-043-01-VA	F11-82-043-01-HA	T
B12 Pro-Kit (Performance Komplettfahrwerke | *Performance Springs+Shocks*)																
2.0 GT	03.12 -	876	943	E90-82-043-01-22	A, 18, 20, 78, 161			25	20					F11-82-043-01-VA	F11-82-043-01-HA	T
Pro-Street-S (Gewindefahrwerke - höhenverstellbar | *Coil-Overs-Adjustable Ride Hight*)																
2.0 GT	03.12 -	876	943	PSS65-82-043-01-22	A, 23, 25, 45, 160			20-50	25-55							T
IQ (KGJ1_, NGJ1_)																
Pro-Kit (Performance Fahrwerksfedern | *Performance Springs*)																
1.0	01.09 -	670	630	E10-82-034-01-22	A, 18, 20			25	30					F11-82-034-01-VA	F11-82-034-01-HA	T
MR 2 III (ZZW3_)																
Pro-Kit (Performance Fahrwerksfedern | *Performance Springs*)																
1.8 16V VT-i	10.99 - 06.07	540	735	E10-82-001-01-22	A, 18, 20			30	30					F11-82-001-01-VA	F11-82-001-01-HA	T
PRIUS PLUS (ZVW4_)																
Pro-Kit (Performance Fahrwerksfedern | *Performance Springs*)																
1.8 Hybrid	03.12 -	1110	1110	E10-82-045-01-22	A, 18, 20			25	20					F11-82-045-01-VA	F11-82-045-01-HA	T
RAV 4 III (ACA3_, ACE_, ALA3_, GSA3_, ZSA3_)																
Pro-Kit (Performance Fahrwerksfedern | *Performance Springs*)																
2.2 D-4D, 2.2 D-4D 4WD, 2.2 D-CAT 4WD	03.06 -	1300	1150	E10-82-025-02-22	A, 18			25-30	25-30					F11-82-025-02-VA	F11-82-025-01-HA	T
URBAN CRUISER (NSP1_, NLP1_, ZSP1_, NCP11_)																
Pro-Kit (Performance Fahrwerksfedern | *Performance Springs*)																
1.33	04.09 -	895	825	E10-82-033-01-22	A, 18, 20			20	25					F11-82-033-01-VA	F11-82-033-01-HA	T
VERSO S (NLP12_, NCP12_, NSP12_)																
Pro-Kit (Performance Fahrwerksfedern | *Performance Springs*)																
1.33, 1.5	11.10 -	900	825	E10-82-038-01-22	A, 18, 20			20	20					F11-82-019-02-VA	F11-82-019-01-HA	T
1.4 D4-D	11.10 -	900	825	E10-82-038-02-22	A, 18, 20			20	20					F11-82-033-01-VA	F11-82-019-01-HA	T

TOYOTA

VAUXHALL

VOLKSWAGEN

Modell	Baujahr	Achslast Vorne kg	Achslast Hinten kg	Artikel-Nr.	Hinweise	ab Nachtrag ...xx BE	bis Nachtrag ...xx BE	ca. Tieferl. Vorne mm	ca. Tieferl. Hinten mm	Ø Vorne mm	Ø Hinten mm	Verstellbarkeit Vorne	Verstellbarkeit Hinten	Ersatzteilbez. Vorne	Ersatzteilbez. Hinten	Gutachten
Model	*Year*	*Front Axle Load kg*	*Rear Axle Load kg*	*Part-No.*	*Notes*	*from suppl. ...xx of type approval*	*to suppl. ...xx of type approval*	*ca. Lowering Front mm*	*ca. Lowering Rear mm*	*Ø Front mm*	*Ø Rear mm*	*Adjustable Front*	*Adjustable Rear*	*Spare Part Marking Front*	*Spare Part Marking Rear*	*Homologation*
VIOS (SCP4_, NCP4_, AXP4_)																
Pro-Kit (Performance Fahrwerksfedern | *Performance Springs*)																
1.3 VVTi, 1.5, 1.5 VVTi	07.02 - 01.08	755	755	E8260-140	A, 18, 20			30	30					F8260001	F8260002	E
VIOS/YARIS Stufenheck (ZSP9_, NCP9_)																
VIOS/YARIS Saloon (ZSP9_, NCP9_)																
Pro-Kit (Performance Fahrwerksfedern | *Performance Springs*)																
1.0, 1.3	08.07 -	895	905	E10-82-019-01-22	A, 18, 20			25	25					F11-82-019-01-VA	F11-82-019-01-HA	T
YARIS (SCP1_, NLP1_, NCP1_)																
Pro-Kit (Performance Fahrwerksfedern | *Performance Springs*)																
1.0 16V, 1.3, 1.3 16V, 1.4 D-4D, 1.5 TS, 1.5 VVT-i TS	04.99 - 09.05	755	755	E8260-140	A, 18, 20			30	30					F8260001	F8260002	T
YARIS (SCP9_, NSP9_, KSP9_, NCP9_, ZSP9_)																
Pro-Kit (Performance Fahrwerksfedern | *Performance Springs*)																
1.0 VVT-i, 1.3 VVT-i, 1.33 VVT-i	11.05 -	895	905	E10-82-019-01-22	A, 18, 20			25	25					F11-82-019-01-VA	F11-82-019-01-HA	T
1.4 D-4D, 1.5 Hybrid	01.06 -	895	905	E10-82-019-02-22	A, 18, 20			25	25					F11-82-019-02-VA	F11-82-019-01-HA	T
B12 Pro-Kit (Performance Komplettfahrwerke | *Performance Springs+Shocks*)																
1.0 VVT-i, 1.3 VVT-i, 1.33 VVT-i	11.05 -	895	905	E90-82-019-01-22	A, 18, 20, 78, 161			25	25					F11-82-019-01-VA	F11-82-019-01-HA	T
1.4 D-4D	01.06 -	895	905	E90-82-019-02-22	A, 18, 20, 78, 161			25	25					F11-82-019-02-VA	F11-82-019-01-HA	T
YARIS (NLP13_, NSP13_, NCP13_, KSP13_)																
Pro-Kit (Performance Fahrwerksfedern | *Performance Springs*)																
1.0, 1.3, 1.3 VVT-i, 1.5	12.10 -	850	825	E10-82-040-01-22	A, 18, 20			25	25					F11-82-040-01-VA	F11-82-040-01-HA	T
1.4 D-4D, 1.5 Hybrid	09.11 -	895	825	E10-82-040-02-22	A, 18, 20			25	25					F11-82-040-02-VA	F11-82-040-01-HA	T
VIVA																
Pro-Kit (Performance Fahrwerksfedern | *Performance Springs*)																
1.0	01.15 -	740	710	E10-23-016-01-22	A, 18, 20			30	30					F11-23-016-01-FA	F11-23-016-01-RA	T
BEETLE (5C1)																
Pro-Kit (Performance Fahrwerksfedern | *Performance Springs*)																
1.2 TSI	10.11 -	980	820	E10-85-039-01-22	A, 18, 20, 171			30	30					F11-79-004-01-VA	F11-35-010-01-HA	T
1.4 TSI, 1.6 TDI	10.11 -	980	820	E10-85-039-01-22	A, 18, 20, 171			20	30					F11-79-004-01-VA	F11-35-010-01-HA	T
1.4 TSI, 2.0 TSI, 1.6 TDI, 2.0 TDI	10.11 -	1080	820	E10-85-039-02-22	A, 18, 20, 171			30	30					F11-15-007-01-VA	F11-35-010-01-HA	T
1.4 TSI, 1.6 TDI	10.11 -	980	880	E10-85-039-03-22	A, 18, 20, 170			20	30					F11-79-004-01-VA	F11-15-001-01-HA	T
1.4 TSI, 2.0 TSI, 1.6 TDI, 2.0 TDI	10.11 -	1080	880	E10-85-039-04-22	A, 18, 20, 170			30	30					F11-15-007-01-VA	F11-15-001-01-HA	T
B12 Pro-Kit (Performance Komplettfahrwerke | *Performance Springs+Shocks*)																
1.2 TSI	10.11 -	980	820	E90-85-039-01-22	A, 18, 20, 34, 78, 161, 171, 200			30	30					F11-79-004-01-VA	F11-35-010-01-HA	T
1.4 TSI, 1.6 TDI	10.11 -	980	820	E90-85-039-01-22	A, 18, 20, 34, 78, 161, 171, 200			20	30					F11-79-004-01-VA	F11-35-010-01-HA	T
1.4 TSI, 2.0 TSI, 1.6 TDI, 2.0 TDI	10.11 -	1080	820	E90-85-039-02-22	A, 18, 20, 34, 78, 161, 171, 200			30	30					F11-15-007-01-VA	F11-35-010-01-HA	T
1.4 TSI, 1.6 TDI	10.11 -	980	880	E90-85-039-03-22	A, 18, 20, 34, 78, 161, 170, 201			20	30					F11-79-004-01-VA	F11-15-001-01-HA	T
1.4 TSI, 2.0 TSI, 1.6 TDI, 2.0 TDI	10.11 -	1080	880	E90-85-039-04-22	A, 18, 20, 34, 78, 161, 170, 201			30	30					F11-15-007-01-VA	F11-15-001-01-HA	T
BEETLE Cabriolet (5C7)																
Pro-Kit (Performance Fahrwerksfedern | *Performance Springs*)																
1.4 TSI, 2.0 TSI	12.12 -	980	880	E10-85-039-07-22	A, 18, 20, 170			30	30					F11-79-004-01-VA	F11-85-022-01-HA	T
1.4 TSI, 2.0 TSI	12.12 -	1080	880	E10-85-039-08-22	A, 18, 20, 170			30	30					F11-15-007-01-VA	F11-85-022-01-HA	T
1.2 TSI	12.12 -	980	820	E10-85-039-05-22	A, 18, 20, 171			30						F11-79-004-01-VA		T
1.4 TSI, 1.6 TDI	12.12 -	980	820	E10-85-039-05-22	A, 18, 20, 171			20						F11-79-004-01-VA		T
1.6 TDI, 2.0 TDI	12.12 -	1080	820	E10-85-039-06-22	A, 18, 20, 171			30						F11-15-007-01-VA		T
B12 Pro-Kit (Performance Komplettfahrwerke | *Performance Springs+Shocks*)																
1.2 TSI	10.11 -	980	820	E90-85-039-05-22	A, 18, 20, 34, 78, 161, 171, 200			30						F11-79-004-01-VA		T
1.4 TSI, 1.6 TDI	10.11 -	980	820	E90-85-039-05-22	A, 18, 20, 34, 78, 161, 171, 200			20						F11-79-004-01-VA		T
1.6 TDI, 2.0 TDI	10.11 -	1080	820	E90-85-039-06-22	A, 18, 20, 34, 78, 161, 171, 200			30						F11-15-007-01-VA		T

VOLKSWAGEN

Modell	Baujahr	Achslast Vorne kg	Achslast Hinten kg	Artikel-Nr.	Hinweise	ab Nachtrag ...xx BE	bis Nachtrag ...xx BE	ca. Tieferl. Vorne mm	ca. Tieferl. Hinten mm	Ø Vorne mm	Ø Hinten mm	Verstellbarkeit Vorne	Verstellbarkeit Hinten	Ersatzteilbez. Vorne	Ersatzteilbez. Hinten	Gutachten
Model	*Year*	*Front Axle Load kg*	*Rear Axle Load kg*	*Part-No.*	*Notes*	*from suppl. ...xx of type approval*	*to suppl. ...xx of type approval*	*ca. Lowering Front mm*	*ca. Lowering Rear mm*	*Ø Front mm*	*Ø Rear mm*	*Adjustable Front*	*Adjustable Rear*	*Spare Part Marking Front*	*Spare Part Marking Rear*	*Homologation*
BEETLE Cabriolet (5C7)																
B12 Pro-Kit (Performance Komplettfahrwerke | *Performance Springs+Shocks*)																
1.4 TSI, 2.0 TSI	10.11 -	980	880	E90-85-039-07-22	A, 18, 20, 34, 78, 161, 170, 201			30	30					F11-79-004-01-VA	F11-85-022-01-HA	T
1.4 TSI, 2.0 TSI	10.11 -	1080	880	E90-85-039-08-22	A, 18, 20, 34, 78, 161, 170, 201			30	30					F11-15-007-01-VA	F11-85-022-01-HA	T
BORA (1J2)																
Pro-Kit (Performance Fahrwerksfedern | *Performance Springs*)																
1.4 16V, 1.6, 1.6 16V, 1.6 FSI	10.98 - 05.05	930	950	E8574-140	A, 18, 20, 26			30	30					F8560001	F7907002	T
1.8, 1.9 SDI, 1.9 TDI, 2.0	10.98 - 05.05	970	950	E8575-140	A, 18, 20, 26			30	30					F1540001	F7907002	T
1.8 T, 1.9 TDI, 2.3 V5	10.98 - 05.05	1000	950	E8576-140	A, 18, 20, 26			30	30					F1545001	F7907002	T
1.8 4motion, 1.9 TDI 4motion, 2.0 4motion	02.99 - 05.05	1030	1120	E10-85-001-05-22	A, 18			30	30					F1545001	F11-15-001-02-HA	T
1.9 TDI, 2.3 V5	10.98 - 05.05	1050	950	E10-85-001-16-22	A, 18, 20, 26			30	30					F8592001	F7907002	T
1.9 TDI 4motion, 2.3 V5 4motion, 2.8 V6 4motion	12.98 - 05.05	1050	1120	E8591-140	A, 18			30	30					F8592001	F11-15-001-02-HA	T
Sportline (Performance Fahrwerksfedern Sport | *Sport Performance Springs*)																
1.4 16V, 1.6, 1.6 16V, 1.6 FSI, 1.8, 1.8 T, 1.9 SDI, 1.9 TDI, 2.0	10.98 - 05.05	950	1000	E20-85-001-01-22	A, 18, 20, 26			45-50	30-35					F21-85-001-01-VA	F21-85-001-01-HA	T
1.8, 1.8 T, 1.9 TDI, 2.3 V5	10.98 - 05.05	1000	1000	E20-85-001-02-22	A, 18, 20, 26			45-50	30-35					F21-85-003-01-VA	F21-85-001-01-HA	T
Anti-Roll-Kit (Performance Stabilisatoren | *Performance Sway Bars*)																
1.4 16V, 1.6, 1.6 16V, 1.6 FSI, 1.8, 2.0	10.98 - 05.05			E1540-321	A, 18, 20, 22, 45					22		nicht verstellbar *not adjustable*		AS1540310VA		T
1.4 16V, 1.6, 1.6 16V, 1.6 FSI, 1.8, 2.0	10.98 - 05.05			E1540-320	A, 18, 20, 22, 45					22	25	nicht verstellbar *not adjustable*	nicht verstellbar *not adjustable*	AS1540310VA	AS1540320HA	T
1.8 T, 1.9 SDI, 1.9 TDI, 2.3 V5	10.98 - 05.05			E40-85-005-01-10	A, 18, 20, 22, 45					25		nicht verstellbar *not adjustable*		AS41-85-005-01-VA		T
1.8 T, 1.9 SDI, 1.9 TDI, 2.3 V5	10.98 - 05.05			E40-85-005-01-11	A, 18, 20, 22, 45					25	25	nicht verstellbar *not adjustable*	nicht verstellbar *not adjustable*	AS41-85-005-01-VA	AS1540320HA	T
B12 Pro-Kit (Performance Komplettfahrwerke | *Performance Springs+Shocks*)																
1.4 16V, 1.6, 1.6 16V, 1.6 FSI	10.98 - 05.05	930	960	E90-85-001-07-22	A, 18, 20, 26, 78, 161			30	30					F8560001	F7907002	T
1.8, 1.9 SDI, 1.9 TDI Schaltgetriebe, 2.0 *1.8, 1.9 SDI, 1.9 TDI manual transmission, 2.0*	10.98 - 05.05	970	960	E90-85-001-08-22	A, 18, 20, 26, 78, 161			30	30					F1540001	F7907002	T
1.8 T, 1.9 TDI, 1.9 TDI Schaltgetriebe, 2.3 V5 Schaltgetriebe *1.8 T, 1.9 TDI, 1.9 TDI manual transmission, 2.3 V5 manual transmission*	10.98 - 05.05	1000	960	E90-85-001-09-22	A, 18, 20, 26, 78, 161			30	30					F1545001	F7907002	T
1.8 4motion, 1.9 TDI 4motion, 2.0 4motion	02.99 - 05.05	1030	1120	E90-85-001-05-22	A, 18, 78, 161			30	30					F1545001	F11-15-001-02-HA	T
1.9 TDI, 1.9 TDI Schaltgetriebe, 2.3 V5, 2.3 V5 Schaltgetriebe *1.9 TDI, 1.9 TDI manual transmission, 2.3 V5, 2.3 V5 manual transmission*	10.98 - 05.05	1050	960	E90-85-001-10-22	A, 18, 20, 26, 78, 161			30	30					F8592001	F7907002	T
1.9 TDI 4motion, 2.3 V5 4motion, 2.8 V6 4motion	12.98 - 05.05	1050	1120	E90-85-001-06-22	A, 18, 78, 161			30	30					F8592001	F11-15-001-02-HA	T
B12 Sportline (Performance Komplettfahrwerke Sport | *Sport Performance Springs+Shocks*)																
1.4 16V, 1.6, 1.6 16V, 1.6 FSI, 1.8, 1.8 T, 1.9 SDI, 1.9 TDI, 2.0	10.98 - 05.05	950	1000	E95-85-001-01-22	A, 18, 20, 26, 78, 161			45-50	30-35					F21-85-001-01-VA	F21-85-001-01-HA	T
1.8, 1.8 T, 1.9 TDI, 2.0, 2.3 V5	10.98 - 05.05	1000	1000	E95-85-001-02-22	A, 18, 20, 26, 78, 161			45-50	30-35					F21-85-003-01-VA	F21-85-001-01-HA	T
Pro-Street-S (Gewindefahrwerke - höhenverstellbar | *Coil-Overs-Adjustable Ride Hight*)																
1.4 16V, 1.6, 1.6 16V, 1.6 FSI, 1.8, 1.8 T, 2.0, 2.3 V5, 1.9 SDI, 1.9 TDI	10.98 - 09.05	1020	1080	PSS65-85-001-03-22	A, 18, 20, 24, 25, 26, 45, 160			35-65	35-65							T
1.8 4Motion, 1.8T 4Motion, 2.0 4Motion, 1.9 TDI 4Motion	10.98 - 09.05	1050	1080	PSS65-85-001-02-22	A, 24, 25, 45, 160			35-65	35-65							T
1.4 16V, 1.6, 1.6 16V, 1.6 FSI, 1.8, 1.8 T, 1.9 SDI, 1.9 TDI, 2.0, 2.3 V5	10.98 - 05.05	1020	1080	PSS65-85-001-03-22	A, 18, 20, 24, 25, 26, 45, 160			35-65	35-65							T
BORA Kombi (1J6) ***BORA Estate (1J6)***																
Pro-Kit (Performance Fahrwerksfedern | *Performance Springs*)																
1.4 16V, 1.6, 1.6 16V, 1.6 FSI	05.99 - 05.05	930	1020	E8587-140	A, 18, 20, 26			30	30					F8560001	F7908002	T
1.9 TDI, 2.0	05.99 - 05.05	970	1020	E8588-140	A, 18, 20, 26			30	30					F1540001	F7908002	T
1.8 T, 1.9 TDI, 2.3 V5	05.99 - 05.05	1000	1020	E8589-140	A, 18, 20, 26			30	30					F1545001	F7908002	T
1.8 4motion, 1.9 TDI 4motion, 2.0 4motion	05.99 - 05.05	1030	1120	E10-85-001-05-22	A, 18			30	30					F1545001	F11-15-001-02-HA	T
1.9 TDI, 2.3 V5	05.99 - 05.05	1050	1020	E10-85-001-15-22	A, 18, 20, 26			30	30					F8592001	F7908002	T
1.9 TDI 4motion, 2.3 V5 4motion, 2.8 V6 4motion	05.99 - 05.05	1050	1120	E8591-140	A, 18			30	30					F8592001	F11-15-001-02-HA	T
Anti-Roll-Kit (Performance Stabilisatoren | *Performance Sway Bars*)																
1.4 16V, 1.6, 1.6 16V, 1.6 FSI, 2.0	05.99 - 05.05			E1540-321	A, 18, 20, 22, 45					22		nicht verstellbar *not adjustable*		AS1540310VA		T
1.4 16V, 1.6, 1.6 16V, 1.6 FSI, 2.0	05.99 - 05.05			E1540-320	A, 18, 20, 22, 45					22	25	nicht verstellbar *not adjustable*	nicht verstellbar *not adjustable*	AS1540310VA	AS1540320HA	T
1.8 T, 1.9 TDI, 2.3 V5	05.99 - 05.05			E40-85-005-01-10	A, 18, 20, 22, 45					25		nicht verstellbar *not adjustable*		AS41-85-005-01-VA		T
1.8 T, 1.9 TDI, 2.3 V5	05.99 - 05.05			E40-85-005-01-11	A, 18, 20, 22, 45					25	25	nicht verstellbar *not adjustable*	nicht verstellbar *not adjustable*	AS41-85-005-01-VA	AS1540320HA	T
B12 Pro-Kit (Performance Komplettfahrwerke | *Performance Springs+Shocks*)																
1.4 16V, 1.6, 1.6 16V, 1.6 FSI	05.99 - 05.05	930	1020	E90-85-001-11-22	A, 18, 20, 26, 78, 161			30	30					F8560001	F7908002	T
1.9 TDI Schaltgetriebe, 2.0 *1.9 TDI manual transmission, 2.0*	05.99 - 05.05	970	1020	E90-85-001-12-22	A, 18, 20, 26, 78, 161			30	30					F1540001	F7908002	T
1.8 T, 1.9 TDI, 1.9 TDI Schaltgetriebe, 2.3 V5 Schaltgetriebe *1.8 T, 1.9 TDI, 1.9 TDI manual transmission, 2.3 V5 manual transmission*	05.99 - 05.05	1000	1020	E90-85-001-13-22	A, 18, 20, 26, 78, 161			30	30					F1545001	F7908002	T
1.8 4motion, 1.9 TDI 4motion, 2.0 4motion	05.99 - 05.05	1030	1120	E90-85-001-05-22	A, 18, 78, 161			30	30					F1545001	F11-15-001-02-HA	T
1.9 TDI, 1.9 TDI Schaltgetriebe, 2.3 V5, 2.3 V5 Schaltgetriebe *1.9 TDI, 1.9 TDI manual transmission, 2.3 V5, 2.3 V5 manual transmission*	05.99 - 05.05	1050	1020	E90-85-001-14-22	A, 18, 20, 26, 78, 161			30	30					F8592001	F7908002	T
1.9 TDI 4motion, 2.3 V5 4motion, 2.8 V6 4motion	05.99 - 05.05	1050	1120	E90-85-001-06-22	A, 18, 78, 161			30	30					F8592001	F11-15-001-02-HA	T

Modell *Model*	Baujahr *Year*	Achslast Vorne kg *Front Axle Load kg*	Achslast Hinten kg *Rear Axle Load kg*	Artikel-Nr. *Part-No.*	Hinweise *Notes*	ab Nachtrag ...xx BE *from suppl. ...xx of type approval*	bis Nachtrag ...xx BE *to suppl. ...xx of type approval*	ca. Tieferl. Vorne mm *ca. Lowering Front mm*	ca. Tieferl. Hinten mm *ca. Lowering Rear mm*	Ø Vorne mm *Ø Front mm*	Ø Hinten mm *Ø Rear mm*	Verstellbarkeit Vorne *Adjustable Front*	Verstellbarkeit Hinten *Adjustable Rear*	Ersatzteilbez. Vorne *Spare Part Marking Front*	Ersatzteilbez. Hinten *Spare Part Marking Rear*	Gutachten *Homologation*
BORA Kombi (1J6) ***BORA Estate (1J6)***																
Pro-Street-S (Gewindefahrwerke - höhenverstellbar | *Coil-Overs-Adjustable Ride Hight*)																
1.8 4Motion, 2.0 4Motion, 1.9 TDI 4Motion	05.99 - 05.05	1050	1080	PSS65-85-001-02-22	A, 24, 25, 45, 160			35-65	35-65							T
1.4 16V, 1.6, 1.6 16V, 1.6 FSI, 1.8 T, 1.9 TDI, 2.0, 2.3 V5	05.99 - 05.05	1020	1080	PSS65-85-001-03-22	A, 18, 20, 24, 25, 26, 45, 160			35-65	35-65							T
CADDY III Kasten (2KA, 2KH, 2CA, 2CH) ***CADDY III Box (2KA, 2KH, 2CA, 2CH)***																
Pro-Kit (Performance Fahrwerksfedern | *Performance Springs*)																
1.2 TSI, 1.4, 1.4 16V, 1.6, 1.6 BiFuel, 1.6 TDI, 1.9 TDI, 1.9 TDI 4motion, 2.0 EcoFuel, 2.0 SDI, 2.0 TDI, 2.0 TDI 16V, 2.0 TDI 16V 4motion, 2.0 TDI 4motion	03.04 -	1030	1250	E10-85-019-01-22	A, 18, 20, 162			45	45					F11-79-004-02-VA		T
1.6 TDI, 1.9 TDI, 2.0 SDI, 2.0 TDI, 2.0 TDI 16V	03.04 -	1125	1250	E10-85-019-02-22	A, 18, 20, 162			45	45					F11-85-012-02-VA		T
CADDY III Kombi (2KB, 2KJ, 2CB, 2CJ) ***CADDY III Estate (2KB, 2KJ, 2CB, 2CJ)***																
Pro-Kit (Performance Fahrwerksfedern | *Performance Springs*)																
1.2 TSI, 1.4, 1.4 16V, 1.6, 1.6 BiFuel, 1.6 TDI, 1.9 TDI, 1.9 TDI 4motion, 2.0 EcoFuel, 2.0 SDI, 2.0 TDI, 2.0 TDI 16V, 2.0 TDI 16V 4motion, 2.0 TDI 4motion	03.04 -	1030	1250	E10-85-019-01-22	A, 18, 20, 162			45	45					F11-79-004-02-VA		T
1.6 TDI, 1.9 TDI, 2.0 SDI, 2.0 TDI, 2.0 TDI 16V	03.04 -	1125	1250	E10-85-019-02-22	A, 18, 20, 162			45	45					F11-85-012-02-VA		T
Pro-Street-S (Gewindefahrwerke - höhenverstellbar | *Coil-Overs-Adjustable Ride Hight*)																
1,2 TSI, 1.4, 1.4 16V, 1.6	03.04 -	1075	1300	PSS65-85-019-02-22	A, 18, 20, 24, 25, 35, 45, 160			50-90	50-90							
1,2 TSI, 1.4, 1.4 16V, 1.6	03.04 -	1075	1300	PSS65-85-019-03-22	A, 18, 20, 24, 25, 34, 45, 160			50-90	50-90							
1,6 TDI, 1.9 TDI, 2.0 SDI, 2.0 TDI, 2.0 TDI 16V	03.04 -	1235	1300	PSS65-85-019-04-22	A, 18, 20, 24, 25, 34, 45, 160			50-90	50-90							
CC (358)																
Pro-Kit (Performance Fahrwerksfedern | *Performance Springs*)																
1.4 TSI, 1.4 TSI Multifuel, 1.8 TSI, 2.0 TSI, 2.0 TDI	11.11 -	1110	1030	E10-85-016-08-22	A, 18, 20			25	20					F11-15-007-02-VA	F11-85-014-05-HA	ABE
2.0 TDI, 2.0 TSI	11.11 -	1170	1030	E10-85-016-13-22	A, 18, 20			25	20					F11-15-007-03-VA	F11-85-014-05-HA	ABE
2.0 TDI 4motion, 3.6 FSI 4motion	11.11 -	1170	1110	E10-85-016-09-22	A, 18			25	25					F11-15-007-03-VA	F11-15-007-15-HA	ABE
Anti-Roll-Kit (Performance Stabilisatoren | *Performance Sway Bars*)																
1.4 TSI, 1.4 TSI Multifuel, 1.8 TSI, 2.0 TSI, 2.0 TDI	11.11 -			E40-85-014-06-11	A, 18, 20, 22, 45					26	23	2-fach verstellbar *2-way adjustable*	2-fach verstellbar *2-way adjustable*	AS41-85-014-01-VA	AS41-85-014-01-HA	T
B12 Pro-Kit (Performance Komplettfahrwerke | *Performance Springs+Shocks*)																
1.4 TSI, 1.4 TSI Multifuel, 1.8 TSI, 2.0 TSI, 2.0 TDI	11.11 -	1110	1030	E90-85-016-08-22	A, 18, 20, 34, 78, 161			25	20					F11-15-007-02-VA	F11-85-014-05-HA	ABE
2.0 TDI, 2.0 TSI	11.11 -	1170	1030	E90-85-016-13-22	A, 18, 20, 34, 78, 161			25	20					F11-15-007-03-VA	F11-85-014-05-HA	ABE
2.0 TDI 4motion, 3.6 FSI 4motion	11.11 -	1170	1110	E90-85-016-09-22	A, 18, 34, 78, 161			25	25					F11-15-007-03-VA	F11-85-014-05-HA	ABE
CORRADO (53I)																
Pro-Kit (Performance Fahrwerksfedern | *Performance Springs*)																
1.8 16V, 1.8 G60, 2.0 i, 2.0 i 16V, 2.9 VR6	09.88 - 12.95	950	710	E8513-140	A, 18, 20			25-30	25					F8513001	F8513002	T
Anti-Roll-Kit (Performance Stabilisatoren | *Performance Sway Bars*)																
1.8 16V, 1.8 G60, 2.0 i, 2.0 i 16V	09.88 - 12.95			E8502-320	A, 18, 20, 22, 45					22	25	nicht verstellbar *not adjustable*	nicht verstellbar *not adjustable*	AS8502320VA	AS8502320HA	T
2.9 VR6	08.91 - 12.95			E8530-320	A, 18, 20, 22, 45					22	25	nicht verstellbar *not adjustable*	nicht verstellbar *not adjustable*	AS8530320VA	AS8502320HA	T
B12 Pro-Kit (Performance Komplettfahrwerke | *Performance Springs+Shocks*)																
1.8 16V, 1.8 G60, 2.0 i, 2.0 i 16V, 2.9 VR6	09.88 - 12.95	950	710	E90-85-033-01-22	A, 18, 20, 78, 93, 161			25-30	25					F8513001	F8513002	T
1.8 16V, 1.8 G60, 2.0 i, 2.0 i 16V, 2.9 VR6	09.88 - 12.95	950	710	E90-85-033-02-22	A, 18, 20, 78, 94, 161			25-30	25					F8513001	F8513002	T
EOS (1F7, 1F8)																
Pro-Kit (Performance Fahrwerksfedern | *Performance Springs*)																
1.4 TSI, 1.6 FSI	06.06 -	1010	1000	E10-85-018-01-22	A, 18, 20			25-30	25					F11-15-007-01-VA	F11-85-012-01-HA	T
1.4 TSI, 2.0 FSI, 2.0 TDI, 2.0 TDI 16V, 2.0 TFSI, 2.0 TSI	03.06 -	1080	1000	E10-85-018-02-22	A, 18, 20			25-30	25					F11-15-007-02-VA	F11-85-012-01-HA	T
2.0 TDI, 2.0 TDI 16V, 2.0 TFSI, 3.2 V6	03.06 -	1130	1000	E10-85-018-03-22	A, 18, 20			25-30	25					F11-15-007-03-VA	F11-85-012-01-HA	T
Anti-Roll-Kit (Performance Stabilisatoren | *Performance Sway Bars*)																
1.4 TSI, 1.6 FSI, 2.0 FSI, 2.0 TDI, 2.0 TDI 16V, 2.0 TFSI, 2.0 TSI, 3.2 V6	03.06 -			E40-85-014-06-11	A, 18, 20, 22, 45					26	23	2-fach verstellbar *2-way adjustable*	2-fach verstellbar *2-way adjustable*	AS41-85-014-01-VA	AS41-85-014-01-HA	T
Pro-Tronic (Elektronische Performance Fahrwerksmodule | *Electronic Performance Suspension Moduls*)																
Alle Motorisierungen / *all motorisation*	03.06 -			AM65-85-022-01-22	A, 175											
B12 Pro-Kit (Performance Komplettfahrwerke | *Performance Springs+Shocks*)																
1.4 TSI, 1.6 FSI	06.06 -	1010	1000	E90-85-018-01-22	A, 18, 20, 78, 161			25	25					F11-15-007-01-VA	F11-85-012-01-HA	T
1.4 TSI, 2.0 FSI, 2.0 TDI, 2.0 TDI 16V, 2.0 TFSI, 2.0 TSI	03.06 -	1080	1000	E90-85-018-02-22	A, 18, 20, 78, 161			25	25					F11-15-007-02-VA	F11-85-012-01-HA	T
2.0 TDI 16V mit DSG, 2.0 TDI mit DSG, 2.0 TFSI mit DSG, 3.2 V6 mit DSG *2.0 TDI 16V with DSG, 2.0 TDI with DSG, 2.0 TFSI with DSG, 3.2 V6 with DSG*	03.06 -	1130	1000	E90-85-018-03-22	A, 18, 20, 78, 161			25	25					F11-15-007-03-VA	F11-85-012-01-HA	T
FOX (5Z1, 5Z3)																
Pro-Kit (Performance Fahrwerksfedern | *Performance Springs*)																
1.2, 1.4, 1.4 TDI, 1.6, 1.6 Total Flex	10.03 -	870	800	E10-85-017-01-22	A, 18, 20			30	30					F11-85-008-01-VA	F7910002	T
B12 Pro-Kit (Performance Komplettfahrwerke | *Performance Springs+Shocks*)																
1.2, 1.4, 1.4 TDI, 1.6, 1.6 Total Flex	04.05 -	870	800	E90-85-017-01-22	A, 18, 20, 78, 161			30	30					F11-85-008-01-VA	F7910002	T

VOLKSWAGEN

VOLKSWAGEN

Modell *Model*	Baujahr *Year*	Achslast Vorne kg *Front Axle Load kg*	Achslast Hinten kg *Rear Axle Load kg*	Artikel-Nr. *Part-No.*	Hinweise *Notes*	ab Nachtrag ...xx BE *from suppl. ...xx of type approval*	bis Nachtrag ...xx BE *to suppl. ...xx of type approval*	ca. Tieferl. Vorne mm *ca. Lowering Front mm*	ca. Tieferl. Hinten mm *ca. Lowering Rear mm*	Ø Vorne mm *Ø Front mm*	Ø Hinten mm *Ø Rear mm*	Verstellbarkeit Vorne *Adjustable Front*	Verstellbarkeit Hinten *Adjustable Rear*	Ersatzteilbez. Vorne *Spare Part Marking Front*	Ersatzteilbez. Hinten *Spare Part Marking Rear*	Gutachten *Homologation*
GOLF I (17)																
Pro-Kit (Performance Fahrwerksfedern | *Performance Springs*)																
1.1, 1.3, 1.5, 1.5 D, 1.6, 1.6 D, 1.6 GTI, 1.6 TD, 1.8 GTI	04.74 - 07.85	785	630	E8501-140	A, 18, 20			30-40	30-35					F8501101	F8501002	T
B12 Pro-Kit (Performance Komplettfahrwerke | *Performance Springs+Shocks*)																
1.1, 1.3, 1.5, 1.5 D, 1.6, 1.6 D, 1.6 GTI, 1.6 TD, 1.8 GTI	04.74 - 07.85	785	630	E90-85-032-01-22	A, 18, 20, 78, 95, 161			30-40	30-35					F8501101	F8501002	T
GOLF I Cabriolet (155)																
Pro-Kit (Performance Fahrwerksfedern | *Performance Springs*)																
1.5, 1.6, 1.8	01.79 - 04.93	785	630	E8510-140	A, 18, 20			30-40	30-35					F8501101	F8510002	T
B12 Pro-Kit (Performance Komplettfahrwerke | *Performance Springs+Shocks*)																
1.5, 1.6, 1.8	01.79 - 04.93	785	630	E90-85-032-02-22	A, 18, 20, 78, 95, 161			30-40	30-35					F8501101	F8501002	T
GOLF II (19E, 1G1)																
Pro-Kit (Performance Fahrwerksfedern | *Performance Springs*)																
1.0, 1.3, 1.3 KAT, 1.6, 1.8, 1.8 GTI, 1.8 GTI G60, 1.8 GTI KAT, 1.8 i KAT *1.0, 1.3, 1.3 CAT, 1.6, 1.8, 1.8 GTI, 1.8 GTI CAT, 1.8 GTI G60, 1.8 i CAT*	08.83 - 12.92	840	740	E8502-140	A, 18, 20			30-40	30-35					F8502001	F8502002	T
1.6 D, 1.6 TD, 1.8 GTI 16V	08.83 - 10.91	840	740	E8509-140	A, 18, 20			20	20					F8509001	F8502002	T
Anti-Roll-Kit (Performance Stabilisatoren | *Performance Sway Bars*)																
1.0, 1.3, 1.3 KAT, 1.6, 1.6 D, 1.6 TD, 1.8, 1.8 GTI, 1.8 GTI 16V, 1.8 GTI G60, 1.8 GTI KAT, 1.8 i KAT *1.0, 1.3, 1.3 CAT, 1.6, 1.6 D, 1.6 TD, 1.8, 1.8 GTI, 1.8 GTI 16V, 1.8 GTI CAT, 1.8 GTI G60, 1.8 i CAT*	08.83 - 12.92			E8502-320	A, 18, 20, 22, 45					22	25	nicht verstellbar *not adjustable*	nicht verstellbar *not adjustable*	AS8502320VA	AS8502320HA	T
B12 Pro-Kit (Performance Komplettfahrwerke | *Performance Springs+Shocks*)																
1.0, 1.3, 1.3 KAT, 1.6, 1.8, 1.8 GTI, 1.8 GTI G60, 1.8 GTI KAT, 1.8 i KAT *1.0, 1.3, 1.3 CAT, 1.6, 1.8, 1.8 GTI, 1.8 GTI CAT, 1.8 GTI G60, 1.8 i CAT*	08.83 - 12.92	840	740	E90-85-009-01-22	A, 18, 20, 78, 161			30-40	30-35					F8502001	F8502002	T
1.6 D, 1.6 TD, 1.8 GTI 16V	08.83 - 10.91	840	740	E90-85-009-02-22	A, 18, 20, 78, 161			20	20					F8509001	F8502002	T
Pro-Street-S (Gewindefahrwerke - höhenverstellbar | *Coil-Overs-Adjustable Ride Hight*)																
1.0, 1.3, 1.3 KAT, 1.6, 1.6 D, 1.6 TD, 1.8, 1.8 GTI, 1.8 GTI 16V, 1.8 GTI G60, 1.8 GTI KAT, 1.8 i KAT *1.0, 1.3, 1.3 CAT, 1.6, 1.6 D, 1.6 TD, 1.8, 1.8 GTI, 1.8 GTI 16V, 1.8 GTI CAT, 1.8 GTI G60, 1.8 i CAT*	08.83 - 12.92	840	740	PSS65-85-003-01-22	A, 24, 25, 26, 45, 160			30-65	30-65							T
GOLF III (1H1)																
Pro-Kit (Performance Fahrwerksfedern | *Performance Springs*)																
1.4, 1.6, 1.8, 1.9 D, 1.9 TD,GTD, 1.9 SDI, 1.9 TDI, 2.0, 2.0 GTI 16V, 2.8 VR6	10.91 - 08.94	980	840	E8530-140	A, 18, 19, 20, 184			30	30					F8530001	F8502002	T
1.4, 1.6, 1.8, 1.9 D, 1.9 SDI, 1.9 TD,GTD, 1.9 TDI, 2.0, 2.0 GL, 2.0 GTI 16V, 2.8 VR6	10.91 - 09.97	980	840	E8547-140	A, 18, 19, 20, 184			30	30					F8547001	F8502002	T
Sportline (Performance Fahrwerksfedern Sport | *Sport Performance Springs*)																
1.4, 1.6, 1.8, 1.9 D, 1.9 SDI, 1.9 TD,GTD, 1.9 TDI, 2.0, 2.0 GL, 2.0 GTI 16V, 2.8 VR6	10.91 - 09.97	950	840	E20-85-003-01-22	A, 20			45-50	30-35					F21-85-003-01-VA	F21-85-003-01-HA	T
Anti-Roll-Kit (Performance Stabilisatoren | *Performance Sway Bars*)																
1.4, 1.6, 1.8, 1.9 D, 1.9 SDI, 1.9 TD,GTD, 1.9 TDI, 2.0	10.91 - 08.97			E8502-320	A, 18, 20, 22, 45					22	25	nicht verstellbar *not adjustable*	nicht verstellbar *not adjustable*	AS8502320VA	AS8502320HA	T
2.0 GTI 16V, 2.8 VR6	01.92 - 09.97			E8530-320	A, 18, 20, 22, 45					22	25	nicht verstellbar *not adjustable*	nicht verstellbar *not adjustable*	AS8530320VA	AS8502320HA	T
B12 Pro-Kit (Performance Komplettfahrwerke | *Performance Springs+Shocks*)																
1.4, 1.6, 1.8, 1.9 D, 1.9 TD,GTD, 1.9 TDI, 2.0, 2.0 GTI 16V, 2.8 VR6	10.91 - 08.94	980	840	E90-85-003-01-22	A, 18, 20, 78, 93, 161			30	30					F8530001	F8502002	T
1.4, 1.6, 1.8, 1.9 D, 1.9 SDI, 1.9 TD,GTD, 1.9 TDI, 1.9 TDI Syncro, 2.0, 2.0 GL, 2.0 GTI 16V, 2.8 VR6	09.94 - 09.97	980	840	E90-85-003-02-22	A, 18, 20, 78, 94, 161			30	30					F8547001	F8502002	T
B12 Sportline (Performance Komplettfahrwerke Sport | *Sport Performance Springs+Shocks*)																
1.8, 1.9 D, 1.9 TD,GTD, 1.9 TDI, 2.0, 2.0 GTI 16V, 2.8 VR6	11.91 - 08.94	950	840	E95-85-003-01-22	A, 18, 20, 78, 93, 161			45-50	30-35					F21-85-003-01-VA	F21-85-003-01-HA	T
1.4, 1.6, 1.8, 1.9 D, 1.9 SDI, 1.9 TD,GTD, 1.9 TDI, 2.0, 2.0 GL, 2.0 GTI 16V, 2.8 VR6	09.94 - 09.97	950	840	E95-85-003-03-22	A, 18, 20, 78, 94, 161			45-50	30-35					F21-85-003-01-VA	F21-85-003-01-HA	T
Pro-Street-S (Gewindefahrwerke - höhenverstellbar | *Coil-Overs-Adjustable Ride Hight*)																
1.4, 1.6, 1.8, 1.9 D, 1.9 SDI, 1.9 TD,GTD, 1.9 TDI, 2.0, 2.0 GL, 2.0 GTI 16V, 2.8 VR6	10.91 - 09.97	890	880	PSS65-85-003-01-22	A, 20, 24, 25, 26, 45, 160			45-80	45-80							T
1.4, 1.6, 1.8, 1.9 D, 1.9 SDI, 1.9 TD,GTD, 1.9 TDI, 2.0 GL, 2.0 GTI 16V, 2.8 VR6	10.91 - 09.97	980	880	PSS65-85-003-02-22	A, 20, 24, 25, 26, 45, 160			45-80	45-80							T
GOLF III Cabriolet (1E7)																
Pro-Kit (Performance Fahrwerksfedern | *Performance Springs*)																
1.8, 2.0	07.93 - 08.94	980	840	E8530-140	A, 18, 19, 20, 184			30	30					F8530001	F8502002	T
1.6, 1.8, 1.9 TDI, 2.0	09.94 - 05.98	980	840	E8550-140	A, 18, 19, 20, 184			30	30					F8547001	F8550002	T
Anti-Roll-Kit (Performance Stabilisatoren | *Performance Sway Bars*)																
1.6, 1.8, 1.9 TDI, 2.0	07.93 - 05.98			E8502-320	A, 18, 20, 22, 45					22	25	nicht verstellbar *not adjustable*	nicht verstellbar *not adjustable*	AS8502320VA	AS8502320HA	T
B12 Pro-Kit (Performance Komplettfahrwerke | *Performance Springs+Shocks*)																
1.6, 1.8, 1.9 TDI, 2.0	09.94 - 05.98	980	840	E90-85-003-05-22	A, 18, 20, 78, 93, 161			30	30					F8547001	F8550002	T
1.8, 2.0	07.93 - 08.94	980	840	E90-85-003-06-22	A, 18, 20, 78, 93, 161			30	30					F8530001	F8502002	T
Pro-Street-S (Gewindefahrwerke - höhenverstellbar | *Coil-Overs-Adjustable Ride Hight*)																
1.6, 1.8, 1.9 TDI, 2.0	07.93 - 05.98	890	880	PSS65-85-003-01-22	A, 20, 24, 25, 26, 45, 160			45-80	45-80							T
1.6, 1.8, 1.9 TDI, 2.0	07.93 - 05.98	980	880	PSS65-85-003-02-22	A, 20, 24, 25, 26, 45, 160			45-80	45-80							T
GOLF IV (1J1)																
Pro-Kit (Performance Fahrwerksfedern | *Performance Springs*)																
1.4 16V, 1.6, 1.6 16V, 1.6 FSI	08.97 - 06.05	930	925	E8560-140	A, 18, 20, 26			30	30					F8560001	F1540002	T
1.8, 1.9 SDI, 1.9 TDI, 2.0	08.97 - 06.05	970	925	E8561-140	A, 18, 20, 26			30	30					F1540001	F1540002	T
1.8 T, 1.8 T GTI, 1.9 TDI, 2.3 V5	08.97 - 06.05	1000	925	E8564-140	A, 18, 20, 26			30	30					F1545001	F1540002	T
1.8 4motion, 1.9 TDI 4motion, 2.0 4motion	05.98 - 06.05	1030	1120	E10-85-001-05-22	A, 18			30	30					F1545001	F11-15-001-02-HA	T
1.9 TDI, 2.3 V5	08.97 - 06.05	1050	925	E10-85-001-14-22	A, 18, 20, 26			30	30					F8592001	F1540002	T
1.9 TDI 4motion, 2.3 V5 4motion, 2.8 V6 4motion	07.98 - 06.05	1050	1120	E8591-140	A, 18			30	30					F8592001	F11-15-001-02-HA	T

VOLKSWAGEN

Modell *Model*	Baujahr *Year*	Achslast Vorne kg *Front Axle Load kg*	Achslast Hinten kg *Rear Axle Load kg*	Artikel-Nr. *Part-No.*	Hinweise *Notes*	ab Nachtrag ...xx BE *from suppl. ...xx of type approval*	bis Nachtrag ...xx BE *to suppl. ...xx of type approval*	ca. Tieferl. Vorne mm *ca. Lowering Front mm*	ca. Tieferl. Hinten mm *ca. Lowering Rear mm*	Ø Vorne mm *Ø Front mm*	Ø Hinten mm *Ø Rear mm*	Verstellbarkeit Vorne *Adjustable Front*	Verstellbarkeit Hinten *Adjustable Rear*	Ersatzteilbez. Vorne *Spare Part Marking Front*	Ersatzteilbez. Hinten *Spare Part Marking Rear*	Gutachten *Homologation*
GOLF IV (1J1)																
Sportline (Performance Fahrwerksfedern Sport | *Sport Performance Springs*)																
1.4 16V, 1.6, 1.6 16V, 1.6 FSI, 1.8, 1.8 T, 1.8 T GTI, 1.9 SDI, 1.9 TDI, 2.0	08.97 - 06.05	950	1000	E20-85-001-01-22	A, 18, 20, 26			45-50	30-35					F21-85-001-01-VA	F21-85-001-01-HA	T
1.8, 1.8 T, 1.8 T GTI, 1.9 TDI, 2.3 V5	08.97 - 06.05	1000	1000	E20-85-001-02-22	A, 18, 20, 26			45-50	30-35					F21-85-003-01-VA	F21-85-001-01-HA	T
Anti-Roll-Kit (Performance Stabilisatoren | *Performance Sway Bars*)																
1.4 16V, 1.6, 1.6 16V, 1.6 FSI, 1.8, 2.0	08.97 - 06.05			E1540-321	A, 18, 20, 22, 45					22		nicht verstellbar *not adjustable*		AS1540310VA		T
1.4 16V, 1.6, 1.6 16V, 1.6 FSI, 1.8, 2.0	08.97 - 06.05			E1540-320	A, 18, 20, 22, 45					22	25	nicht verstellbar *not adjustable*	nicht verstellbar *not adjustable*	AS1540310VA	AS1540320HA	T
1.8 T, 1.8 T GTI, 1.9 SDI, 1.9 TDI, 2.3 V5	08.97 - 06.05			E40-85-005-01-10	A, 18, 20, 22, 45					25		nicht verstellbar *not adjustable*		AS41-85-005-01-VA		T
1.8 T, 1.8 T GTI, 1.9 SDI, 1.9 TDI, 2.3 V5	08.97 - 06.05			E40-85-005-01-11	A, 18, 20, 22, 45					25	25	nicht verstellbar *not adjustable*	nicht verstellbar *not adjustable*	AS41-85-005-01-VA	AS1540320HA	T
B12 Pro-Kit (Performance Komplettfahrwerke | *Performance Springs+Shocks*)																
1.4 16V, 1.6, 1.6 16V, 1.6 FSI	08.97 - 06.05	930	925	E90-85-001-01-22	A, 18, 20, 78, 26, 161			30	30					F8560001	F1540002	T
1.8, 1.9 SDI, 1.9 TD Schaltgetriebe, 2.0 *1.8, 1.9 SDI, 1.9 TD manual transmission, 2.0*	08.97 - 06.05	970	925	E90-85-001-02-22	A, 18, 20, 78, 26, 161			30	30					F1540001	F1540002	T
1.9 TDI Schaltgetriebe *1.9 TDI manual transmission*	08.97 - 05.04	970	925	E90-85-001-02-22	A, 18, 20, 26, 78, 161			30	30					F1540001	F1540002	T
1.8 T GTI	08.01 - 06.05	1000	925	E90-85-001-03-22	A, 18, 20, 26, 78, 161			10	10					F1545001	F1540002	T
1.8 T, 1.9 TDI, 1.9 TDI Schaltgetriebe, 2.3 V5 Schaltgetriebe *1.8 T, 1.9 TDI, 1.9 TDI manual transmission, 2.3 V5 manual transmission*	08.97 - 06.05	1000	925	E90-85-001-03-22	A, 18, 20, 26, 78, 161			30	30					F1545001	F1540002	T
1.8 4motion, 1.9 TDI 4motion, 2.0 4motion	05.98 - 06.05	1030	1120	E90-85-001-05-22	A, 18, 78, 161			30	30					F1545001	F11-15-001-02-HA	T
1.9 TDI, 1.9 TDI Schaltgetriebe, 2.3 V5, 2.3 V5 Schaltgetriebe *1.9 TDI, 1.9 TDI manual transmission, 2.3 V5, 2.3 V5 manual transmission*	08.97 - 06.05	1050	925	E90-85-001-04-22	A, 18, 20, 26, 78, 161			30	30					F8592001	F1540002	T
1.9 TDI 4motion, 2.3 V5 4motion, 2.8 V6 4motion	07.98 - 06.05	1050	1120	E90-85-001-06-22	A, 18, 78, 161			30	30					F8592001	F11-15-001-02-HA	T
B12 Sportline (Performance Komplettfahrwerke Sport | *Sport Performance Springs+Shocks*)																
1.8 T GTI	08.01 - 06.05	950	1000	E95-85-001-01-22	A, 18, 20, 26, 78, 161			25-30	10-15					F21-85-001-01-VA	F21-85-001-01-HA	T
1.4 16V, 1.6, 1.6 16V, 1.6 FSI, 1.8, 1.8 T, 1.9 SDI, 1.9 TD, 1.9 TDI, 2.0	08.97 - 06.05	950	1000	E95-85-001-01-22	A, 18, 20, 26, 78, 161			45-50	30-35					F21-85-001-01-VA	F21-85-001-01-HA	T
1.8 T GTI	08.01 - 06.05	1000	1000	E95-85-001-02-22	A, 18, 20, 26, 78, 161			25-30	10-15					F21-85-003-01-VA	F21-85-001-01-HA	T
1.8, 1.8 T, 1.9 TD, 1.9 TDI, 2.0, 2.3 V5	08.97 - 06.05	1000	1000	E95-85-001-02-22	A, 18, 20, 26, 78, 161			45-50	30-35					F21-85-003-01-VA	F21-85-001-01-HA	T
Pro-Street-S (Gewindefahrwerke - höhenverstellbar | *Coil-Overs-Adjustable Ride Hight*)																
1.4 16V, 1.6, 1.6 16V, 1.6 FSI, 1.8, 1.8 T, 1.8 T GTI, 1.9 SDI, 1.9 TD, 1.9 TDI, 2.0, 2.3 V5	08.97 - 06.05	1030	1025	PSS65-85-001-01-22	A, 20, 24, 25, 26, 45, 160			35-65	35-65							T
1.8 4motion, 1.9 TDI 4motion, 2.0 4motion	08.97 - 06.05	1050	1080	PSS65-85-001-02-22	A, 24, 25, 45, 160			35-65	35-65							T
2.3 V5 4motion, 2.8 V6 4motion	12.98 - 06.05	1110	1080	PSS65-85-001-05-22	A, 24, 25, 45, 160			35-65	35-65							T
3.2 R32 4motion	09.02 - 06.05	1110	1080	PSS65-85-001-04-22	A, 24, 25, 45, 160			35-65	35-65							T
GOLF IV Cabriolet (1E7)																
Pro-Kit (Performance Fahrwerksfedern | *Performance Springs*)																
1.6, 1.8, 1.9 TDI, 2.0	09.94 - 06.02	980	840	E8550-140	A, 18, 19, 20, 184			30	30					F8547001	F8550002	T
Anti-Roll-Kit (Performance Stabilisatoren | *Performance Sway Bars*)																
1.6, 1.8, 1.9 TDI, 2.0	06.98 - 06.02			E8502-320	A, 18, 20, 22, 45					22	25	nicht verstellbar *not adjustable*	nicht verstellbar *not adjustable*	AS8502320VA	AS8502320HA	T
B12 Pro-Kit (Performance Komplettfahrwerke | *Performance Springs+Shocks*)																
1.6, 1.8, 1.9 TDI, 2.0	06.98 - 06.02	980	840	E90-85-003-05-22	A, 18, 20, 78, 94, 161			30	30					F8547001	F8550002	T
Pro-Street-S (Gewindefahrwerke - höhenverstellbar | *Coil-Overs-Adjustable Ride Hight*)																
1.6, 1.8, 1.9 TDI, 2.0	06.98 - 06.02	890	880	PSS65-85-003-01-22	A, 20, 24, 25, 26, 45, 160			45-80	45-80							T
1.6, 1.8, 1.9 TDI, 2.0	06.98 - 06.02	980	880	PSS65-85-003-02-22	A, 20, 24, 25, 26, 45, 160			45-80	45-80							T
GOLF IV Variant (1J5)																
Pro-Kit (Performance Fahrwerksfedern | *Performance Springs*)																
1.4 16V, 1.6, 1.6 16V, 1.6 FSI	05.99 - 06.06	930	1020	E8587-140	A, 18, 20, 26			30	30					F8560001	F7908002	T
1.9 SDI, 1.9 TDI, 2.0	05.99 - 06.06	970	1020	E8588-140	A, 18, 20, 26			30	30					F1540001	F7908002	T
1.8 T, 1.9 TDI, 2.3 V5	05.99 - 06.06	1000	1020	E8589-140	A, 18, 20, 26			30	30					F1545001	F7908002	T
1.8 4motion, 1.9 TDI 4motion, 2.0 4motion	05.99 - 06.06	1030	1120	E10-85-001-05-22	A, 18			30	30					F1545001	F11-15-001-02-HA	T
1.9 TDI, 2.3 V5	05.99 - 06.06	1050	1020	E10-85-001-15-22	A, 18, 20, 26			30	30					F8592001	F7908002	T
1.9 TDI 4motion, 2.3 V5 4motion, 2.8 V6 4motion	05.99 - 06.06	1050	1120	E8591-140	A, 18			30	30					F8592001	F11-15-001-02-HA	T
Anti-Roll-Kit (Performance Stabilisatoren | *Performance Sway Bars*)																
1.4 16V, 1.6, 1.6 16V, 1.6 FSI, 2.0	05.99 - 06.06			E1540-321	A, 18, 20, 22, 45					22		nicht verstellbar *not adjustable*		AS1540310VA		T
1.4 16V, 1.6, 1.6 16V, 1.6 FSI, 2.0	05.99 - 06.06			E1540-320	A, 18, 20, 22, 45					22	25	nicht verstellbar *not adjustable*	nicht verstellbar *not adjustable*	AS1540310VA	AS1540320HA	T
1.8 T, 1.9 SDI, 1.9 TDI, 2.3 V5	05.99 - 06.06			E40-85-005-01-10	A, 18, 20, 22, 45					25		nicht verstellbar *not adjustable*		AS41-85-005-01-VA		T
1.8 T, 1.9 SDI, 1.9 TDI, 2.3 V5	05.99 - 06.06			E40-85-005-01-11	A, 18, 20, 22, 45					25	25	nicht verstellbar *not adjustable*	nicht verstellbar *not adjustable*	AS41-85-005-01-VA	AS1540320HA	T
B12 Pro-Kit (Performance Komplettfahrwerke | *Performance Springs+Shocks*)																
1.4 16V, 1.6, 1.6 16V, 1.6 FSI	05.99 - 06.06	930	1020	E90-85-001-11-22	A, 18, 20, 26, 78, 161			30	30					F8560001	F7908002	T
1.9 SDI, 1.9 TDI Schaltgetriebe, 2.0 *1.9 SDI, 1.9 TDI manual transmission, 2.0*	05.99 - 06.06	970	1020	E90-85-001-12-22	A, 18, 20, 26, 78, 161			30	30					F1540001	F7908002	T
1.8 T, 1.9 TDI, 1.9 TDI Schaltgetriebe, 2.3 V5 Schaltgetriebe *1.8 T, 1.9 TDI, 1.9 TDI manual transmission, 2.3 V5 manual transmission*	05.99 - 06.06	1000	1020	E90-85-001-13-22	A, 18, 20, 26, 78, 161			30	30					F1545001	F7908002	T
1.8 4motion, 1.9 TDI 4motion, 2.0 4motion	05.99 - 06.06	1030	1120	E90-85-001-05-22	A, 18, 78, 161			30	30					F1545001	F11-15-001-02-HA	T

VOLKSWAGEN

Modell *Model*	Baujahr *Year*	Achslast Vorne kg *Front Axle Load kg*	Achslast Hinten kg *Rear Axle Load kg*	Artikel-Nr. *Part-No.*	Hinweise *Notes*	ab Nachtrag ...xx BE *from suppl. ...xx of type approval*	bis Nachtrag ...xx BE *to suppl. ...xx of type approval*	ca. Tieferl. Vorne mm *ca. Lowering Front mm*	ca. Tieferl. Hinten mm *ca. Lowering Rear mm*	Ø Vorne mm *Ø Front mm*	Ø Hinten mm *Ø Rear mm*	Verstellbarkeit Vorne *Adjustable Front*	Verstellbarkeit Hinten *Adjustable Rear*	Ersatzteilbez. Vorne *Spare Part Marking Front*	Ersatzteilbez. Hinten *Spare Part Marking Rear*	Gutachten *Homologation*
GOLF IV Variant (1J5)																
B12 Pro-Kit (Performance Komplettfahrwerke | *Performance Springs+Shocks*)																
1.9 TDI, 1.9 TDI Schaltgetriebe, 2.3 V5, 2.3 V5 Schaltgetriebe *1.9 TDI, 1.9 TDI manual transmission, 2.3 V5, 2.3 V5 manual transmission*	05.99 - 06.06	1050	1020	E90-85-001-14-22	A, 18, 20, 26, 78, 161			30	30					F8592001	F7908002	T
1.9 TDI 4motion, 2.3 V5 4motion, 2.8 V6 4motion	05.99 - 06.06	1050	1120	E90-85-001-06-22	A, 18, 78, 161			30	30					F8592001	F11-15-001-02-HA	T
Pro-Street-S (Gewindefahrwerke - höhenverstellbar | *Coil-Overs-Adjustable Ride Hight*)																
1.4 16V, 1.6, 1.6 16V, 1.6 FSI, 1.8 T, 1.9 SDI, 1.9 TDI, 2.0, 2.3 V5	05.99 - 06.06	1020	1080	PSS65-85-001-03-22	A, 20, 24, 25, 26, 45, 160			35-65	35-65							T
1.8 4motion, 1.9 TDI 4motion, 2.0 4motion	05.99 - 06.06	1050	1080	PSS65-85-001-02-22	A, 24, 25, 45, 160			35-65	35-65							T
2.3 V5 4motion, 2.8 V6 4motion	05.99 - 06.06	1110	1080	PSS65-85-001-05-22	A, 24, 25, 45, 160			35-65	35-65							T
GOLF PLUS (5M1, 521)																
Pro-Kit (Performance Fahrwerksfedern | *Performance Springs*)																
1.2 TSI, 1.4 16V, 1.4 FSI, 1.6, 1.6 FSI, 1.6 MultiFuel	01.05 -	1010	1010	E10-85-014-10-22	A, 18, 20			30	30					F11-15-007-01-VA	F11-85-014-05-HA	ABE
1.2 TSI, 1.4 TSI, 1.6, 1.6 FSI, 1.6 MultiFuel, 1.9 TDI, 2.0 FSI	01.05 -	1080	1010	E10-85-014-11-22	A, 18, 20			30	30					F11-15-007-02-VA	F11-85-014-05-HA	ABE
1.6 TDI, 1.9 TDI, 2.0 TDI, 2.0 TDI 16V	01.05 -	1150	1010	E10-85-014-12-22	A, 18, 20			30	30					F11-15-007-03-VA	F11-85-014-05-HA	ABE
Sportline (Performance Fahrwerksfedern Sport | *Sport Performance Springs*)																
1.2 TSI, 1.4 16V, 1.4 FSI, 1.4 TSI, 1.6, 1.6 FSI, 1.6 MultiFuel	01.05 -	1040	1010	E20-85-014-03-22	A, 18, 20			45-50	30-35					F21-15-007-01-VA	F21-15-007-01-HA	ABE
1.4 TSI, 1.6, 1.6 FSI, 1.6 MultiFuel, 1.6 TDI, 1.9 TDI, 2.0 FSI, 2.0 TDI, 2.0 TDI 16V	01.05 -	1130	1010	E20-85-014-04-22	A, 18, 20			45-50	30-35					F21-15-007-02-VA	F21-15-007-01-HA	ABE
Anti-Roll-Kit (Performance Stabilisatoren | *Performance Sway Bars*)																
1.2 TSI, 1.4 16V, 1.4 FSI, 1.4 TSI, 1.6, 1.6 FSI, 1.6 MultiFuel, 1.6 TDI, 1.9 TDI, 2.0 FSI, 2.0 TDI, 2.0 TDI 16V	01.05 -			E40-85-014-06-11	A, 18, 20, 22, 45					26	23	2-fach verstellbar *2-way adjustable*	2-fach verstellbar *2-way adjustable*	AS41-85-014-01-VA	AS41-85-014-01-HA	T
B12 Pro-Kit (Performance Komplettfahrwerke | *Performance Springs+Shocks*)																
1.2 TSI, 1.4 16V, 1.4 FSI, 1.6, 1.6 FSI	01.05 -	1010	1010	E90-85-014-08-22	A, 18, 20, 34, 78, 124, 161			30	30					F11-15-007-01-VA	F11-85-014-05-HA	ABE
1.2 TSI, 1.4 16V, 1.4 FSI, 1.6, 1.6 FSI	01.05 -	1010	1010	E90-85-014-07-22	A, 18, 20, 35, 78, 122, 161			30	30					F11-15-007-01-VA	F11-85-014-05-HA	ABE
1.2 TSI mit DSG *1.2 TSI with DSG*	11.09 -	1080	1010	E90-85-014-10-22	A, 18, 20, 34, 78, 107, 124, 161			30	30					F11-15-007-02-VA	F11-85-014-05-HA	ABE
1.2 TSI mit DSG, 1.4 TSI, 1.6, 1.6 FSI, 1.9 TDI, 2.0 FSI *1.2 TSI with DSG, 1.4 TSI, 1.6, 1.6 FSI, 1.9 TDI, 2.0 FSI*	01.05 -	1080	1010	E90-85-014-09-22	A, 18, 20, 35, 78, 122, 161			30	30					F11-15-007-02-VA	F11-85-014-05-HA	ABE
1.4 TSI, 1.6, 1.6 FSI, 1.9 TDI, 2.0 FSI	01.05 -	1080	1010	E90-85-014-10-22	A, 18, 20, 34, 78, 124, 161			30	30					F11-15-007-02-VA	F11-85-014-05-HA	ABE
1.6 TDI, 2.0 TDI	05.05 -	1150	1010	E90-85-014-12-22	A, 18, 20, 34, 78, 124, 161			30	30					F11-15-007-03-VA	F11-85-014-05-HA	ABE
1.4 TSI, 1.6, 1.6 FSI, 1.9 TDI, 2.0 FSI	01.05 -	1150	1010	E90-85-014-10-22	A, 18, 20, 34, 78, 124, 161			30	30					F11-15-007-02-VA	F11-85-014-05-HA	ABE
1.6 TDI, 2.0 TDI	05.05 -	1150	1010	E90-85-014-12-22	A, 18, 20, 34, 78, 124, 161			30	30					F11-15-007-03-VA	F11-85-014-05-HA	ABE
1.6 TDI, 2.0 TDI	05.05 -	1150	1010	E90-85-014-11-22	A, 18, 20, 35, 78, 122, 161			30	30					F11-15-007-03-VA	F11-85-014-05-HA	ABE
1.9 TDI mit DSG *1.9 TDI with DSG*	01.05 - 01.09	1150	1010	E90-85-014-12-22	A, 18, 20, 34, 78, 107, 124, 161			30	30					F11-15-007-03-VA	F11-85-014-05-HA	ABE
1.9 TDI mit DSG *1.9 TDI with DSG*	01.05 - 01.09	1150	1010	E90-85-014-11-22	A, 18, 20, 35, 78, 107, 122, 161			30	30					F11-15-007-03-VA	F11-85-014-05-HA	ABE
B12 Sportline (Performance Komplettfahrwerke Sport | *Sport Performance Springs+Shocks*)																
1.2 TSI, 1.4 16V, 1.4 FSI, 1.4 TSI, 1.6, 1.6 FSI	01.05 -	1040	1010	E95-85-014-06-22	A, 18, 20, 34, 78, 124, 161			45-50	30-35					F21-15-007-01-VA	F21-15-007-01-HA	ABE
1.2 TSI, 1.4 16V, 1.4 FSI, 1.4 TSI, 1.6, 1.6 FSI, 2.0 TDI	01.05 -	1040	1010	E95-85-014-05-22	A, 18, 20, 35, 78, 122, 161			45-50	30-35					F21-15-007-01-VA	F21-15-007-01-HA	ABE
1.4 TSI mit DSG *1.4 TSI with DSG*	05.06 -	1130	1010	E95-85-014-08-22	A, 18, 20, 34, 78, 107, 124, 161			45-50	30-35					F21-15-007-02-VA	F21-15-007-01-HA	ABE
1.4 TSI mit DSG *1.4 TSI with DSG*	05.06 -	1130	1010	E95-85-014-07-22	A, 18, 20, 35, 78, 107, 122, 161			45-50	30-35					F21-15-007-02-VA	F21-15-007-01-HA	ABE
1.6, 1.6 FSI, 1.6 TDI, 1.9 TDI, 2.0 FSI, 2.0 TDI	01.05 -	1130	1010	E95-85-014-08-22	A, 18, 20, 34, 78, 124, 161			45-50	30-35					F21-15-007-02-VA	F21-15-007-01-HA	ABE
1.6, 1.6 FSI, 1.6 TDI, 1.9 TDI, 2.0 FSI, 2.0 TDI	01.05 -	1130	1010	E95-85-014-07-22	A, 18, 20, 35, 78, 122, 161			45-50	30-35					F21-15-007-02-VA	F21-15-007-01-HA	ABE
Pro-Street-S (Gewindefahrwerke - höhenverstellbar | *Coil-Overs-Adjustable Ride Hight*)																
1.2 TSI, 1.4 16V, 1.4 FSI, 1.4 TSI, 1.6, 1.6 FSI, 1.6 MultiFuel, 1.6 TDI, 1.9 TDI, 2.0 FSI, 2.0 TDI, 2.0 TDI 16V	01.05 -	1035	1150	PSS65-85-014-01-22	A, 20, 24, 34, 45, 101, 160			35-65	35-65							T
1.2 TSI, 1.4 16V, 1.4 FSI, 1.4 TSI, 1.6, 1.6 FSI, 1.6 MultiFuel, 1.6 TDI, 1.9 TDI, 2.0 FSI, 2.0 TDI, 2.0 TDI 16V	01.05 -	1035	1150	PSS65-85-014-02-22	A, 20, 24, 35, 45, 101, 160			35-65	35-65							T
1.2 TSI, 1.4 16V, 1.4 FSI, 1.4 TSI, 1.6, 1.6 FSI, 1.6 MultiFuel, 1.6 TDI, 1.9 TDI, 2.0 FSI, 2.0 TDI, 2.0 TDI 16V	01.05 -	1105	1150	PSS65-85-014-03-22	A, 20, 24, 34, 45, 101, 160			35-65	35-65							T
1.2 TSI, 1.4 16V, 1.4 FSI, 1.4 TSI, 1.6, 1.6 FSI, 1.6 MultiFuel, 1.6 TDI, 1.9 TDI, 2.0 FSI, 2.0 TDI, 2.0 TDI 16V	01.05 -	1105	1150	PSS65-85-014-04-22	A, 20, 24, 35, 45, 101, 160			35-65	35-65							T
1.2 TSI, 1.4 16V, 1.4 FSI, 1.4 TSI, 1.6, 1.6 FSI, 1.6 MultiFuel, 1.6 TDI, 1.9 TDI, 2.0 FSI, 2.0 TDI, 2.0 TDI 16V	01.05 -	1170	1150	PSS65-85-014-05-22	A, 20, 24, 34, 45, 101, 160			35-65	35-65							T
1.2 TSI, 1.4 16V, 1.4 FSI, 1.4 TSI, 1.6, 1.6 FSI, 1.6 MultiFuel, 1.6 TDI, 1.9 TDI, 2.0 FSI, 2.0 TDI, 2.0 TDI 16V	01.05 -	1170	1150	PSS65-85-014-06-22	A, 20, 24, 35, 45, 101, 160			35-65	35-65							T
GOLF V (1K1)																
Pro-Kit (Performance Fahrwerksfedern | *Performance Springs*)																
1.4, 1.4 FSI, 1.6, 1.6 FSI, 1.6 Multifuel	10.03 - 11.08	1010	1010	E10-85-014-05-22	A, 18, 20, 58			30	30					F11-15-007-01-VA	F11-85-014-05-HA	ABE
1.4TSI, 1.6, 1.6 FSI, 1.6 Multifuel, 2.0, 2.0 FSI, 1.9 TDI	10.03 - 11.08	1080	1010	E10-85-014-06-22	A, 18, 20, 58			30	30					F11-15-007-02-VA	F11-85-014-05-HA	ABE
1.9 TDI, 2.0 TDI, 2.0 TDI 16V	10.03 - 11.08	1150	1010	E10-85-014-07-22	A, 18, 20, 58			30	30					F11-15-007-03-VA	F11-85-014-05-HA	ABE
2.0 FSI 4Motion, 1.9 TDI 4Motion, 2.0 TDI 4Motion, 2.0 TDI 16V 4Motion	08.04 - 11.08	1110	980	E10-85-014-16-22	A, 18			30	30					F11-15-007-02-VA	F11-85-014-05-HA	ABE

VOLKSWAGEN

Modell *Model*	Baujahr *Year*	Achslast Vorne kg *Front Axle Load kg*	Achslast Hinten kg *Rear Axle Load kg*	Artikel-Nr. *Part-No.*	Hinweise *Notes*	ab Nachtrag ...xx BE *from suppl. ...xx of type approval*	bis Nachtrag ...xx BE *to suppl. ...xx of type approval*	ca. Tieferl. Vorne mm *ca. Lowering Front mm*	ca. Tieferl. Hinten mm *ca. Lowering Rear mm*	Ø Vorne mm *Ø Front mm*	Ø Hinten mm *Ø Rear mm*	Verstellbarkeit Vorne *Adjustable Front*	Verstellbarkeit Hinten *Adjustable Rear*	Ersatzteilbez. Vorne *Spare Part Marking Front*	Ersatzteilbez. Hinten *Spare Part Marking Rear*	Gutachten *Homologation*
GOLF V (1K1)																
Sportline (Performance Fahrwerksfedern Sport | *Sport Performance Springs*)																
1.4, 1.4 FSI, 1.6, 1.6 FSI, 1.6 Multifuel, 2.0, 2.0 FSI	10.03 - 11.08	1040	930	E20-85-014-01-22	A, 18, 20, 58			45-50	30-35					F21-15-007-01-VA	F21-85-014-01-HA	ABE
1.4 TSI, 1.8 GTI, 2.0 GTI	10.04 - 02.09	1040	930	E20-85-014-01-22	A, 18, 20			20-25	20					F21-15-007-01-VA	F21-85-014-01-HA	ABE
1.4 TSI, 1.8 GTI, 2.0 GTI	10.04 - 02.09	1130	930	E20-85-014-02-22	A, 18, 20			20-25	20					F21-15-007-02-VA	F21-85-014-01-HA	ABE
2.0 FSI, 1.9 TDI, 2.0 TDI, 2.0 TDI 16V	10.03 - 11.08	1130	930	E20-85-014-02-22	A, 18, 20, 58			45-50	30-35					F21-15-007-02-VA	F21-85-014-01-HA	ABE
Anti-Roll-Kit (Performance Stabilisatoren | *Performance Sway Bars*)																
1.4, 1.4 FSI, 1.6, 1.6 FSI, 1.6 Multifuel, 2.0, 2.0 FSI, 2.0 TFSI, 1.9 TDI, 2.0 TDI, 2.0 TDI 16V, GT, GTI	10.03 - 02.09			E40-85-014-06-11	A, 18, 20, 22, 45					26	23	2-fach verstellbar *2-way adjustable*	2-fach verstellbar *2-way adjustable*	AS41-85-014-01-VA	AS41-85-014-01-HA	T
2.0 FSI 4Motion, 1.9 TDI 4Motion, 2.0 TDI, 2.0 TDI 4Motion, 2.0 TDI 16V 4Motion, 3.2 R32 4motion	10.03 - 02.09			E40-85-014-08-11	A, 18, 22, 45					26 Rohr *26 tube*	22 Rohr *22 tube*	2-fach verstellbar *2-way adjustable*	2-fach verstellbar *2-way adjustable*	AS41-85-014-02-VA	AS41-85-014-02-HA	T
B12 Pro-Kit (Performance Komplettfahrwerke | *Performance Springs+Shocks*)																
1.4 16V, 1.4 FSI, 1.6, 1.6 FSI, 1.6 MultiFuel	10.03 - 11.08	1010	1010	E90-85-014-01-22	A, 18, 20, 35, 58, 78, 122, 161			30	30					F11-15-007-01-VA	F11-85-014-05-HA	ABE
1.4 16V, 1.4 FSI, 1.6, 1.6 FSI, 1.6 MultiFuel	10.03 - 11.08	1010	1010	E90-85-014-02-22	A, 18, 20, 34, 58, 78, 125, 161			30	30					F11-15-007-01-VA	F11-85-014-05-HA	ABE
1.4 TSI, 1.6, 1.6 FSI, 1.6 MultiFuel, 1.9 TDI, 2.0, 2.0 FSI	10.03 - 11.08	1080	1010	E90-85-014-03-22	A, 18, 20, 35, 58, 78, 122, 161			30	30					F11-15-007-02-VA	F11-85-014-05-HA	ABE
1.4 TSI, 1.6, 1.6 FSI, 1.6 MultiFuel, 1.9 TDI, 2.0, 2.0 FSI	10.03 - 11.08	1080	1010	E90-85-014-04-22	A, 18, 20, 34, 58, 78, 125, 161			30	30					F11-15-007-02-VA	F11-85-014-05-HA	ABE
1.9 TDI, 2.0 SDI, 2.0 TDI, 2.0 TDI 16V	10.03 - 11.08	1150	1010	E90-85-014-05-22	A, 18, 20, 35, 58, 78, 122, 161			30	30					F11-15-007-03-VA	F11-85-014-05-HA	ABE
1.9 TDI, 2.0 SDI, 2.0 TDI, 2.0 TDI 16V	10.03 - 11.08	1150	1010	E90-85-014-06-22	A, 18, 20, 34, 58, 78, 125, 161			30	30					F11-15-007-03-VA	F11-85-014-05-HA	ABE
1.9 TDI 4motion, 2.0 FSI 4motion, 2.0 TDI, 2.0 TDI 16V 4motion, 2.0 TDI 4motion	08.04 - 11.08	1110	980	E90-85-014-19-22	A, 18, 35, 78, 122, 161			30	30					F11-15-007-02-VA	F11-85-014-05-HA	ABE
1.9 TDI 4motion, 2.0 FSI 4motion, 2.0 TDI, 2.0 TDI 16V 4motion, 2.0 TDI 4motion	08.04 - 11.08	1110	980	E90-85-014-20-22	A, 18, 34, 78, 125, 161			30	30					F11-15-007-02-VA	F11-85-014-05-HA	ABE
B12 Sportline (Performance Komplettfahrwerke Sport | *Sport Performance Springs+Shocks*)																
1.4, 1.4 FSI, 1.6, 1.6 FSI, 1.6 Multifuel, 2.0, 2.0 FSI	10.03 - 02.09	1040	930	E95-85-014-01-22	A, 18, 20, 35, 78, 122, 161			45-50	30-35					F21-15-007-01-VA	F21-85-014-01-HA	ABE
1.4, 1.4 FSI, 1.6, 1.6 FSI, 1.6 Multifuel, 2.0, 2.0 FSI	10.03 - 02.09	1040	930	E95-85-014-02-22	A, 18, 20, 34, 78, 124, 161			45-50	30-35					F21-15-007-01-VA	F21-85-014-01-HA	ABE
2.0 FSI, 1.9 TDI, 2.0 TDI, 2.0 TDI 16V	10.03 - 02.09	1130	930	E95-85-014-03-22	A, 18, 20, 35, 78, 122, 161			45-50	30-35					F21-15-007-02-VA	F21-85-014-01-HA	ABE
2.0 FSI, 1.9 TDI, 2.0 TDI, 2.0 TDI 16V	10.03 - 02.09	1130	930	E95-85-014-04-22	A, 18, 20, 34, 78, 125, 161			45-50	30-35					F21-15-007-02-VA	F21-85-014-01-HA	ABE
1.4 TSI, 1.8 GTI, 2.0 GTI	09.06 - 02.09	1040	930	E95-85-014-01-22	A, 18, 20, 35, 78, 123, 161			20-25	20					F21-15-007-01-VA	F21-85-014-01-HA	ABE
1.4 TSI, 1.8 GTI, 2.0 GTI	09.06 - 02.09	1040	930	E95-85-014-02-22	A, 18, 20, 34, 78, 126, 161			20-25	20					F21-15-007-01-VA	F21-85-014-01-HA	ABE
1.4 TSI, 1.8 GTI, 2.0 GTI, 2.0 TDI, 2.0 TDI 16V	10.04 - 02.09	1130	930	E95-85-014-03-22	A, 18, 20, 35, 78, 123, 161			20-25	20					F21-15-007-02-VA	F21-85-014-01-HA	ABE
1.4 TSI, 1.8 GTI, 2.0 GTI, 2.0 TDI, 2.0 TDI 16V	10.04 - 02.09	1130	930	E95-85-014-04-22	A, 18, 20, 34, 78, 126, 161			20-25	20					F21-15-007-02-VA	F21-85-014-01-HA	ABE
Pro-Street-S (Gewindefahrwerke - höhenverstellbar | *Coil-Overs-Adjustable Ride Hight*)																
1.4 16V, 1.4 FSI, 1.4 TSI, 1.6, 1.6 FSI, 1.6 MultiFuel, 1.8 GTI, 1.9 TDI, 2.0, 2.0 FSI, 2.0 SDI, 2.0 TDI, 2.0 TDI 16V	10.03 - 11.08	1035	1150	PSS65-85-014-01-22	A, 20, 24, 34, 45, 101, 160			35-65	35-65							T
1.4 16V, 1.4 FSI, 1.4 TSI, 1.6, 1.6 FSI, 1.6 MultiFuel, 1.8 GTI, 1.9 TDI, 2.0, 2.0 FSI, 2.0 SDI, 2.0 TDI, 2.0 TDI 16V	10.03 - 11.08	1035	1150	PSS65-85-014-02-22	A, 20, 24, 35, 45, 101, 160			35-65	35-65							T
1.4 16V, 1.4 FSI, 1.4 TSI, 1.6, 1.6 FSI, 1.6 MultiFuel, 1.8 GTI, 1.9 TDI, 2.0, 2.0 FSI, 2.0 SDI, 2.0 TDI, 2.0 TDI 16V	10.03 - 11.08	1105	1150	PSS65-85-014-03-22	A, 20, 24, 34, 45, 101, 160			35-65	35-65							T
1.4 16V, 1.4 FSI, 1.4 TSI, 1.6, 1.6 FSI, 1.6 MultiFuel, 1.8 GTI, 1.9 TDI, 2.0, 2.0 FSI, 2.0 SDI, 2.0 TDI, 2.0 TDI 16V	10.03 - 11.08	1105	1150	PSS65-85-014-04-22	A, 20, 24, 35, 45, 101, 160			35-65	35-65							T
1.9 TDI 4motion, 2.0 FSI 4motion, 2.0 TDI 16V 4motion, 2.0 TDI 4motion	08.04 - 11.08	1105	1150	PSS65-85-014-03-22	A, 24, 34, 45, 101, 160			35-65	30-55							T
1.9 TDI 4motion, 2.0 FSI 4motion, 2.0 TDI 16V 4motion, 2.0 TDI 4motion	08.04 - 11.08	1105	1150	PSS65-85-014-04-22	A, 24, 35, 45, 101, 160			35-65	30-55							T
2.0 GTI	09.06 - 12.08	1105	1150	PSS65-85-014-04-22	A, 20, 24, 35, 45, 160			20-45	10-35							T
1.8 GTI, 2.0 GTI	10.04 - 02.09	1105	1150	PSS65-85-014-03-22	A, 20, 24, 34, 45, 101, 160			20-45	10-35							T
2.0 GTI, 3.2 R32 4motion	10.04 - 02.09	1105	1150	PSS65-85-014-05-22	A, 24, 34, 45, 101, 160			20-45	10-35							T
1.8 GTI, 2.0 GTI	10.04 - 02.09	1105	1150	PSS65-85-014-04-22	A, 20, 24, 35, 45, 101, 160			20-45	10-35							T
2.0 GTI, 3.2 R32 4motion	10.04 - 02.09	1105	1150	PSS65-85-014-06-22	A, 24, 35, 45, 101, 160			20-45	10-35							T
3.2 R32 4motion	01.04 - 11.08	1110	1150	PSS65-85-014-05-22	A, 20, 24, 34, 45, 101, 160			20-45	10-35							T
3.2 R32 4motion	01.04 - 11.08	1110	1150	PSS65-85-014-06-22	A, 20, 24, 35, 45, 101, 160			20-45	10-35							T
1.4 16V, 1.4 FSI, 1.4 TSI, 1.6, 1.6 FSI, 1.6 MultiFuel, 1.8 GTI, 1.9 TDI, 2.0, 2.0 FSI, 2.0 SDI, 2.0 TDI, 2.0 TDI 16V	10.03 - 11.08	1170	1150	PSS65-85-014-05-22	A, 20, 24, 34, 45, 101, 160			35-65	35-65							T
1.4 16V, 1.4 FSI, 1.4 TSI, 1.6, 1.6 FSI, 1.6 MultiFuel, 1.8 GTI, 1.9 TDI, 2.0, 2.0 FSI, 2.0 SDI, 2.0 TDI, 2.0 TDI 16V	10.03 - 11.08	1170	1150	PSS65-85-014-06-22	A, 20, 24, 35, 45, 101, 160			35-65	35-65							T
1.9 TDI 4motion, 2.0 FSI 4motion, 2.0 TDI 16V 4motion, 2.0 TDI 4motion	08.04 - 11.08	1170	1150	PSS65-85-014-05-22	A, 24, 34, 45, 101, 160			35-65	30-55							T
1.9 TDI 4motion, 2.0 FSI 4motion, 2.0 TDI 16V 4motion, 2.0 TDI 4motion	08.04 - 11.08	1170	1150	PSS65-85-014-06-22	A, 24, 35, 45, 101, 160			35-65	30-55							T
GOLF V Variant (1K5)																
Pro-Kit (Performance Fahrwerksfedern | *Performance Springs*)																
1.6, 1.6 MultiFuel	06.07 -	1010	1010	E10-85-014-13-22	A, 18, 20			30	30					F11-15-007-01-VA	F11-15-007-01-HA	ABE
1.4 TSI, 1.6, 1.6 MultiFuel, 1.9 TDI	06.07 -	1080	1010	E10-85-014-14-22	A, 18, 20			30	30					F11-15-007-02-VA	F11-15-007-01-HA	ABE
1.9 TDI, 2.0 TDI, 2.0 TDI 16V	06.07 -	1150	1010	E10-85-014-15-22	A, 18, 20			30	30					F11-15-007-03-VA	F11-15-007-01-HA	ABE

VOLKSWAGEN

Modell	Baujahr	Achslast Vorne kg	Achslast Hinten kg	Artikel-Nr.	Hinweise	ab Nachtrag ...xx BE	bis Nachtrag ...xx BE	ca. Tieferl. Vorne mm	ca. Tieferl. Hinten mm	Ø Vorne mm	Ø Hinten mm	Verstellbarkeit Vorne	Verstellbarkeit Hinten	Ersatzteilbez. Vorne	Ersatzteilbez. Hinten	Gutachten
Model	*Year*	*Front Axle Load kg*	*Rear Axle Load kg*	*Part-No.*	*Notes*	*from suppl. ...xx of type approval*	*to suppl. ...xx of type approval*	*ca. Lowering Front mm*	*ca. Lowering Rear mm*	*Ø Front mm*	*Ø Rear mm*	*Adjustable Front*	*Adjustable Rear*	*Spare Part Marking Front*	*Spare Part Marking Rear*	*Homologation*
GOLF V Variant (1K5)																
Anti-Roll-Kit (Performance Stabilisatoren | *Performance Sway Bars*)																
1.9 TDI 4motion, 2.0 TDI 4motion	06.07 -			E40-85-014-08-11	A, 18, 22, 45					26 Rohr *26 tube*	22 Rohr *22 tube*	2-fach verstellbar *2-way adjustable*	2-fach verstellbar *2-way adjustable*	AS41-85-014-02-VA	AS41-85-014-02-HA	T
1.2 TSI, 1.4, 1.4 TSI, 1.6, 1.6 MultiFuel, 2.0 TSI, 2.0 GTI, 1.6 TDI, 2.0 TDI	10.03 - 02.09			E40-85-014-06-11	A, 18, 20, 22, 45					26	23	2-fach verstellbar *2-way adjustable*	2-fach verstellbar *2-way adjustable*	AS41-85-014-01-VA	AS41-85-014-01-HA	T
B12 Pro-Kit (Performance Komplettfahrwerke | *Performance Springs+Shocks*)																
1.6	06.07 -	1010	1010	E90-85-014-14-22	A, 18, 20, 34, 78, 124, 161			30	30					F11-15-007-01-VA	F11-15-007-01-HA	ABE
1.6	06.07 -	1010	1010	E90-85-014-13-22	A, 18, 20, 35, 78, 122, 161			30	30					F11-15-007-01-VA	F11-15-007-01-HA	ABE
1.4 TSI, 1.6, 1.9 TDI	06.07 -	1080	1010	E90-85-014-16-22	A, 18, 20, 34, 78, 124, 161			30	30					F11-15-007-02-VA	F11-15-007-01-HA	ABE
1.4 TSI, 1.6, 1.9 TDI	06.07 -	1080	1010	E90-85-014-15-22	A, 18, 20, 35, 78, 122, 161			30	30					F11-15-007-02-VA	F11-15-007-01-HA	ABE
1.9 TDI mit DSG *1.9 TDI with DSG*	06.07 -	1150	1010	E90-85-014-18-22	A, 18, 20, 34, 78, 107, 124, 161			30	30					F11-15-007-03-VA	F11-15-007-01-HA	ABE
1.9 TDI mit DSG *1.9 TDI with DSG*	06.07 -	1150	1010	E90-85-014-17-22	A, 18, 20, 35, 78, 107, 122, 161			30	30					F11-15-007-03-VA	F11-15-007-01-HA	ABE
2.0 TDI, 2.0 TDI 16V	06.07 -	1150	1010	E90-85-014-17-22	A, 18, 20, 35, 78, 122, 161			30	30					F11-15-007-03-VA	F11-15-007-01-HA	ABE
2.0 TDI, 2.0 TDI 16V	06.07 -	1150	1010	E90-85-014-18-22	A, 18, 20, 35, 78, 122, 161			30	30					F11-15-007-03-VA	F11-15-007-01-HA	ABE
Pro-Street-S (Gewindefahrwerke - höhenverstellbar | *Coil-Overs-Adjustable Ride Hight*)																
1.4, 1.4 TSI, 1.6, 1.6 MultiFuel, 1.9 TDI, 2.0, 2.0 TDI, 2.0 TDI 16V	06.07 -	1035	1150	PSS65-85-014-01-22	A, 20, 24, 34, 45, 101, 160			35-65	35-65							T
1.4, 1.4 TSI, 1.6, 1.6 MultiFuel, 1.9 TDI, 2.0, 2.0 TDI, 2.0 TDI 16V	06.07 -	1035	1150	PSS65-85-014-02-22	A, 20, 24, 35, 45, 101, 160			35-65	35-65							T
1.4, 1.4 TSI, 1.6, 1.6 MultiFuel, 1.9 TDI, 2.0, 2.0 TDI, 2.0 TDI 16V	06.07 -	1105	1150	PSS65-85-014-03-22	A, 20, 24, 34, 45, 101, 160			35-65	35-65							T
1.4, 1.4 TSI, 1.6, 1.6 MultiFuel, 1.9 TDI, 2.0, 2.0 TDI, 2.0 TDI 16V	06.07 -	1105	1150	PSS65-85-014-04-22	A, 20, 24, 35, 45, 101, 160			35-65	35-65							T
1.4, 1.4 TSI, 1.6, 1.6 MultiFuel, 1.9 TDI, 2.0, 2.0 TDI, 2.0 TDI 16V	06.07 -	1170	1150	PSS65-85-014-05-22	A, 24, 34, 45, 101, 160			35-65	35-65							T
1.4, 1.4 TSI, 1.6, 1.6 MultiFuel, 1.9 TDI, 2.0, 2.0 TDI, 2.0 TDI 16V	06.07 -	1170	1150	PSS65-85-014-06-22	A, 24, 35, 45, 101, 160			35-65	35-65							T
GOLF VI (5K1)																
Pro-Kit (Performance Fahrwerksfedern | *Performance Springs*)																
1.2 TSI, 1.4, 1.4 TSI, 1.6, 1.6 MultiFuel, 1.6 TDI, 1.8 TSI, 2.0 TDI	10.08 - 05.13	1010	940	E10-85-022-01-22	A, 18, 20			30	30					F11-15-007-01-VA	F11-85-022-01-HA	ABE
1.4 TSI mit DSG, 1.6 TDI mit DSG, 1.8 TSI mit DSG, 2.0 TDI *1.4 TSI with DSG, 1.6 TDI with DSG, 1.8 TSI with DSG, 2.0 TDI*	10.08 - 05.13	1120	940	E10-85-022-02-22	A, 18, 20			30	30					F11-15-007-02-VA	F11-85-022-01-HA	ABE
Sportline (Performance Fahrwerksfedern Sport | *Sport Performance Springs*)																
1.2 TSI, 1.4, 1.4 TSI, 1.8 TSI, 1.6, 1.6 TDI, 2.0 TDI, 2.0 TDI 16V	10.08 -	1040	930	E20-85-014-01-22	A, 18, 20			45-50	30-35					F21-15-007-01-VA	F21-85-014-01-HA	ABE
2.0 GTi	10.08 -	1040	930	E20-85-014-01-22	A, 18, 20			20-25	20					F21-15-007-01-VA	F21-85-014-01-HA	ABE
1.4 TSI, 1.8 TSI, 1.6 TDI, 2.0 TDI, 2.0 TDI 16V	10.08 -	1130	930	E20-85-014-02-22	A, 18, 20			45-50	30-35					F21-15-007-02-VA	F21-85-014-01-HA	ABE
2.0 GTI, 2.0 TDI, 2.0 TDI 16V	04.09 -	1130	930	E20-85-014-02-22	A, 18, 20			20-25	20					F21-15-007-02-VA	F21-85-014-01-HA	ABE
Anti-Roll-Kit (Performance Stabilisatoren | *Performance Sway Bars*)																
1.2 TSI, 1.4, 1.4 TSI, 1.6, 1.6 MultiFuel, 1.6 TDI, 2.0 GTi, 2.0 TDI	10.08 -			E40-85-014-06-11	A, 18, 20, 22, 45					26	23	2-fach verstellbar *2-way adjustable*	2-fach verstellbar *2-way adjustable*	AS41-85-014-01-VA	AS41-85-014-01-HA	T
2.0 R 4motion, 2.0 TDI 4motion	10.08 -			E40-85-014-08-11	A, 18, 22, 45					26 Rohr *26 tube*	22 Rohr *22 tube*	2-fach verstellbar *2-way adjustable*	2-fach verstellbar *2-way adjustable*	AS41-85-014-02-VA	AS41-85-014-02-HA	T
Pro-Tronic (Elektronische Performance Fahrwerksmodule | *Electronic Performance Suspension Moduls*)																
Alle Motorisierungen / *all motorisation*	10.08 -			AM65-85-022-01-22	A, 175											
B12 Pro-Kit (Performance Komplettfahrwerke | *Performance Springs+Shocks*)																
1.2 TSI, 1.4, 1.4 TSI, 1.6, 1.6 TDI, 2.0 TDI, 2.0 TDI 16V	10.08 - 05.13	1010	940	E90-85-022-01-22	A, 18, 20, 21, 35, 78, 101, 122, 161			30	30					F11-15-007-01-VA	F11-85-022-01-HA	ABE
1.2 TSI, 1.4, 1.4 TSI, 1.6, 1.6 TDI, 2.0 TDI, 2.0 TDI 16V	10.08 - 05.13	1010	940	E90-85-022-02-22	A, 18, 20, 21, 34, 78, 101, 125, 161			30	30					F11-15-007-01-VA	F11-85-022-01-HA	ABE
1.4 TSI, 1.8 TSI, 1.6 TDI, 2.0 TDI, 2.0 TDI 16V	10.08 - 05.13	1120	940	E90-85-022-03-22	A, 18, 20, 21, 35, 78, 101, 122, 161			30	30					F11-15-007-02-VA	F11-85-022-01-HA	ABE
1.4 TSI, 1.8 TSI, 1.6 TDI, 2.0 TDI, 2.0 TDI 16V	10.08 - 05.13	1120	940	E90-85-022-04-22	A, 18, 20, 21, 34, 78, 101, 125, 161			30	30					F11-15-007-02-VA	F11-85-022-01-HA	ABE
B12 Sportline (Performance Komplettfahrwerke Sport | *Sport Performance Springs+Shocks*)																
1.2 TSI, 1.4, 1.4 TSI, 1.8 TSI, 1.6, 1.6 TDI, 2.0 TDI, 2.0 TDI 16V	02.09 -	1040	930	E95-85-022-01-22	A, 18, 20, 21, 35, 78, 101, 122, 161			45-50	30-35					F21-15-007-01-VA	F21-85-014-01-HA	ABE
1.2 TSI, 1.4, 1.4 TSI, 1.8 TSI, 1.6, 1.6 TDI, 2.0 TDI, 2.0 TDI 16V	02.09 -	1040	930	E95-85-022-02-22	A, 18, 20, 21, 34, 78, 101, 125, 161			45-50	30-35					F21-15-007-01-VA	F21-85-014-01-HA	ABE
1.4 TSI, 1.8 TSI, 1.6 TDI, 2.0 TDI, 2.0 TDI 16V	10.08 -	1130	930	E95-85-022-03-22	A, 18, 20, 21, 35, 78, 101, 122, 161			45-50	30-35					F21-15-007-02-VA	F21-85-014-01-HA	ABE
1.4 TSI, 1.8 TSI, 1.6 TDI, 2.0 TDI, 2.0 TDI 16V	10.08 -	1130	930	E95-85-022-04-22	A, 18, 20, 21, 34, 78, 101, 125, 161			45-50	30-35					F21-15-007-02-VA	F21-85-014-01-HA	ABE
2.0 GTI	02.09 -	1040	930	E95-85-022-01-22	A, 18, 20, 21, 35, 78, 101, 122, 161			20-25	20					F21-15-007-01-VA	F21-85-014-01-HA	ABE
2.0 GTI	02.09 -	1040	930	E95-85-022-02-22	A, 18, 20, 21, 34, 78, 101, 125, 161			20-25	20					F21-15-007-01-VA	F21-85-014-01-HA	ABE
2.0 GTI	10.08 -	1130	930	E95-85-022-03-22	A, 18, 20, 21, 35, 78, 101, 122, 161			20-25	20					F21-15-007-02-VA	F21-85-014-01-HA	ABE
2.0 GTI	10.08 -	1130	930	E95-85-022-04-22	A, 18, 20, 21, 34, 78, 101, 125, 161			20-25	20					F21-15-007-02-VA	F21-85-014-01-HA	ABE

VOLKSWAGEN

Modell *Model*	Baujahr *Year*	Achslast Vorne kg *Front Axle Load kg*	Achslast Hinten kg *Rear Axle Load kg*	Artikel-Nr. *Part-No.*	Hinweise *Notes*	ab Nachtrag ...xx BE *from suppl. ...xx of type approval*	bis Nachtrag ...xx BE *to suppl. ...xx of type approval*	ca. Tieferl. Vorne mm *ca. Lowering Front mm*	ca. Tieferl. Hinten mm *ca. Lowering Rear mm*	Ø Vorne mm *Ø Front mm*	Ø Hinten mm *Ø Rear mm*	Verstellbarkeit Vorne *Adjustable Front*	Verstellbarkeit Hinten *Adjustable Rear*	Ersatzteilbez. Vorne *Spare Part Marking Front*	Ersatzteilbez. Hinten *Spare Part Marking Rear*	Gutachten *Homologation*
GOLF VI (5K1)																
Pro-Street-S (Gewindefahrwerke - höhenverstellbar | *Coil-Overs-Adjustable Ride Hight*)																
1.4, 1.4 TSI, 1.6, 1.6 Multifuel, 1.6 TDI, 1.6 TDI Blue Motion, 1.8 TSI, 2.0 TDI, 2.0 TDI 16V, 2.0 GTI	10.08 -	1035	1000	PSS65-81-009-01-22	A, 18, 20, 24, 34, 45, 160			30-60	25-55							T
1.4, 1.4 TSI, 1.6, 1.6 Multifuel, 1.6 TDI, 1.8 TSI, 2.0 TDI, 2.0 TDI 16V, 2.0 GTI	10.08 -	1035	1000	PSS65-81-009-04-22	A, 18, 20, 24, 35, 45, 160			30-60	25-55							T
1.4, 1.4 TSI, 1.6, 1.6 Multifuel, 1.6 TDI, 1.6 TDI Blue Motion, 1.8 TSI, 2.0 TDI, 2.0 TDI 16V	10.08 -	1105	1000	PSS65-81-009-02-22	A, 18, 20, 24, 34, 45, 160			30-60	25-55							T
1.4, 1.4 TSI, 1.6, 1.6 Multifuel, 1.6 TDI, 1.8 TSI, 2.0 TDI, 2.0 TDI 16V, 2.0 GTI, 2.0 TDI, 2.0 TDI 16V	10.08 -	1105	1000	PSS65-81-009-05-22	A, 18, 20, 24, 35, 45, 160			30-60	25-55							T
2.0 R 4motion	10.08 -	1110	1150	PSS65-85-014-05-22	A, 24, 34, 45, 101, 160			5-35	5-35							T
2.0 R 4motion	10.08 -	1110	1150	PSS65-85-014-06-22	A, 24, 35, 45, 101, 160			5-35	5-35							T
1.4, 1.4 TSI, 1.6, 1.6 Multifuel, 1.8 TSI, 2.0 TDI, 2.0 TDI 16V, 2.0 GTI, 2.0 TDI, 2.0 TDI 16V	10.08 -	1170	1000	PSS65-81-009-03-22	A, 18, 20, 24, 34, 45, 160			30-60	25-55							T
1.4, 1.4 TSI, 1.6, 1.6 Multifuel, 1.8 TSI, 2.0 TDI, 2.0 TDI 16V, 2.0 GTI, 2.0 TDI, 2.0 TDI 16V	10.08 -	1170	1000	PSS65-81-009-06-22	A, 18, 20, 24, 35, 45, 160			30-60	25-55							T
GOLF VI Cabriolet (517) ***GOLF VI Convertible (517)***																
Pro-Kit (Performance Fahrwerksfedern | *Performance Springs*)																
1.2 TSI, 1.4 TSI	03.11 -	1010	1000	E10-85-022-03-22	A, 18, 20			25	20					F11-15-007-01-VA	F11-15-007-01-HA	ABE
1.4 TSI, 1.6 TDI, 2.0 TDI	03.11 -	1120	1000	E10-85-022-04-22	A, 18, 20			25	20					F11-15-007-02-VA	F11-15-007-01-HA	ABE
Sportline (Performance Fahrwerksfedern Sport | *Sport Performance Springs*)																
1.2 TSI, 1.4 TSI, 2.0 TDI	03.11 -	1040	1005	E20-15-007-03-22	A, 18, 20			35	30					F21-15-007-01-VA	F21-15-007-03-HA	ABE
1.4 TSI, 1.6 TDI, 2.0 TDI	03.11 -	1130	1005	E20-15-007-04-22	A, 18, 20			35	30					F21-15-007-02-VA	F21-15-007-03-HA	ABE
2.0 TSI	11.11 -	1130	1005	E20-15-007-04-22	A, 18, 20			25	15					F21-15-007-02-VA	F21-15-007-03-HA	ABE
Anti-Roll-Kit (Performance Stabilisatoren | *Performance Sway Bars*)																
1.2 TSI, 1.4 TSI, 1.6 TDI, 2.0 TDI, 2.0 TSI	03.11 -			E40-85-014-06-11	A, 18, 20, 22, 45					26	23	2-fach verstellbar *2-way adjustable*	2-fach verstellbar *2-way adjustable*	AS41-85-014-01-VA	AS41-85-014-01-HA	T
Pro-Tronic (Elektronische Performance Fahrwerksmodule | *Electronic Performance Suspension Moduls*)																
Alle Motorisierungen / *all motorisation*	03.11 -			AM65-85-022-01-22	A, 175											
B12 Pro-Kit (Performance Komplettfahrwerke | *Performance Springs+Shocks*)																
1.2 TSI	03.11 -	1010	1000	E90-85-022-06-22	A, 18, 20, 21, 34, 78, 101, 125, 161			25	20					F11-15-007-01-VA	F11-15-007-01-HA	ABE
1.2 TSI	03.11 -	1010	1000	E90-85-022-05-22	A, 18, 20, 21, 35, 78, 101, 122, 161			25	20					F11-15-007-01-VA	F11-15-007-01-HA	ABE
1.4 TSI, 1.6 TDI, 2.0 TDI, 2.0 TSI	03.11 -	1120	1000	E90-85-022-08-22	A, 18, 20, 21, 34, 78, 101, 125, 161			25	20					F11-15-007-02-VA	F11-15-007-01-HA	ABE
1.4 TSI, 1.6 TDI, 2.0 TDI, 2.0 TSI	03.11 -	1130	1000	E90-85-022-07-22	A, 18, 20, 21, 35, 78, 101, 122, 161			25	20					F11-15-007-02-VA	F11-15-007-01-HA	ABE
B12 Sportline (Performance Komplettfahrwerke Sport | *Sport Performance Springs+Shocks*)																
1.2 TSI, 1.4 TSI, 1.6 TDI, 2.0 TDI, 2.0 TSI	03.11 -	1130	1005	E95-15-007-08-22	A, 18, 20, 34, 78, 125, 161			35	30					F21-15-007-02-VA	F21-15-007-03-HA	ABE
1.2 TSI, 1.4 TSI, 1.6 TDI, 2.0 TDI, 2.0 TSI	03.11 -	1040	1005	E95-15-007-07-22	A, 18, 20, 35, 78, 122, 161			35	30					F21-15-007-02-VA	F21-15-007-03-HA	ABE
GOLF VI Variant (AJ5)																
Pro-Kit (Performance Fahrwerksfedern | *Performance Springs*)																
1.2 TSI, 1.4, 1.4 TSI, 1.6, 1.6 MultiFuel, 1.6 TDI	07.09 -	1010	1000	E10-85-022-03-22	A, 18, 20			25-30	30					F11-15-007-01-VA	F11-15-007-01-HA	ABE
1.4 TSI, 1.6 TDI, 2.0 TDI, 2.0 TDI 16V, 2.0 TSI	07.09 -	1120	1000	E10-85-022-04-22	A, 18, 20			25-30	30					F11-15-007-02-VA	F11-15-007-01-HA	ABE
Anti-Roll-Kit (Performance Stabilisatoren | *Performance Sway Bars*)																
1.2 TSI, 1.4, 1.4 TSI, 1.6, 1.6 MultiFuel, 1.6 TDI, 2.0 TDI, 2.0 TDI 16V, 2.0 TSI	07.09 -			E40-85-014-06-11	A, 18, 20, 22, 45					26	23	2-fach verstellbar *2-way adjustable*	2-fach verstellbar *2-way adjustable*	AS41-85-014-01-VA	AS41-85-014-01-HA	T
1.6 TDI 4motion	07.09 -			E40-85-014-08-11	A, 18, 22, 45					26 Rohr *26 tube*	22 Rohr *22 tube*	2-fach verstellbar *2-way adjustable*	2-fach verstellbar *2-way adjustable*	AS41-85-014-02-VA	AS41-85-014-02-HA	T
Pro-Tronic (Elektronische Performance Fahrwerksmodule | *Electronic Performance Suspension Moduls*)																
Alle Motorisierungen / *all motorisation*	07.09 -			AM65-85-022-01-22	A, 175											
B12 Pro-Kit (Performance Komplettfahrwerke | *Performance Springs+Shocks*)																
1.2 TSI, 1.4, 1.4 TSI, 1.6, 1.6 MultiFuel, 1.6 TDI	07.09 -	1010	1000	E90-85-022-06-22	A, 18, 20, 21, 34, 78, 101, 125, 161			25-30	30					F11-15-007-01-VA	F11-15-007-01-HA	ABE
1.2 TSI, 1.4, 1.4 TSI, 1.6, 1.6 MultiFuel, 1.6 TDI	07.09 -	1010	1000	E90-85-022-05-22	A, 18, 20, 21, 35, 78, 101, 122, 161			25-30	30					F11-15-007-01-VA	F11-15-007-01-HA	ABE
1.4 TSI, 1.6 TDI, 2.0 TDI, 2.0 TDI 16V	07.09 -	1120	1000	E90-85-022-08-22	A, 18, 20, 21, 34, 78, 101, 125, 161			25-30	30					F11-15-007-02-VA	F11-15-007-01-HA	ABE
1.4 TSI, 1.6 TDI, 2.0 TDI, 2.0 TDI 16V	07.09 -	1120	1000	E90-85-022-07-22	A, 18, 20, 21, 35, 78, 101, 122, 161			25-30	30					F11-15-007-02-VA	F11-15-007-01-HA	ABE
GOLF VII (5G1)																
Pro-Kit (Performance Fahrwerksfedern | *Performance Springs*)																
1.0 TSI, 1.2 TSI, 1.4 TSI, 1.4 TSI MultiFuel, 1.6	11.12 -	985	990	E10-15-021-03-22	A, 18, 20, 171			35	30					F11-15-021-01-VA	F1540002	ABE
1.0 TSI, 1.2 TSI, 1.4 TSI, 1.4 TSI MultiFuel, 1.6	11.12 -	985	1000	E10-15-021-01-22	A, 18, 20, 170			35	30					F11-15-021-01-VA	F11-15-021-01-HA	ABE
1.6 TDI, 2.0 TDI	08.12 -	1070	990	E10-15-021-04-22	A, 18, 20, 171			35	30					F11-15-021-02-VA	F1540002	ABE
1.6 TDI, 2.0 TDI	08.12 -	1070	1000	E10-15-021-02-22	A, 18, 20, 170			35	30					F11-15-021-02-VA	F11-15-021-01-HA	ABE
2.0 TSI, 2.0 GTI, 2.0 GTD	11.12 -	1070	1000	E10-15-021-02-22	A, 18, 20, 170			25-30	15-20					F11-15-021-02-VA	F11-15-021-01-HA	ABE
2.0 R 4motion	11.13 -	1100	960	E10-85-041-01-22	A, 18, 170			10-15	10-15					F11-85-041-01-VA	F11-15-021-05-HA	ABE
e-Golf	02.14 -	1070	1220	E10-85-041-04-22	A, 18, 20			30	20					F11-15-021-02-VA	F11-15-007-04-HA	ABE
1.4 GTE Hybrid	05.14 -	1100	1220	E10-85-021-15-22	A, 18, 20			40	35					F11-85-041-01-VA	F11-15-007-04-HA	ABE

VOLKSWAGEN

Modell	Baujahr	Achslast Vorne kg	Achslast Hinten kg	Artikel-Nr.	Hinweise	ab Nachtrag ...xx BE	bis Nachtrag ...xx BE	ca. Tieferl. Vorne mm	ca. Tieferl. Hinten mm	Ø Vorne mm	Ø Hinten mm	Verstellbarkeit Vorne	Verstellbarkeit Hinten	Ersatzteilbez. Vorne	Ersatzteilbez. Hinten	Gutachten
Model	*Year*	*Front Axle Load kg*	*Rear Axle Load kg*	*Part-No.*	*Notes*	*from suppl. ...xx of type approval*	*to suppl. ...xx of type approval*	*ca. Lowering Front mm*	*ca. Lowering Rear mm*	*Ø Front mm*	*Ø Rear mm*	*Adjustable Front*	*Adjustable Rear*	*Spare Part Marking Front*	*Spare Part Marking Rear*	*Homologation*
GOLF VII (5G1)																
Anti-Roll-Kit (Performance Stabilisatoren | *Performance Sway Bars*)																
1.4 TSI, 1.4 TSI MultiFuel, 1.6, 1.6 TDI, 2.0 TDI, 2.0 TSI, 2.0 GTI, 2,0 GTD	11.12 -			E40-15-021-01-11	A, 18, 20, 22, 45, 170					28 Rohr *28 tube*	25 Rohr *25 tube*	2-fach verstellbar *2-way adjustable*	nicht verstellbar *not adjustable*	AS41-15-021-01-VA	AS41-15-021-01-HA	T
1.6 TDI 4motion, 2.0 TDI 4motion, 2.0 R 4motion	11.12 -			E40-15-021-02-11	A, 18, 22, 45, 170					28 Rohr *28 tube*	25 Rohr *25 tube*	2-fach verstellbar *2-way adjustable*	2-fach verstellbar *2-way adjustable*	AS41-15-021-02-VA	AS41-15-021-02-HA	T
1.0 TSI, 1.2 TSI, 1.4 TSI, 1.4 TSI MultiFuel, 1.6	11.12 -			E40-15-021-03-11	A, 18, 20, 22, 45, 171					28 Rohr *28 tube*	25	2-fach verstellbar *2-way adjustable*	nicht verstellbar *not adjustable*	AS41-15-021-01-VA	AS41-15-021-03-HA	T
Pro-Tronic (Elektronische Performance Fahrwerksmodule | *Electronic Performance Suspension Moduls*)																
Alle Motorisierungen / *all motorisation*	11.12 -			AM65-15-021-01-22	A, 175											
B12 Pro-Kit (Performance Komplettfahrwerke | *Performance Springs+Shocks*)																
1.0 TSI, 1.2 TSI, 1.4 TSI, 1.4 TSI MultiFuel, 1.6	11.12 -	985	1000	E90-15-021-01-22	A, 18, 20, 35, 78, 161, 170, 188			35	30					F11-15-021-01-VA	F11-15-021-01-HA	ABE
1.6 TDI, 2.0 TDI	11.12 -	1070	1000	E90-15-021-02-22	A, 18, 20, 35, 78, 161, 170, 188			35	30					F11-15-021-02-VA	F11-15-021-01-HA	ABE
2.0 TSI, 2.0 GTI, 2.0 GTD	11.12 -	1070	1000	E90-15-021-02-22	A, 18, 20, 35, 78, 161, 170, 188			25-30	15-20					F11-15-021-02-VA	F11-15-021-01-HA	ABE
1.0 TSI, 1.2 TSI, 1.4 TSI, 1.4 TSI MultiFuel, 1.6	11.12 -	985	990	E90-15-021-03-22	A, 18, 20, 35, 78, 161, 171, 189			35	30					F11-15-021-01-VA	F1540002	ABE
1.6 TDI, 2.0 TDI	11.12 -	1070	990	E90-15-021-04-22	A, 18, 20, 35, 78, 161, 171, 189			35	30					F11-15-021-02-VA	F1540002	ABE
1.0 TSI, 1.2 TSI, 1.4 TSI, 1.4 TSI MultiFuel, 1.6	11.12 -	985	1000	E90-15-021-15-22	A, 18, 20, 34, 78, 161, 170, 190			35	30					F21-15-021-01-VA	F21-15-021-01-HA	ABE
1.6 TDI, 2.0 TDI	11.12 -	1070	1000	E90-15-021-16-22	A, 18, 20, 34, 78, 161, 170, 190			35	30					F11-15-021-02-VA	F11-15-021-01-HA	ABE
2.0 TSI, 2.0 GTI, 2.0 GTD	11.12 -	1070	1000	E90-15-021-16-22	A, 18, 20, 34, 78, 161, 170, 190			25-30	15-20					F11-15-021-02-VA	F11-15-021-01-HA	ABE
1.0 TSI, 1.2 TSI, 1.4 TSI, 1.4 TSI MultiFuel, 1.6	11.12 -	985	990	E90-15-021-17-22	A, 18, 20, 34, 78, 161, 171, 191			35	30					F11-15-021-01-VA	F1540002	ABE
1.6 TDI, 2.0 TDI	11.12 -	1070	990	E90-15-021-18-22	A, 18, 20, 34, 78, 161, 171, 191			35	30					F11-15-021-02-VA	F1540002	ABE
Pro-Street-S (Gewindefahrwerke - höhenverstellbar | *Coil-Overs-Adjustable Ride Hight*)																
1.0 TSI, 1.2 TSI, 1.4 TSI, 1.4 TSI MultiFuel, 1.6	11.12 -	965	980	PSS65-15-021-07-22	A, 24, 25, 35, 45, 160, 171			35-65	35-65							T
1.6 TDI, 2.0 TDI	11.12 -	1060	980	PSS65-15-021-08-22	A, 24, 25, 35, 45, 160, 171			35-65	35-65							T
1.0 TSI, 1.2 TSI, 1.4 TSI, 1.4 TSI MultiFuel, 1.6	11.12 -	965	980	PSS65-15-021-09-22	A, 24, 25, 35, 45, 160, 170			35-65	35-65							T
1.6 TDI, 2.0 TDI	11.12 -	1080	980	PSS65-15-021-10-22	A, 24, 25, 35, 45, 160, 170			35-65	35-65							T
1.6 TDI, 2.0 TDI	11.12 -	1080	980	PSS65-15-021-11-22	A, 24, 25, 34, 45, 160, 170			35-65	35-65							T
2.0 TSI, 2.0 TSI GTI, 2.0 GTD	11.12 -	1080	980	PSS65-15-021-11-22	A, 24, 25, 34, 45, 160, 170			25-55	20-45							T
2.0 R 4motion	11.13 -	1080	980	PSS65-15-021-11-22	A, 24, 25, 34, 45, 160, 170			10-40	20-45							T
GOLF VII Variant (BA5)																
Pro-Kit (Performance Fahrwerksfedern | *Performance Springs*)																
1.0 TSI, 1.2 TSI, 1.4 TSI, 1.4 TSI MultiFuel, 1.6	04.13 -	985	1075	E10-79-010-01-22	A, 18, 20, 170			30	30					F11-15-021-01-VA	F11-15-007-15-HA	ABE
1.6 TDI, 2.0 TDI	04.13 -	1070	1075	E10-79-010-02-22	A, 18, 20, 170			30	30					F11-15-021-02-VA	F11-15-007-15-HA	ABE
2.0 GTD	01.15 -	1070	1075	E10-79-010-02-22	A, 18, 20, 170			15	15					F11-15-021-02-VA	F11-15-007-15-HA	ABE
1.0 TSI, 1.2 TSI, 1.4 TSI, 1.4 TSI MultiFuel, 1.6	04.13 -	985	1030	E10-79-010-03-22	A, 18, 20, 171			30	30					F11-15-021-01-VA	F11-70-012-01-HA	ABE
1.6 TDI, 2.0 TDI	04.13 -	1070	1030	E10-79-010-04-22	A, 18, 20, 171			30	30					F11-15-021-02-VA	F11-70-012-01-HA	ABE
2.0 R 4motion	11.13 -	1100	1075	E10-85-041-05-22	A, 18, 170			10-15	10-15					F11-85-041-01-VA	F11-15-007-15-HA	T
Anti-Roll-Kit (Performance Stabilisatoren | *Performance Sway Bars*)																
1.4 TSI, 1.6 TDI, 2.0 TDI	04.13 -			E40-15-021-01-11	A, 18, 20, 22, 45, 170					28 Rohr *28 tube*	25 Rohr *25 tube*	2-fach verstellbar *2-way adjustable*	nicht verstellbar *not adjustable*	AS41-15-021-01-VA	AS41-15-021-01-HA	T
1.6 TDI 4motion, 2.0 TDI 4motion	04.13 -			E40-15-021-02-11	A, 18, 22, 45, 170					28 Rohr *28 tube*	25 Rohr *25 tube*	2-fach verstellbar *2-way adjustable*	2-fach verstellbar *2-way adjustable*	AS41-15-021-02-VA	AS41-15-021-02-HA	T
1.0 TSI, 1.2 TSI, 1.4 TSI, 1.4 TSI MultiFuel, 1.6	04.13 -			E40-15-021-03-11	A, 18, 20, 22, 45, 171					28 Rohr *28 tube*	25	2-fach verstellbar *2-way adjustable*	nicht verstellbar *not adjustable*	AS41-15-021-01-VA	AS41-15-021-03-HA	T
2.0 R 4motion	04.13 -			E40-15-021-02-11	A, 18, 22, 45, 170					28 Rohr *28 tube*	25 Rohr *25 tube*	2-fach verstellbar *2-way adjustable*	2-fach verstellbar *2-way adjustable*	AS41-15-021-02-VA	AS41-15-021-02-HA	T
Pro-Tronic (Elektronische Performance Fahrwerksmodule | *Electronic Performance Suspension Moduls*)																
Alle Motorisierungen / *all motorisation*	04.13 -			AM65-15-021-01-22	A, 175											
B12 Pro-Kit (Performance Komplettfahrwerke | *Performance Springs+Shocks*)																
1.0 TSI, 1.2 TSI, 1.4 TSI, 1.4 TSI MultiFuel, 1.6	04.13 -	985	1075	E90-79-010-01-22	A, 18, 20, 35, 78, 161, 170, 207			30	30					F11-15-021-01-VA	F11-15-007-15-HA	ABE
1.6 TDI, 2.0 TDI	04.13 -	1070	1075	E90-79-010-02-22	A, 18, 20, 35, 78, 161, 170, 207			30-40	30					F11-15-021-02-VA	F11-15-007-15-HA	ABE
2.0 GTD	01.15 -	1070	1075	E90-79-010-02-22	A, 18, 20, 35, 78, 161, 170, 207			15	15					F11-15-021-02-VA	F11-15-007-15-HA	ABE
1.0 TSI, 1.2 TSI, 1.4 TSI, 1.4 TSI MultiFuel, 1.6	04.13 -	985	1030	E90-79-010-03-22	A, 18, 20, 35, 78, 161, 171, 206			30-40	30					F11-15-021-01-VA	F11-70-012-01-HA	ABE
1.6 TDI, 2.0 TDI	04.13 -	1070	1030	E90-79-010-04-22	A, 18, 20, 35, 78, 161, 171, 206			30-40	30					F11-15-021-02-VA	F11-70-012-01-HA	ABE

VOLKSWAGEN

Modell	Baujahr	Achslast Vorne kg	Achslast Hinten kg	Artikel-Nr.	Hinweise	ab Nachtrag ...xx BE	bis Nachtrag ...xx BE	ca. Tieferl. Vorne mm	ca. Tieferl. Hinten mm	Ø Vorne mm	Ø Hinten mm	Verstellbarkeit Vorne	Verstellbarkeit Hinten	Ersatzteilbez. Vorne	Ersatzteilbez. Hinten	Gutachten
Model	*Year*	*Front Axle Load kg*	*Rear Axle Load kg*	*Part-No.*	*Notes*	*from suppl. ...xx of type approval*	*to suppl. ...xx of type approval*	*ca. Lowering Front mm*	*ca. Lowering Rear mm*	*Ø Front mm*	*Ø Rear mm*	*Adjustable Front*	*Adjustable Rear*	*Spare Part Marking Front*	*Spare Part Marking Rear*	*Homologation*
GOLF VII Variant (BA5)																
B12 Pro-Kit (Performance Komplettfahrwerke | *Performance Springs+Shocks*)																
1.0 TSI, 1.2 TSI, 1.4 TSI, 1.4 TSI MultiFuel, 1.6	04.13 -	985	1075	E90-79-010-05-22	A, 18, 20, 34, 78, 161, 170, 209			30-40	30					F11-15-021-01-VA	F11-15-007-15-HA	ABE
1.6 TDI, 2.0 TDI	04.13 -	1070	1075	E90-79-010-06-22	A, 18, 20, 34, 78, 161, 170, 209			30-40	30					F11-15-021-02-VA	F11-15-007-15-HA	ABE
2.0 GTD	01.15 -	1070	1075	E90-79-010-06-22	A, 18, 20, 34, 78, 161, 170, 209			15	15					F11-15-021-02-VA	F11-15-007-15-HA	ABE
1.0 TSI, 1.2 TSI, 1.4 TSI, 1.4 TSI MultiFuel, 1.6	04.13 -	985	1030	E90-79-010-07-22	A, 18, 20, 34, 78, 161, 171, 208			30-40	30					F11-15-021-01-VA	F11-70-012-01-HA	ABE
1.6 TDI, 2.0 TDI	04.13 -	1070	1030	E90-79-010-08-22	A, 18, 20, 34, 78, 161, 171, 208			30-40	30					F11-15-021-02-VA	F11-70-012-01-HA	ABE
Pro-Street-S (Gewindefahrwerke - höhenverstellbar | *Coil-Overs-Adjustable Ride Hight*)																
1.0 TSI, 1.2 TSI, 1.4 TSI, 1.4 TSI MultiFuel, 1.6	04.13 -	925	1050	PSS65-15-021-12-22	A, 24, 25, 34, 45, 160, 170			35-65	35-65							T
1.6 TDI, 2.0 TDI	04.13 -	1090	1050	PSS65-15-021-13-22	A, 24, 25, 34, 45, 160, 170			35-65	35-65							T
2.0 GTD	01.15 -	1090	1050	PSS65-15-021-13-22	A, 24, 25, 34, 45, 160, 170			20-50	20-50							T
1.0 TSI, 1.2 TSI, 1.4 TSI, 1.4 TSI MultiFuel, 1.6	04.13 -	925	1050	PSS65-15-021-14-22	A, 24, 25, 35, 45, 160, 170			35-65	35-65							T
1.6 TDI, 2.0 TDI	04.13 -	1090	1050	PSS65-15-021-15-22	A, 24, 25, 35, 45, 160, 170			35-65	35-65							T
2.0 GTD	01.15 -	1090	1050	PSS65-15-021-15-22	A, 24, 25, 35, 45, 160, 170			20-50	20-50							T
1.0 TSI, 1.2 TSI, 1.4 TSI, 1.4 TSI MultiFuel, 1.6	04.13 -	985	1050	PSS65-15-021-16-22	A, 24, 25, 35, 45, 160, 171			35-65	35-65							T
1.8 TSI, 1.6 TDI, 2.0 TDI	04.13 -	1090	1050	PSS65-15-021-17-22	A, 24, 25, 35, 45, 160, 171			35-65	35-65							T
GOLF Sportsvan (AM1)																
Pro-Kit (Performance Fahrwerksfedern | *Performance Springs*)																
1.0 TSI, 1.2 TSI, 1.4 TSI, 1.4 TSI MultiFuel, 1.6	02.14 -	985	1075	E10-79-010-01-22	A, 18, 20, 170			30-40	30					F11-15-021-01-VA	F11-15-007-15-HA	T
1.4 TSI, 1.4 TSI Multi-Fuel, 1.6, 1.6 TDI, 2.0 TDI	02.14 -	1070	1075	E10-79-010-02-22	A, 18, 20, 170			30-40	30					F11-15-021-02-VA	F11-15-007-15-HA	T
1.0 TSI, 1.2 TSI, 1.4 TSI, 1.4 TSI MultiFuel, 1.6	02.14 -	985	1030	E10-79-010-03-22	A, 18, 20, 171			30-40	30					F11-15-021-01-VA	F11-70-012-01-HA	T
1.4 TSI, 1.4 TSI Multi-Fuel, 1.6, 1.6 TDI, 2.0 TDI	02.14 -	1070	1030	E10-79-010-04-22	A, 18, 20, 171			30-40	30					F11-15-021-02-VA	F11-70-012-01-HA	T
2.0 TDI	02.14 -	1090	1075	E10-85-041-02-22	A, 18, 20, 170			30-40	30					F11-85-041-01-VA	F11-15-007-15-HA	T
2.0 TDI	02.14 -	1090	1030	E10-85-041-03-22	A, 18, 20, 171			30-40	30					F11-85-041-01-VA	F11-70-012-01-HA	T
Anti-Roll-Kit (Performance Stabilisatoren | *Performance Sway Bars*)																
1.0 TSI, 1.2 TSI, 1.4 TSI, 1.4 TSI MultiFuel, 1.6, 1.6 TDI, 2.0 TDI	02.14 -			E40-15-021-01-11	A, 18, 20, 22, 45, 170					28 Rohr *28 tube*	25 Rohr *25 tube*	2-fach verstellbar *2-way adjustable*	nicht verstellbar *not adjustable*	AS41-15-021-01-VA	AS41-15-021-01-HA	T
1.0 TSI, 1.2 TSI, 1.4 TSI, 1.4 TSI MultiFuel, 1.6, 1.6 TDI, 2.0 TDI	02.14 -			E40-15-021-03-11	A, 18, 20, 22, 45, 171					28 Rohr *28 tube*	25	2-fach verstellbar *2-way adjustable*	nicht verstellbar *not adjustable*	AS41-15-021-01-VA	AS41-15-021-03-HA	T
Pro-Tronic (Elektronische Performance Fahrwerksmodule | *Electronic Performance Suspension Moduls*)																
Alle Motorisierungen / *all motorisation*	02.14 -			AM65-15-021-01-22	A, 175											
B12 Pro-Kit (Performance Komplettfahrwerke | *Performance Springs+Shocks*)																
1.0 TSI, 1.2 TSI, 1.4 TSI, 1.4 TSI MultiFuel, 1.6	02.14 -	985	1075	E90-79-010-01-22	A, 18, 20, 35, 78, 161, 170, 207			30-40	30					F11-15-021-01-VA	F11-15-007-15-HA	T
1.4 TSI, 1.4 TSI Multi-Fuel, 1.6, 1.6 TDI, 2.0 TDI	02.14 -	1070	1075	E90-79-010-02-22	A, 18, 20, 35, 78, 161, 170, 207			30-40	30					F11-15-021-02-VA	F11-15-007-15-HA	T
1.0 TSI, 1.2 TSI, 1.4 TSI, 1.4 TSI MultiFuel, 1.6	02.14 -	985	1030	E90-79-010-03-22	A, 18, 20, 35, 78, 161, 171, 206			30-40	30					F11-15-021-01-VA	F11-70-012-01-HA	T
1.4 TSI, 1.4 TSI Multi-Fuel, 1.6, 1.6 TDI, 2.0 TDI	02.14 -	1070	1030	E90-79-010-04-22	A, 18, 20, 35, 78, 161, 171, 206			30-40	30					F11-15-021-02-VA	F11-70-012-01-HA	T
2.0 TDI	02.14 -	1090	1075	E90-85-041-02-22	A, 18, 20, 35, 78, 161, 170, 207			30-40	30					F11-85-041-01-VA	F11-15-007-15-HA	T
2.0 TDI	02.14 -	1090	1030	E90-85-041-03-22	A, 18, 20, 35, 78, 161, 171, 206			30-40	30					F11-85-041-01-VA	F11-70-012-01-HA	T
1.0 TSI, 1.2 TSI, 1.4 TSI, 1.4 TSI MultiFuel, 1.6	02.14 -	985	1075	E90-79-010-05-22	A, 18, 20, 34, 78, 161, 170, 209			30-40	30					F11-15-021-01-VA	F11-15-007-15-HA	T
1.4 TSI, 1.4 TSI Multi-Fuel, 1.6, 1.6 TDI, 2.0 TDI	02.14 -	1070	1075	E90-79-010-06-22	A, 18, 20, 34, 78, 161, 170, 209			30-40	30					F11-15-021-02-VA	F11-15-007-15-HA	T
1.0 TSI, 1.2 TSI, 1.4 TSI, 1.4 TSI MultiFuel, 1.6	02.14 -	985	1030	E90-79-010-07-22	A, 18, 20, 34, 78, 161, 171, 208			30-40	30					F11-15-021-01-VA	F11-70-012-01-HA	T
1.4 TSI, 1.4 TSI Multi-Fuel, 1.6, 1.6 TDI, 2.0 TDI	02.14 -	1070	1030	E90-79-010-08-22	A, 18, 20, 34, 78, 161, 171, 208			30-40	30					F11-15-021-02-VA	F11-70-012-01-HA	T
2.0 TDI	02.14 -	1090	1075	E90-85-041-04-22	A, 18, 20, 34, 78, 161, 170, 209			30-40	30					F11-85-041-01-VA	F11-15-007-15-HA	T
2.0 TDI	02.14 -	1090	1030	E90-85-041-05-22	A, 18, 20, 34, 78, 161, 171, 208			30-40	30					F11-85-041-01-VA	F11-70-012-01-HA	T
JETTA I (16)																
Pro-Kit (Performance Fahrwerksfedern | *Performance Springs*)																
1.1, 1.3, 1.5, 1.5 D, 1.6, 1.6 D, 1.6 GLI, 1.6 TD, 1.8	08.78 - 02.84	785	630	E8501-140	A, 18, 20			30-40	30-35					F8501101	F8501002	T
B12 Pro-Kit (Performance Komplettfahrwerke | *Performance Springs+Shocks*)																
1.1, 1.3, 1.5, 1.5 D, 1.6, 1.6 D, 1.6 GLI, 1.6 TD, 1.8	08.78 - 02.84	785	630	E90-85-032-01-22	A, 18, 20, 78, 95, 161			30-40	30-35					F8501101	F8501002	T

VOLKSWAGEN

Modell *Model*	Baujahr *Year*	Achslast Vorne kg *Front Axle Load kg*	Achslast Hinten kg *Rear Axle Load kg*	Artikel-Nr. *Part-No.*	Hinweise *Notes*	ab Nachtrag ...xx BE *from suppl. ...xx of type approval*	bis Nachtrag ...xx BE *to suppl. ...xx of type approval*	ca. Tieferl. Vorne mm *ca. Lowering Front mm*	ca. Tieferl. Hinten mm *ca. Lowering Rear mm*	Ø Vorne mm *Ø Front mm*	Ø Hinten mm *Ø Rear mm*	Verstellbarkeit Vorne *Adjustable Front*	Verstellbarkeit Hinten *Adjustable Rear*	Ersatzteilbez. Vorne *Spare Part Marking Front*	Ersatzteilbez. Hinten *Spare Part Marking Rear*	Gutachten *Homologation*
JETTA II (19E, 1G2, 165)																
Pro-Kit (Performance Fahrwerksfedern | *Performance Springs*)																
1.3, 1.3 KAT, 1.6, 1.8, 1.8 16V, 1.8 KAT *1.3, 1.3 CAT, 1.6, 1.8, 1.8 16V, 1.8 CAT*	01.84 - 07.92	840	740	E8502-140	A, 18, 20			30-40	30-35					F8502001	F8502002	T
1.6 D, 1.6 TD	01.84 - 10.91	840	740	E8509-140	A, 18, 20			20	20					F8509001	F8502002	T
Anti-Roll-Kit (Performance Stabilisatoren | *Performance Sway Bars*)																
1.3, 1.3 KAT, 1.6, 1.6 D, 1.6 TD, 1.8, 1.8 16V, 1.8 KAT *1.3, 1.3 CAT, 1.6, 1.6 D, 1.6 TD, 1.8, 1.8 16V, 1.8 CAT*	01.84 - 07.92			E8502-320	A, 18, 20, 22, 45					22	25	nicht verstellbar *not adjustable*	nicht verstellbar *not adjustable*	AS8502320VA	AS8502320HA	T
B12 Pro-Kit (Performance Komplettfahrwerke | *Performance Springs+Shocks*)																
1.3, 1.3 KAT, 1.6, 1.8, 1.8 16V, 1.8 KAT *1.3, 1.3 CAT, 1.6, 1.8, 1.8 16V, 1.8 CAT*	01.84 - 07.92	840	740	E90-85-009-01-22	A, 18, 20, 78, 161			30-40	30-35					F8502001	F8502002	T
1.6 D, 1.6 TD	01.84 - 10.91	840	740	E90-85-009-02-22	A, 18, 20, 78, 161			20	20					F8509001	F8502002	T
Pro-Street-S (Gewindefahrwerke - höhenverstellbar | *Coil-Overs-Adjustable Ride Hight*)																
1.3, 1.3 KAT, 1.6, 1.6 D, 1.6 TD, 1.8, 1.8 16V, 1.8 KAT *1.3, 1.3 CAT, 1.6, 1.6 D, 1.6 TD, 1.8, 1.8 16V, 1.8 CAT*	01.84 - 07.92	840	740	PSS65-85-003-01-22	A, 20, 24, 25, 26, 45, 160			30-65	30-65							T
JETTA III (1K2)																
Pro-Kit (Performance Fahrwerksfedern | *Performance Springs*)																
1.6, 1.6 FSI, 1.6 MultiFuel	09.05 - 10.10	1010	1010	E10-85-015-05-22	A, 18, 20			30	30					F11-15-007-01-VA	F11-85-014-05-HA	ABE
1.4 TSI, 1.6, 1.6 FSI, 1.6 MultiFuel, 1.6 TDI, 1.9 TDI, 2.0 FSI, 2.0 TFSI	08.05 - 10.10	1080	1010	E10-85-015-06-22	A, 18, 20			30	30					F11-15-007-02-VA	F11-85-014-05-HA	ABE
1.9 TDI, 2.0 TDI, 2.0 TDI 16V	08.05 - 10.10	1150	1010	E10-85-015-07-22	A, 18, 20			30	30					F11-15-007-03-VA	F11-85-014-05-HA	ABE
Sportline (Performance Fahrwerksfedern Sport | *Sport Performance Springs*)																
1.4 TSI, 1.6, 1.6 FSI, 1.6 MultiFuel, 1.6 TDI, 1.9 TDI, 2.0 FSI, 2.0 TFSI	08.05 - 10.10	1040	1005	E20-85-015-01-22	A, 18, 20			45-50	30-35					F21-15-007-01-VA	F21-15-007-03-HA	ABE
1.6 TDI, 1.9 TDI, 2.0 FSI, 2.0 TDI, 2.0 TDI 16V, 2.0 TFSI	08.05 - 10.10	1130	1005	E20-85-015-02-22	A, 18, 20			45-50	30-35					F21-15-007-02-VA	F21-15-007-03-HA	ABE
Anti-Roll-Kit (Performance Stabilisatoren | *Performance Sway Bars*)																
1.4 TSI, 1.6, 1.6 FSI, 1.6 MultiFuel, 1.6 TDI, 1.9 TDI, 2.0 FSI, 2.0 TDI, 2.0 TDI 16V, 2.0 TFSI	08.05 - 10.10			E40-85-014-06-11	A, 18, 20, 22, 45					26	23	2-fach verstellbar *2-way adjustable*	2-fach verstellbar *2-way adjustable*	AS41-85-014-01-VA	AS41-85-014-01-HA	T
B12 Pro-Kit (Performance Komplettfahrwerke | *Performance Springs+Shocks*)																
1.6, 1.6 FSI, 1.6 MultiFuel	09.05 - 10.10	1010	1010	E90-85-015-05-22	A, 18, 20, 34, 78, 161			30	30					F11-15-007-01-VA	F11-85-014-05-HA	ABE
1.4 TSI, 1.6, 1.6 FSI, 2.0, 2.0 FSI, 2.0 TFSI, 1.6 TDI, 1.9 TDI	08.05 - 10.10	1080	1010	E90-85-015-06-22	A, 18, 20, 34, 78, 161			30	30					F11-15-007-02-VA	F11-85-014-05-HA	ABE
1.9 TDI, 2.0 TDI, 2.0 TDI 16V	08.05 - 10.10	1150	1010	E90-85-015-07-22	A, 18, 20, 34, 78, 161			30	30					F11-15-007-03-VA	F11-85-014-05-HA	ABE
B12 Sportline (Performance Komplettfahrwerke Sport | *Sport Performance Springs+Shocks*)																
1.4 TSI, 1.6, 1.6 FSI, 1.9 TDI, 2.0 FSI, 2.0 TFSI	08.05 - 10.10	1040	1005	E95-85-015-01-22	A, 18, 20, 34, 78, 161			45-50	30-35					F21-15-007-01-VA	F21-15-007-03-HA	ABE
1.9 TDI, 2.0 TDI, 2.0 TDI 16V, 2.0 TFSI	08.05 - 10.10	1130	1005	E95-85-015-02-22	A, 18, 20, 34, 78, 161			45-50	30-35					F21-15-007-02-VA	F21-15-007-03-HA	ABE
Pro-Street-S (Gewindefahrwerke - höhenverstellbar | *Coil-Overs-Adjustable Ride Hight*)																
1.4 TSI, 1.6, 1.6 FSI, 1.6 MultiFuel, 1.6 TDI, 1.9 TDI, 2.0 FSI, 2.0 TDI, 2.0 TDI 16V, 2.0 TFSI, 2.5 FSI	08.05 - 10.10	1035	1150	PSS65-85-014-01-22	A, 18, 20, 24, 34, 45, 101, 160			35-65	35-65							T
1.4 TSI, 1.6, 1.6 FSI, 1.6 MultiFuel, 1.6 TDI, 1.9 TDI, 2.0 FSI, 2.0 TDI, 2.0 TDI 16V, 2.0 TFSI, 2.5 FSI	08.05 - 10.10	1035	1150	PSS65-85-014-02-22	A, 18, 20, 24, 35, 45, 101, 160			35-65	35-65							T
1.4 TSI, 1.6, 1.6 FSI, 1.6 MultiFuel, 1.6 TDI, 1.9 TDI, 2.0 FSI, 2.0 TDI, 2.0 TDI 16V, 2.0 TFSI, 2.5 FSI	08.05 - 10.10	1105	1150	PSS65-85-014-03-22	A, 18, 20, 24, 34, 45, 101, 160			35-65	35-65							T
1.4 TSI, 1.6, 1.6 FSI, 1.6 MultiFuel, 1.6 TDI, 1.9 TDI, 2.0 FSI, 2.0 TDI, 2.0 TDI 16V, 2.0 TFSI, 2.5 FSI	08.05 - 10.10	1105	1150	PSS65-85-014-04-22	A, 18, 20, 24, 35, 45, 101, 160			35-65	35-65							T
1.4 TSI, 1.6, 1.6 FSI, 1.6 MultiFuel, 1.6 TDI, 1.9 TDI, 2.0 FSI, 2.0 TDI, 2.0 TDI 16V, 2.0 TFSI, 2.5 FSI	08.05 - 10.10	1170	1150	PSS65-85-014-05-22	A, 18, 20, 24, 34, 45, 101, 160			35-65	35-65							T
1.4 TSI, 1.6, 1.6 FSI, 1.6 MultiFuel, 1.6 TDI, 1.9 TDI, 2.0 FSI, 2.0 TDI, 2.0 TDI 16V, 2.0 TFSI, 2.5 FSI	08.05 - 10.10	1170	1150	PSS65-85-014-06-22	A, 18, 20, 24, 35, 45, 101, 160			35-65	35-65							T
JETTA IV (162)																
Pro-Kit (Performance Fahrwerksfedern | *Performance Springs*)																
1.4 TSI Hybrid	04.11 -	990	1080	E10-85-031-03-22	A, 18, 20			35	30					F11-15-007-01-VA	F11-15-007-04-HA	ABE
1.2 TSI, 1.4 TSI, 1.6, 1.6 TDI	02.11 -	1010	980	E10-85-031-01-22	A, 18, 20			20-30	25-30					F11-15-007-01-VA	F11-85-014-05-HA	ABE
1.6 TDI, 2.0, 2.0 TDI, 2.0 TSI	06.10 -	1120	980	E10-85-031-02-22	A, 18, 20			20-30	25-30					F11-15-007-02-VA	F11-85-014-05-HA	ABE
Sportline (Performance Fahrwerksfedern Sport | *Sport Performance Springs*)																
1.2 TSI, 1.4 TSI, 1.6, 1.6 TDI, 2.0, 2.0 TDI, 2.0 TSI	06.10 -	1040	1005	E20-85-015-01-22	A, 18, 20			30-40	30					F21-15-007-01-VA	F21-15-007-03-HA	ABE
1.6 TDI, 2.0, 2.0 TDI, 2.0 TSI	06.10 -	1130	1005	E20-85-015-02-22	A, 18, 20			30-40	30					F21-15-007-02-VA	F21-15-007-03-HA	ABE
Anti-Roll-Kit (Performance Stabilisatoren | *Performance Sway Bars*)																
1.2 TSI, 1.4 TSI, 1.4 TSI Hybrid, 1.6, 1.6 TDI, 2.0, 2.0 TDI, 2.0 TSI	06.10 -			E40-85-014-06-11	A, 18, 20, 22, 45					26	23	2-fach verstellbar *2-way adjustable*	2-fach verstellbar *2-way adjustable*	AS41-85-014-01-VA	AS41-85-014-01-HA	T
B12 Pro-Kit (Performance Komplettfahrwerke | *Performance Springs+Shocks*)																
1.2 TSI, 1.4 TSI, 1.6, 1.6 TDI	04.10 -	1010	980	E90-85-031-01-22	A, 18, 20, 35, 78, 161, 202			25	20					F11-15-007-01-VA	F11-85-014-05-HA	ABE
1.6 TDI, 2.0 TDI, 2.0 TSI	04.10 -	1120	980	E90-85-031-02-22	A, 18, 20, 35, 78, 161, 202			25	20					F11-15-007-02-VA	F11-85-014-05-HA	ABE
1.4 TSI Hybrid	04.11 -	990	1080	E90-85-031-03-22	A, 18, 20, 35, 78, 161, 202			25	25					F11-15-007-01-VA	F11-15-007-04-HA	ABE
1.2 TSI, 1.4 TSI, 1.6, 1.6 TDI	04.10 -	1010	980	E90-85-031-04-22	A, 18, 20, 34, 78, 161, 202			25	20					F11-15-007-01-VA	F11-85-014-05-HA	ABE
1.6 TDI, 2.0 TDI, 2.0 TSI	04.10 -	1120	980	E90-85-031-05-22	A, 18, 20, 34, 78, 161, 202			25	20					F11-15-007-02-VA	F11-85-014-05-HA	ABE
1.4 TSI Hybrid	04.11 -	990	1080	E90-85-031-06-22	A, 18, 20, 34, 78, 161, 202			25	25					F11-15-007-01-VA	F11-15-007-04-HA	ABE

VOLKSWAGEN

Modell	Baujahr	Achslast Vorne kg	Achslast Hinten kg	Artikel-Nr.	Hinweise	ab Nachtrag ...xx BE	bis Nachtrag ...xx BE	ca. Tieferl. Vorne mm	ca. Tieferl. Hinten mm	Ø Vorne mm	Ø Hinten mm	Verstellbarkeit Vorne	Verstellbarkeit Hinten	Ersatzteilbez. Vorne	Ersatzteilbez. Hinten	Gutachten
Model	*Year*	*Front Axle Load kg*	*Rear Axle Load kg*	*Part-No.*	*Notes*	*from suppl. ...xx of type approval*	*to suppl. ...xx of type approval*	*ca. Lowering Front mm*	*ca. Lowering Rear mm*	*Ø Front mm*	*Ø Rear mm*	*Adjustable Front*	*Adjustable Rear*	*Spare Part Marking Front*	*Spare Part Marking Rear*	*Homologation*
JETTA IV (162)																
B12 Sportline (Performance Komplettfahrwerke Sport | *Sport Performance Springs+Shocks*)																
1.2 TSI, 1.4 TSI, 1.6, 1.6 TDI, 2.0 TDI, 2.0 TSI	04.10 -	1040	1005	E95-85-031-01-22	A, 18, 20, 35, 78, 161, 202			30-40	30					F21-15-007-01-VA	F21-15-007-03-HA	ABE
2.0 TDI	04.10 -	1130	1005	E95-85-031-02-22	A, 18, 20, 35, 78, 161, 202			30-40	30					F21-15-007-02-VA	F21-15-007-03-HA	ABE
1.2 TSI, 1.4 TSI, 1.6, 1.6 TDI, 2.0 TDI, 2.0 TSI	04.10 -	1040	1005	E95-85-031-03-22	A, 18, 20, 34, 78, 161, 202			30-40	30					F21-15-007-01-VA	F21-15-007-03-HA	ABE
2.0 TDI	04.10 -	1130	1005	E95-85-031-04-22	A, 18, 20, 34, 78, 161, 202			30-40	30					F21-15-007-02-VA	F21-15-007-03-HA	ABE
LUPO (6X1, 6E1)																
Pro-Kit (Performance Fahrwerksfedern | *Performance Springs*)																
1.0, 1.4, 1.4 16V, 1.4 TDI, 1.6 GTI, 1.7 SDI	09.98 - 07.05	820	690	E8562-140	A, 18, 20			30	30					F8546001	F8111002	T
B12 Pro-Kit (Performance Komplettfahrwerke | *Performance Springs+Shocks*)																
1.0, 1.4, 1.4 16V, 1.4 TDI, 1.7 SDI	09.98 - 07.05	820	690	E90-85-010-02-22	A, 18, 20, 78, 161			30	30					F8546001	F8111002	T
MULTIVAN V (7HM, 7HN, 7HF, 7EF, 7EM, 7EN)																
Pro-Kit (Performance Fahrwerksfedern | *Performance Springs*)																
1.9 TDI, 2.0, 2.0 BiTDI, 2.0 BiTDI 4motion, 2.0 TDI, 2.0 TDI 4motion, 2.0 TSI, 2.0 TSI 4motion	04.03 -	1550	1720	E10-85-013-01-22	A, 12, 18			30	30					F11-85-013-01-VA	F11-85-013-01-HA	T
2.0 BiTDI, 2.0 BiTDI 4motion, 2.0 TDI, 2.0 TDI 4motion, 2.0 TSI, 2.0 TSI 4motion	09.09 -	1710		E10-85-013-04-20	A, 18, 102			35						F11-85-013-02-VA		T
2.0 BiTDI, 2.0 BiTDI 4motion, 2.0 TDI, 2.0 TDI 4motion, 2.0 TSI, 2.0 TSI 4motion, 2.5 TDI, 2.5 TDI 4motion, 3.2 V6, 3.2 V6 4motion	04.03 -	1710	1720	E10-85-013-02-22	A, 12, 18			35	30					F11-85-013-02-VA	F11-85-013-01-HA	T
B12 Pro-Kit (Performance Komplettfahrwerke | *Performance Springs+Shocks*)																
1.9 TDI, 2.0, 2.0 BiTDI, 2.0 BiTDI 4motion, 2.0 TDI, 2.0 TDI 4motion, 2.0 TSI, 2.0 TSI 4motion	04.03 -	1550	1720	E90-85-013-01-22	A, 12, 18, 78, 97, 161			30	30					F11-85-013-01-VA	F11-85-013-01-HA	T
2.0 TSI, 2.0 TSI 4motion, 3.2 V6, 3.2 4motion, 3.2 V6 4motion, 2.0 TDI, 2.0 TDI 4motion, 2.0 BiTDI, 2.0 BiTDI 4motion, 2.5 TDI, 2.5 TDI 4motion	04.03 -	1710	1720	E90-85-013-02-22	A, 12, 18, 78, 97, 161			30	30					F11-85-013-02-VA	F11-85-013-01-HA	T
Pro-Street-S (Gewindefahrwerke - höhenverstellbar | *Coil-Overs-Adjustable Ride Hight*)																
2.0 TSI, 2.0 TSI 4motion, 3.2 V6, 3.2 4motion, 3.2 V6 4motion, 2.0 TDI, 2.0 TDI 4motion, 2.0 BiTDI, 2.0 BiTDI 4motion, 2.5 TDI, 2.5 TDI 4motion	04.03 -	1710	1720	PSS65-85-013-01-22	A,18,21,24,45, 160			35-65	35-65							T
NEW BEETLE (9C1, 1C1)																
Pro-Kit (Performance Fahrwerksfedern | *Performance Springs*)																
1.4, 1.6, 1.8 T, 1.9 TDI, 2.0	01.98 -	1010	850	E8570-140	A, 18, 20			30	30					F1545001	F8570002	T
1.8 T, 1.9 TDI, 2.3 V5	01.98 -	1050	850	E10-85-005-01-22	A, 18, 20			30	30					F8592001	F8570002	T
Anti-Roll-Kit (Performance Stabilisatoren | *Performance Sway Bars*)																
1.4, 1.6, 1.8 T, 1.9 TDI, 2.0, 2.3 V5	01.98 -			E40-85-005-01-11	A, 18, 20, 22, 45					25	25	nicht verstellbar *not adjustable*	nicht verstellbar *not adjustable*	AS41-85-005-01-VA	AS1540320HA	T
B12 Pro-Kit (Performance Komplettfahrwerke | *Performance Springs+Shocks*)																
1.4, 1.6, 1.8 T, 1.9 TDI, 2.0	01.98 -	1010	850	E90-85-005-01-22	A, 18, 20, 78, 161			30	30					F1545001	F8570002	T
1.8 T, 1.9 TDI, 2.3 V5	01.98 -	1050	850	E90-85-005-02-22	A, 18, 20, 78, 161			30	30					F8592001	F8570002	T
Pro-Street-S (Gewindefahrwerke - höhenverstellbar | *Coil-Overs-Adjustable Ride Hight*)																
1.4, 1.6, 1.8 T, 2.0, 1.9 TDI, 2.3 V5	01.98 -	1030	1025	PSS65-85-001-01-22	A, 20, 24, 25, 26, 45, 160			35-65	35-65							T
NEW BEETLE Cabriolet (1Y7)																
NEW BEETLE Convertible (1Y7)																
Pro-Kit (Performance Fahrwerksfedern | *Performance Springs*)																
1.4, 1.6, 1.9 TDI, 2.0	09.02 - 10.10	1010	870	E10-85-005-02-22	A, 18, 20			25	25					F1567001	F11-15-001-01-HA	T
1.8 T, 1.9 TDI, 2.0	09.02 - 10.10	1050	870	E10-85-005-03-22	A, 18, 20			25	25					F8592001	F11-15-001-01-HA	T
Anti-Roll-Kit (Performance Stabilisatoren | *Performance Sway Bars*)																
1.4, 1.6, 1.8 T, 1.9 TDI, 2.0	09.02 - 10.10			E40-85-005-01-11	A, 18, 20, 22, 45					25	25	nicht verstellbar *not adjustable*	nicht verstellbar *not adjustable*	AS41-85-005-01-VA	AS1540320HA	T
B12 Pro-Kit (Performance Komplettfahrwerke | *Performance Springs+Shocks*)																
1.4, 1.6, 1.9 TDI, 2.0	09.02 - 10.10	1010	870	E90-85-005-03-22	A, 18, 20, 78, 161			25	25					F1567001	F11-15-001-01-HA	T
1.8 T, 1.9 TDI, 2.0	09.02 - 10.10	1050	870	E90-85-005-04-22	A, 18, 20, 78, 161			25	25					F8592001	F11-15-001-01-HA	T
PASSAT (3B2)																
Pro-Kit (Performance Fahrwerksfedern | *Performance Springs*)																
1.6, 1.8, 1.8 T	10.96 - 11.00	1020	1010	E8553-140	A, 18, 20			30	30					F1531001	F8553002	T
1.8, 1.8 T, 1.9 TDI, 2.3 VR5	10.96 - 11.00	1090	1010	E8554-140	A, 18, 20			30	30					F1532001	F8553002	T
2.5 TDI	07.98 - 11.00	1190	1010	E8584-140	A, 18, 20			30	30					F1558001	F8553002	T
Anti-Roll-Kit (Performance Stabilisatoren | *Performance Sway Bars*)																
1.6, 1.8, 1.8 T, 1.9 TDI, 1.9 TDI 4motion, 2.0 4motion, 2.3 VR5, 2.3 VR5 Syncro/4motion, 2.5 TDI, 2.5 TDI Syncro/4motion, 2.8 V6	08.96 - 11.00			E1531-310	A, 18, 20, 22, 45					32		2-fach verstellbar *2-way adjustable*		AS1531310VA		T
1.8 Syncro/4motion, 1.8 T Syncro, 1.9 TDI Syncro/4motion, 2.8 Syncro, 2.8 V6 Syncro/4motion	10.96 - 11.00			E1531-310	A, 18, 22, 45					32		2-fach verstellbar *2-way adjustable*		AS1531310VA		T
B12 Pro-Kit (Performance Komplettfahrwerke | *Performance Springs+Shocks*)																
1.6, 1.8, 1.8 T	10.96 - 11.00	1020	1010	E90-85-002-01-22	A, 18, 20, 78, 104, 161			30	30					F1531001	F8553002	T
1.8, 1.8 T, 1.9 TDI, 2.3 VR5	10.96 - 11.00	1090	1010	E90-85-002-02-22	A, 18, 20, 78, 104, 161			30	30					F1532001	F8553002	T
2.5 TDI	07.98 - 11.00	1190	1010	E90-85-002-03-22	A, 18, 20, 78, 104, 161			30	30					F1558001	F8553002	T

VOLKSWAGEN

Modell *Model*	Baujahr *Year*	Achslast Vorne kg *Front Axle Load kg*	Achslast Hinten kg *Rear Axle Load kg*	Artikel-Nr. *Part-No.*	Hinweise *Notes*	ab Nachtrag ...xx BE *from suppl. ...xx of type approval*	bis Nachtrag ...xx BE *to suppl. ...xx of type approval*	ca. Tieferl. Vorne mm *ca. Lowering Front mm*	ca. Tieferl. Hinten mm *ca. Lowering Rear mm*	Ø Vorne mm *Ø Front mm*	Ø Hinten mm *Ø Rear mm*	Verstellbarkeit Vorne *Adjustable Front*	Verstellbarkeit Hinten *Adjustable Rear*	Ersatzteilbez. Vorne *Spare Part Marking Front*	Ersatzteilbez. Hinten *Spare Part Marking Rear*	Gutachten *Homologation*
PASSAT (3B2)																
Pro-Street-S (Gewindefahrwerke - höhenverstellbar | *Coil-Overs-Adjustable Ride Hight*)																
1.6, 1.8, 1.8 T, 1.9 TDI, 2.0, 2.3 VR5, 2.5 TDI, 2.8 V6	08.96 - 11.00	1100	1080	PSS65-85-002-01-22	A, 18, 20, 24, 25, 45, 160			40-75	40-75							T
1.8 Syncro/4motion, 1.8 T Syncro, 1.9 TDI 4motion, 1.9 TDI Syncro/4motion, 2.0 4motion, 2.3 VR5 Syncro/4motion, 2.5 TDI Syncro/4motion, 2.8 Syncro, 2.8 V6 Syncro/4motion	10.96 - 11.00	1100	1160	PSS65-85-002-03-22	A, 18, 22, 25, 45, 160			40-75	40-75							T
1.8, 1.8 T, 1.9 TDI, 2.0, 2.3 VR5, 2.5 TDI, 2.8 V6	08.96 - 11.00	1200	1080	PSS65-85-002-02-22	A, 18, 20, 24, 25, 45, 160			40-75	40-75							T
1.8 Syncro/4motion, 1.8 T Syncro, 1.9 TDI 4motion, 1.9 TDI Syncro/4motion, 2.0 4motion, 2.3 VR5 Syncro/4motion, 2.5 TDI Syncro/4motion, 2.8 Syncro, 2.8 V6 Syncro/4motion	10.96 - 11.00	1200	1160	PSS65-15-005-03-22	A, 18, 25, 45, 160			40-75	40-75							T
PASSAT (3B3)																
Pro-Kit (Performance Fahrwerksfedern | *Performance Springs*)																
1.6, 1.8, 1.8 T, 1.8 T 20V, 2.0	11.00 - 05.05	1070	1070	E10-85-002-05-22	A, 18, 20			30	30					F1532001	F8553002	T
1.8, 1.8 T, 1.8 T 20V, 1.9 TDI, 2.0 TDI, 2.3 V5	11.00 - 05.05	1175	1070	E10-85-002-06-22	A, 18, 20			30	30					F1541001	F8553002	T
2.3 V5, 2.5 TDI	11.00 - 05.05	1250	1070	E10-85-002-07-22	A, 18, 20			30	30					F1558001	F8553202	T
Anti-Roll-Kit (Performance Stabilisatoren | *Performance Sway Bars*)																
1.6, 1.8, 1.8 T, 1.8 T 20V, 1.9 TDI, 1.9 TDI 4motion, 2.0, 2.0 4motion, 2.0 TDI, 2.3 V5, 2.3 V5 4motion, 2.5 TDI, 2.5 TDI 4motion, 2.8 4motion	11.00 - 05.05			E1531-310	A, 18, 20, 22, 45					32		2-fach verstellbar *2-way adjustable*		AS1531310VA		T
2.5 TDI 4motion	01.03 - 05.05			E1531-310	A, 18, 22, 45					32		2-fach verstellbar *2-way adjustable*		AS1531310VA		T
B12 Pro-Kit (Performance Komplettfahrwerke | *Performance Springs+Shocks*)																
1.6, 1.8, 1.8 T, 1.8 T 20V, 2.0	12.00 - 05.05	1070	1070	E90-85-002-10-22	A, 18, 20, 78, 87, 133, 161			30	30					F1532001	F8553002	T
1.8, 1.8 T, 1.8 T 20V, 1.9 TDI, 2.0 TDI, 2.3 V5	12.00 - 05.05	1175	1070	E90-85-002-11-22	A, 18, 20, 78, 87, 133, 161			30	30					F1541001	F8553002	T
2.3 V5, 2.5 TDI	12.00 - 05.05	1250	1070	E90-85-002-12-22	A, 18, 20, 78, 87, 133, 161			30	30					F1558001	F8553202	T
Pro-Street-S (Gewindefahrwerke - höhenverstellbar | *Coil-Overs-Adjustable Ride Hight*)																
1.6, 1.8, 1.8 T, 1.8 T 20V, 1.9 TDI, 2.0, 2.0 TDI, 2.3 V5, 2.5 TDI	11.00 - 05.05	1100	1080	PSS65-85-002-01-22	A, 18, 20, 24, 25, 45, 160			40-75	40-75							T
1.8 T, 1.8 T 20V	11.00 - 05.05	1100	1160	PSS65-85-002-03-22	A, 18, 24, 25, 45, 160			40-75	40-75							T
1.8 T 4motion, 1.9 TDI 4motion, 2.0 4motion, 2.3 V5 4motion, 2.5 TDI 4motion, 2.8 4motion	11.00 - 05.05	1100	1160	PSS65-85-002-03-22	A, 18, 22, 25, 45, 160			40-75	40-75							T
1.6, 1.8, 1.8 T, 1.8 T 20V, 1.9 TDI, 2.0, 2.0 TDI, 2.3 V5, 2.5 TDI	11.00 - 05.05	1200	1080	PSS65-85-002-02-22	A, 18, 20, 24, 25, 45, 160			40-75	40-75							T
1.8 T, 1.8 T 20V	11.00 - 05.05	1200	1160	PSS65-15-005-03-22	A, 18, 24, 25, 45, 160			40-75	40-75							T
1.8 T 4motion, 1.9 TDI 4motion, 2.0 4motion, 2.3 V5 4motion, 2.5 TDI 4motion, 2.8 4motion	11.00 - 05.05	1200	1160	PSS65-15-005-03-22	A, 18, 25, 45, 160			40-75	40-75							T
PASSAT (3C2)																
Pro-Kit (Performance Fahrwerksfedern | *Performance Springs*)																
1.4 TSI, 1.6, 1.6 FSI, 2.0 FSI	03.05 -	1070	1160	E10-85-016-01-22	A, 18, 20		36	30	30					F11-15-007-02-VA	F11-85-012-01-HA	ABE
1.4 TSI, 1.6 TDI, 1.8 TSI, 1.9 TDI, 2.0 BlueTDI, 2.0 FSI, 2.0 TDI, 2.0 TDI 16V	03.05 -	1180	1160	E10-85-016-02-22	A, 18, 20		36	30	30					F11-15-007-03-VA	F11-85-012-01-HA	ABE
2.0 FSI 4motion, 2.0 TDI 16V 4motion, 2.0 TDI 4motion, 3.2 FSI 4motion	03.05 -	1180	1230	E10-85-016-10-22	A, 18		36	30	30					F11-15-007-03-VA	F11-85-016-10-HA	ABE
Anti-Roll-Kit (Performance Stabilisatoren | *Performance Sway Bars*)																
1.4 TSI, 1.6, 1.6 FSI, 1.6 TDI, 1.8 TSI, 1.9 TDI, 2.0 BlueTDI, 2.0 FSI, 2.0 TDI, 2.0 TDI 16V	03.05 -			E40-85-014-06-11	A, 18, 20, 22, 45					26	23	2-fach verstellbar *2-way adjustable*	2-fach verstellbar *2-way adjustable*	AS41-85-014-01-VA	AS41-85-014-01-HA	T
Pro-Tronic (Elektronische Performance Fahrwerksmodule | *Electronic Performance Suspension Moduls*)																
Alle Motorisierungen / *all motorisation*	03.05 -			AM65-85-022-01-22	A, 175											
B12 Pro-Kit (Performance Komplettfahrwerke | *Performance Springs+Shocks*)																
1.4 TSI, 1.4 TSI EcoFuel, 1.6, 1.6 FSI, 2.0 FSI	03.05 -	1070	1130	E90-85-016-01-22	A, 18, 20, 34, 78, 101, 161		36	30	30					F11-15-007-02-VA	F11-85-012-01-HA	ABE
1.4 TSI, 1.4 TSI EcoFuel, 1.6, 1.6 TDI, 1.8 TSI, 1.9 TDI, 2.0 FSI, 2.0 TDI, 2.0 TDI 16V	07.05 -	1180	1130	E90-85-016-02-22	A, 18, 20, 34, 78, 101, 161		36	30	30					F11-15-007-03-VA	F11-85-012-01-HA	ABE
2.0 FSI 4motion, 2.0 TDI 16V 4motion, 2.0 TDI 4motion, 3.2 FSI 4motion	03.05 -	1180	1230	E90-85-016-10-22	A, 18, 34, 78, 101, 161		36	30	30					F11-15-007-03-VA	F11-85-016-10-HA	ABE
Pro-Street-S (Gewindefahrwerke - höhenverstellbar | *Coil-Overs-Adjustable Ride Hight*)																
1.4 TSI, 1.6, 1.6 FSI, 2.0 FSI	03.05 - 07.10	1060	1230	PSS65-15-007-01-22	A, 18, 24, 45, 160			35-70	35-70							T
1.4 TSI, 1.6, 1.6 FSI, 2.0 FSI, 2.0 FSI 4motion, 2.0 TDI 16V 4motion, 2.0 TDI 4motion, 3.2 FSI 4motion	03.05 -	1060	1230	PSS65-85-016-01-22	A, 18, 24, 45, 160			35-70	35-70							T
1.4 TSI, 1.6 TDI, 1.8 TSI, 1.9 TDI, 2.0 BlueTDI, 2.0 FSI, 2.0 FSI 4motion, 2.0 TDI, 2.0 TDI 16V, 2.0 TDI 16V 4motion, 2.0 TDI 4motion, 3.2 FSI 4motion	03.05 -	1180	1230	PSS65-85-016-02-22	A, 18, 24, 45, 160			35-70	35-70							T
1.4 TSI, 1.6 TDI, 1.8 TSI, 1.9 TDI, 2.0 BlueTDI, 2.0 FSI, 2.0 TDI, 2.0 TDI 16V, 2.0 TDI 16V 4motion, 2.0 TDI 4motion, 3.2 FSI 4motion	03.05 -	1180	1230	PSS65-15-007-02-22	A, 18, 24, 45, 160			35-70	35-70							T
PASSAT (3G2)																
Pro-Kit (Performance Fahrwerksfedern | *Performance Springs*)																
1.4 TSI	11.14 -	985	1220	E10-85-042-01-22	A, 18, 20	37		30-35	25					F11-15-021-01-VA	F11-15-007-04-HA	T
2.0 TSI 4motion, 2.0 TDI, 2.0 TDI 4motion	11.14 -	1100	1220	E10-85-042-02-22	A, 18	37		30-35	25					F11-85-041-01-VA	F11-15-007-04-HA	T
2.0 TSI 4motion, 2.0 TDI 4motion	08.14 -	1160	1220	E10-85-042-03-22	A, 18	37		30-35	30					F11-85-042-03-FA	F11-15-007-04-HA	T
1.4 TSI, 1.4 TSI 4motion, 1.8 TSI, 2.0 TSI, 1.6 TDI, 2.0 TDI	08.14 -	1070	1220	E10-85-041-04-22	A, 18	37		30-35	25					F11-15-021-02-VA	F11-15-007-04-HA	T

VOLKSWAGEN

Modell	Baujahr	Achslast Vorne kg	Achslast Hinten kg	Artikel-Nr.	Hinweise	ab Nachtrag ...xx BE	bis Nachtrag ...xx BE	ca. Tieferl. Vorne mm	ca. Tieferl. Hinten mm	Ø Vorne mm	Ø Hinten mm	Verstellbarkeit Vorne	Verstellbarkeit Hinten	Ersatzteilbez. Vorne	Ersatzteilbez. Hinten	Gutachten
Model	*Year*	*Front Axle Load kg*	*Rear Axle Load kg*	*Part-No.*	*Notes*	*from suppl. ...xx of type approval*	*to suppl. ...xx of type approval*	*ca. Lowering Front mm*	*ca. Lowering Rear mm*	*Ø Front mm*	*Ø Rear mm*	*Adjustable Front*	*Adjustable Rear*	*Spare Part Marking Front*	*Spare Part Marking Rear*	*Homologation*
PASSAT (362)																
Pro-Kit (Performance Fahrwerksfedern | *Performance Springs*)																
1.4 TSI, 1.4 TSI MultiFuel	08.10 -	1070	1160	E10-85-016-01-22	A, 18, 20		36	30	25					F11-15-007-02-VA	F11-85-012-01-HA	T
1.8 TSI, 2.0 TSI, 1.6 TDI, 2.0 TDI, 3.6 FSI	08.10 -	1180	1160	E10-85-016-02-22	A, 18, 20		36	30	25					F11-15-007-03-VA	F11-85-012-01-HA	T
2.0 TDI 4motion	08.10 -	1180	1230	E10-85-016-10-22	A, 18		36	30	25					F11-15-007-03-VA	F11-85-016-10-HA	T
3.6 FSI 4motion	08.10 -	1180	1230	E10-85-016-10-22	A, 18		36	10	5					F11-15-007-03-VA	F11-85-016-10-HA	T
Anti-Roll-Kit (Performance Stabilisatoren | *Performance Sway Bars*)																
1.4 TSI, 1.4 TSI MultiFuel, 1.6 TDI, 1.8 TSI, 2.0 TDI, 2.0 TSI	08.10 -			E40-85-014-06-11	A, 18, 20, 22, 45					26	23	2-fach verstellbar *2-way adjustable*	2-fach verstellbar *2-way adjustable*	AS41-85-014-01-VA	AS41-85-014-01-HA	T
B12 Pro-Kit (Performance Komplettfahrwerke | *Performance Springs+Shocks*)																
1.4 TSI, 1.4 TSI MultiFuel	08.10 -	1070	1130	E90-85-016-01-22	A, 18, 20, 34, 78, 101, 161		36	30	30					F11-15-007-02-VA	F11-85-012-01-HA	T
1.4 TSI, 1.6 TDI, 1.8 TSI, 2.0 TDI, 2.0 TSI	08.10 -	1180	1130	E90-85-016-02-22	A, 18, 20, 34, 78, 101, 161		36	30	30					F11-15-007-03-VA	F11-85-012-01-HA	T
2.0 TDI 4motion	08.10 -	1180	1230	E90-85-016-10-22	A, 18, 34, 78, 101, 161		36	30	30					F11-15-007-03-VA	F11-85-016-10-HA	T
3.6 FSI 4motion	08.10 -	1180	1230	E90-85-016-10-22	A, 18, 34, 78, 101, 161		36	30	30					F11-15-007-03-VA	F11-85-016-10-HA	T
Pro-Street-S (Gewindefahrwerke - höhenverstellbar | *Coil-Overs-Adjustable Ride Hight*)																
1.4 TSI, 1.4 TSI MultiFuel	08.10 -	1060	1230	PSS65-85-016-01-22	A, 18, 24, 45, 160			35-70	35-70							T
1.6 TDI, 1.8 TSI, 2.0 TDI, 2.0 TDI 4motion, 2.0 TSI, 3.6 FSI 4motion	08.10 -	1180	1230	PSS65-85-016-02-22	A, 18, 24, 45, 160			35-70	35-70							T
PASSAT ALLTRACK (365)																
Pro-Kit (Performance Fahrwerksfedern | *Performance Springs*)																
2.0 TSI 4motion, 2.0 TDI 4motion	01.12 -	1180	1230	E10-85-016-10-22	A, 18		36	30	25					F11-15-007-03-VA	F11-85-016-10-HA	ABE
B12 Pro-Kit (Performance Komplettfahrwerke | *Performance Springs+Shocks*)																
2.0 TSI 4motion, 2.0 TDI 4motion	01.12 -	1180	1230	E90-85-016-10-22	A, 18, 21, 34, 78, 101, 161		36	30	30					F11-15-007-03-VA	F11-85-016-10-HA	ABE
Pro-Street-S (Gewindefahrwerke - höhenverstellbar | *Coil-Overs-Adjustable Ride Hight*)																
2.0 TSI 4motion, 2.0 TDI 4motion	01.12 -	1180	1230	PSS65-85-016-04-22	A, 18, 24, 45, 160			35-70	35-70							T
PASSAT CC (357)																
Pro-Kit (Performance Fahrwerksfedern | *Performance Springs*)																
1.8 TSI, 2.0 TDI, 2.0 TSI	05.08 -	1110	1030	E10-85-016-08-22	A, 18, 20			25	20					F11-15-007-02-VA	F11-85-014-05-HA	ABE
2.0 TSI, 2.0 TDI, 2.0 TDI BlueTDI	05.08 -	1170	1030	E10-85-016-13-22	A, 18, 20			25	20					F11-15-007-03-VA	F11-85-014-05-HA	ABE
2.0 TDI 4motion, 3.6 FSI 4motion	06.08 -	1170	1110	E10-85-016-09-22	A, 18			25	25					F11-15-007-03-VA	F11-15-007-15-HA	ABE
Anti-Roll-Kit (Performance Stabilisatoren | *Performance Sway Bars*)																
1.8 TSI, 2.0 TSI, 2.0 TDI, 2.0 TDI BlueTDI	05.08 -			E40-85-014-06-11	A, 18, 20, 22, 45					26	23	2-fach verstellbar *2-way adjustable*	2-fach verstellbar *2-way adjustable*	AS41-85-014-01-VA	AS41-85-014-01-HA	T
Pro-Tronic (Elektronische Performance Fahrwerksmodule | *Electronic Performance Suspension Moduls*)																
Alle Motorisierungen / *all motorisation*	05.08 -			AM65-85-022-01-22	A, 175											
B12 Pro-Kit (Performance Komplettfahrwerke | *Performance Springs+Shocks*)																
1.8 TSI, 2.0 TDI, 2.0 TSI	05.08 -	1110	1030	E90-85-016-08-22	A, 18, 20, 34, 78, 161			25	20					F11-15-007-02-VA	F11-85-014-05-HA	ABE
2.0 TDI, 2.0 TSI, 2.0 TDI BlueTDI	05.08 -	1170	1030	E90-85-016-13-22	A, 18, 20, 34, 78, 161			25	25					F11-15-007-03-VA	F11-85-014-05-HA	ABE
2.0 TDI 4motion, 3.6 FSI, 3.6 FSI 4motion	06.08 -	1170	1110	E90-85-016-09-22	A, 18, 34, 78, 161			25	25					F11-15-007-03-VA	F11-85-014-05-HA	ABE
Pro-Street-S (Gewindefahrwerke - höhenverstellbar | *Coil-Overs-Adjustable Ride Hight*)																
1.8 TSI, 2.0 TSI, 2.0 TDI, 2.0 TDI BlueTDI	05.08 -	1110	1030	PSS65-15-007-01-22	A, 18, 21, 24, 45, 101, 160			35-70	35-70							T
1.8 TSI, 2.0 TSI, 2.0 TDI, 2.0 TDI BlueTDI	03.05 -	1170	1030	PSS65-15-007-02-22	A, 18, 21, 24, 45, 101, 160			35-70	35-70							T
PASSAT Variant																
Pro-Kit (Performance Fahrwerksfedern | *Performance Springs*)																
1.4 TSI	11.14 -	985	1220	E10-85-042-01-22	A, 18, 20			30-35	25					F11-15-021-01-VA	F11-15-007-04-HA	T
2.0 TDI	11.14 -	1100	1220	E10-85-042-02-22	A, 18, 20			30-35	25					F11-85-041-01-VA	F11-15-007-04-HA	T
1.6 TDI, 2.0 TDI	11.14 -	1070	1220	E10-85-041-04-22	A, 18, 20			30-35	25					F11-15-021-02-VA	F11-15-007-04-HA	T
PASSAT Variant (3B5)																
Pro-Kit (Performance Fahrwerksfedern | *Performance Springs*)																
1.6, 1.8, 1.8 T	06.97 - 11.00	1020	1080	E8556-140	A, 18, 20			30	30					F1531001	F1558002	T
1.8, 1.8 T, 1.9 TDI, 2.3 VR5	06.97 - 11.00	1090	1080	E8557-140	A, 18, 20			30	30					F1532001	F1558002	T
1.8 Syncro/4motion, 1.9 TDI 4motion, 1.9 TDI Syncro/4motion, 2.0 4motion, 2.3 VR5 Syncro/4motion	06.97 - 11.00	1090	1190	E8565-140	A, 18			30	30					F1532001	F1561002	T
2.8 Syncro, 2.8 V6 Syncro/4motion	05.97 - 11.00	1140	1190	E8566-140	A, 18			30	30					F1541001	F1561002	T
2.5 TDI	07.98 - 11.00	1190	1080	E8585-140	A, 18, 20			30	30					F1558001	F1558002	T
2.5 TDI Syncro/4motion	12.98 - 11.00	1200	1190	E10-85-002-02-22	A, 18			30	30					F1558001	F1561002	T
Anti-Roll-Kit (Performance Stabilisatoren | *Performance Sway Bars*)																
1.6, 1.8, 1.8 T, 2.3 V5, 2.8 V6, 1.9 TDI, 2.5 TDI	06.97 - 11.00			E1531-310	A, 18, 20, 22, 45					32		2-fach verstellbar *2-way adjustable*		AS1531310VA		T
1.8 4Motion, 2.0 4Motion, 2.3 V5 4Motion, 2.8 V6 4Motion, 1.9 TDI 4Motion, 2.5 TDI 4Motion	05.97 - 11.00			E1531-310	A, 18, 22, 45					32		2-fach verstellbar *2-way adjustable*		AS1531310VA		T
B12 Pro-Kit (Performance Komplettfahrwerke | *Performance Springs+Shocks*)																
1.6, 1.8, 1.8 T	06.97 - 11.00	1020	1080	E90-85-002-04-22	A, 18, 20, 74, 78, 87, 103, 161			30	30					F1531001	F1558002	T
1.8, 1.8 T, 1.9 TDI, 2.3 VR5	06.97 - 11.00	1090	1080	E90-85-002-05-22	A, 18, 20, 74, 78, 87, 105, 161			30	30					F1532001	F1558002	T

VOLKSWAGEN

Modell *Model*	Baujahr *Year*	Achslast Vorne kg *Front Axle Load kg*	Achslast Hinten kg *Rear Axle Load kg*	Artikel-Nr. *Part-No.*	Hinweise *Notes*	ab Nachtrag ...xx BE *from suppl. ...xx of type approval*	bis Nachtrag ...xx BE *to suppl. ...xx of type approval*	ca. Tieferl. Vorne mm *ca. Lowering Front mm*	ca. Tieferl. Hinten mm *ca. Lowering Rear mm*	Ø Vorne mm *Ø Front mm*	Ø Hinten mm *Ø Rear mm*	Verstellbarkeit Vorne *Adjustable Front*	Verstellbarkeit Hinten *Adjustable Rear*	Ersatzteilbez. Vorne *Spare Part Marking Front*	Ersatzteilbez. Hinten *Spare Part Marking Rear*	Gutachten *Homologation*
PASSAT Variant (3B5)																
B12 Pro-Kit (Performance Komplettfahrwerke | *Performance Springs+Shocks*)																
1.8 Syncro/4motion, 1.9 TDI Syncro/4motion, 2.3 VR5 Syncro/4motion	12.99 - 11.00	1090	1190	E90-85-002-07-22	A, 18, 78, 87, 133, 161			30	30					F1532001	F1561002	T
1.9 TDI 4motion, 2.0 4motion	12.99 - 11.00	1090	1190	E90-85-002-07-22	A, 18, 49, 78, 161			30	30					F1532001	F1561002	T
2.8 V6 Syncro/4motion	12.99 - 11.00	1140	1190	E90-85-002-08-22	A, 18, 78, 87, 133, 161			30	30					F1541001	F1561002	T
2.5 TDI	07.98 - 11.00	1190	1080	E90-85-002-06-22	A, 18, 20, 74, 78, 87, 105, 161			30	30					F1558001	F1558002	T
2.5 TDI Syncro/4motion	12.99 - 11.00	1200	1190	E90-85-002-09-22	A, 18, 78, 87, 133, 161			30	30					F1558001	F1561002	T
Pro-Street-S (Gewindefahrwerke - höhenverstellbar | *Coil-Overs-Adjustable Ride Hight*)																
1.6, 1.8, 1.8 T, 1.9 TDI, 2.0, 2.3 VR5, 2.5 TDI, 2.8 V6	06.97 - 11.00	1100	1080	PSS65-85-002-01-22	A, 18, 20, 24, 25, 45, 160			40-75	40-75							T
1.6, 1.8, 1.8 T, 1.9 TDI, 2.0, 2.3 VR5, 2.5 TDI, 2.8 V6	06.97 - 11.00	1200	1080	PSS65-85-002-02-22	A, 18, 20, 24, 25, 45, 160			40-75	40-75							T
1.8 4Motion, 2.0 4Motion, 2.3 V5 4Motion, 2.8 V6 4Motion, 1.9 TDI 4Motion, 2.5 TDI 4Motion	05.97 - 11.00	1100	1160	PSS65-85-002-03-22	A, 18, 22, 25, 45, 160			40-75	40-75							T
1.8 4Motion, 2.0 4Motion, 2.3 V5 4Motion, 2.8 V6 4Motion, 1.9 TDI 4Motion, 2.5 TDI 4Motion	05.97 - 11.00	1200	1160	PSS65-15-005-03-22	A, 18, 25, 45, 160			40-75	40-75							T
PASSAT Variant (3B6)																
Pro-Kit (Performance Fahrwerksfedern | *Performance Springs*)																
1.6, 1.8 T, 1.8 T 20V, 2.0	11.00 - 08.05	1070	1200	E10-85-002-08-22	A, 18, 20			30	30					F1532001	F1558002	T
1.9 TDI 4motion, 2.0 4motion, 2.3 VR5 4motion	11.00 - 05.05	1090	1190	E8565-140	A, 18			30	30					F1532001	F1561002	T
2.8 4motion	11.00 - 05.05	1140	1190	E8566-140	A, 18			30	30					F1541001	F1561002	T
1.8 T, 1.8 T 20V, 1.9 TDI, 2.0 TDI, 2.3 VR5	11.00 - 08.05	1175	1200	E10-85-002-09-22	A, 18, 20			30	30					F1541001	F1558002	T
2.5 TDI 4motion	11.00 - 05.05	1200	1190	E10-85-002-02-22	A, 18			30	30					F1558001	F1561002	T
2.3 VR5, 2.5 TDI	11.00 - 05.05	1250	1200	E10-85-002-10-22	A, 18, 20			30	30					F1558001	F1558002	T
Anti-Roll-Kit (Performance Stabilisatoren | *Performance Sway Bars*)																
1.6, 1.8 T, 2.0, 2.3 V5, 2.8 V6, 1.9 TDI, 2.0 TDI, 2.5 TDI	11.00 - 08.05			E1531-310	A, 18, 20, 22, 45					32		2-fach verstellbar *2-way adjustable*		AS1531310VA		T
2.0 4Motion, 2.3 V5 4Motion, 2.8 V6 4Motion, 1.9 TDI 4Motion, 2.5 TDI 4Motion	11.00 - 08.05			E1531-310	A, 18, 22, 45					32		2-fach verstellbar *2-way adjustable*		AS1531310VA		T
B12 Pro-Kit (Performance Komplettfahrwerke | *Performance Springs+Shocks*)																
1.6, 1.8 T, 1.8 T 20V, 2.0	11.00 - 08.05	1070	1200	E90-85-002-13-22	A, 18, 20, 78, 161			30	30					F1532001	F1558002	T
1.9 TDI 4motion, 2.0 4motion, 2.3 VR5 4motion	11.00 - 05.05	1090	1190	E90-85-002-07-22	A, 18, 78, 87, 133, 161			30	30							T
2.8 4motion	11.00 - 05.05	1140	1190	E90-85-002-08-22	A, 18, 49, 78, 133, 161			30	30							T
1.8 T, 1.8 T 20V, 1.9 TDI, 2.0 TDI, 2.3 VR5	11.00 - 08.05	1175	1200	E90-85-002-14-22	A, 18, 20, 78, 133, 161			30	30					F1541001	F1558002	T
2.5 TDI 4motion	11.00 - 05.05	1200	1190	E90-85-002-09-22	A, 18, 49, 78, 133, 161			30	30							T
2.3 VR5, 2.5 TDI	11.00 - 05.05	1250	1200	E90-85-002-15-22	A, 18, 20, 78, 133, 161			30	30					F1558001	F1558002	T
Pro-Street-S (Gewindefahrwerke - höhenverstellbar | *Coil-Overs-Adjustable Ride Hight*)																
1.6, 1.8 T, 1.8 T 20V, 1.9 TDI, 2.0, 2.0 TDI, 2.3 VR5, 2.5 TDI	11.00 - 08.05	1100	1080	PSS65-85-002-01-22	A, 18, 20, 24, 25, 45, 160			40-75	40-75							T
1.8 4motion, 1.9 TDI 4motion, 2.0 4motion, 2.3 VR5 4motion, 2.5 TDI 4motion, 2.8 4motion	11.00 - 05.05	1100	1160	PSS65-85-002-03-22	A, 18, 22, 25, 45, 160			40-75	40-75							T
1.6, 1.8 T, 1.8 T 20V, 1.9 TDI, 2.0, 2.0 TDI, 2.3 VR5, 2.5 TDI	11.00 - 08.05	1200	1080	PSS65-85-002-02-22	A, 18, 20, 24, 25, 45, 160			40-75	40-75							T
1.8 4motion, 1.9 TDI 4motion, 2.0 4motion, 2.3 VR5 4motion, 2.5 TDI 4motion, 2.8 4motion	11.00 - 05.05	1200	1160	PSS65-15-005-03-22	A, 18, 25, 45, 160			40-75	40-75							T
PASSAT Variant (3C5)																
Pro-Kit (Performance Fahrwerksfedern | *Performance Springs*)																
1.4 TSI, 1.6, 1.6 FSI, 2.0 FSI	08.05 -	1070	1160	E10-85-016-03-22	A, 18, 20		36	30	30					F11-15-007-02-VA	F11-85-012-01-HA	T
1.4 TSI, 1.8 TSI, 2.0 FSI, 2.0 TSI, 3.6 FSI, 1.6 TDI, 1.9 TDI, 2.0 TDI, 2.0 TDI 16V, 2.0 BlueTDI	08.05 -	1180	1160	E10-85-016-04-22	A, 18, 20		36	30	30					F11-15-007-03-VA	F11-85-012-01-HA	T
2.0 FSI 4motion, 3.2 FSI 4motion, 3.6 FSI 4motion, 2.0 TDI 4motion, 2.0 TDI 16V 4motion	08.05 -	1180	1230	E10-85-016-10-22	A, 18		36	30	30					F11-15-007-03-VA	F11-85-016-10-HA	T
Anti-Roll-Kit (Performance Stabilisatoren | *Performance Sway Bars*)																
1.4 TSI, 1.6, 1.6 FSI, 1.6 TDI, 1.8 TSI, 1.9 TDI, 2.0 BlueTDI, 2.0 FSI, 2.0 TDI, 2.0 TDI 16V	08.05 -			E40-85-014-06-11	A, 18, 20, 22, 45					26	23	2-fach verstellbar *2-way adjustable*	2-fach verstellbar *2-way adjustable*	AS41-85-014-01-VA	AS41-85-014-01-HA	T
Pro-Tronic (Elektronische Performance Fahrwerksmodule | *Electronic Performance Suspension Moduls*)																
Alle Motorisierungen / *all motorisation*	08.05 -			AM65-85-022-01-22	A, 175											
B12 Pro-Kit (Performance Komplettfahrwerke | *Performance Springs+Shocks*)																
1.4 TSI, 1.6, 1.6 FSI, 2.0 FSI	08.05 -	1040	1130	E90-85-016-03-22	A, 18, 20, 34, 78, 101, 161		36	30	30					F11-15-007-02-VA	F11-85-012-01-HA	T
1.4 TSI, 1.8 TSI, 2.0 FSI, 2.0 TSI, 3.6 FSI, 1.6 TDI, 1.9 TDI, 2.0 TDI, 2.0 TDI 16V, 2.0 BlueTDI	08.05 -	1180	1130	E90-85-016-04-22	A, 18, 20, 34, 78, 101, 161		36	30	30					F11-15-007-03-VA	F11-85-012-01-HA	T
2.0 FSI 4motion, 3.2 FSI 4motion, 3.6 FSI 4motion, 2.0 TDI 4motion, 2.0 TDI 16V 4motion	08.05 -	1180	1230	E90-85-016-10-22	A, 18, 34, 78, 101, 161		36	30	30					F11-15-007-03-VA	F11-85-016-10-HA	T
Pro-Street-S (Gewindefahrwerke - höhenverstellbar | *Coil-Overs-Adjustable Ride Hight*)																
1.4 TSI, 1.6, 1.6 FSI, 2.0 FSI, 1.4 TSI	08.05 -	1105	1230	PSS65-85-016-03-22	A, 18, 24, 45, 160			35-70	35-70							T
1.4 TSI, 1.8 TSI, 2.0 FSI, 2.0 TSI, 3.6 FSI, 1.6 TDI, 1.9 TDI, 2.0 TDI, 2.0 TDI 16V, 2.0 BlueTDI, 2.0 FSI 4motion, 3.2 FSI 4motion, 3.6 FSI 4motion, 2.0 TDI 4motion, 2.0 TDI 16V 4motion	08.05 -	1180	1230	PSS65-85-016-04-22	A, 18, 24, 45, 160			35-70	35-70							T

VOLKSWAGEN

Modell *Model*	Baujahr *Year*	Achslast Vorne kg *Front Axle Load kg*	Achslast Hinten kg *Rear Axle Load kg*	Artikel-Nr. *Part-No.*	Hinweise *Notes*	ab Nachtrag ...xx BE *from suppl. ...xx of type approval*	bis Nachtrag ...xx BE *to suppl. ...xx of type approval*	ca. Tieferl. Vorne mm *ca. Lowering Front mm*	ca. Tieferl. Hinten mm *ca. Lowering Rear mm*	Ø Vorne mm *Ø Front mm*	Ø Hinten mm *Ø Rear mm*	Verstellbarkeit Vorne *Adjustable Front*	Verstellbarkeit Hinten *Adjustable Rear*	Ersatzteilbez. Vorne *Spare Part Marking Front*	Ersatzteilbez. Hinten *Spare Part Marking Rear*	Gutachten *Homologation*
PASSAT Variant (3G5)																
Pro-Kit (Performance Fahrwerksfedern | *Performance Springs*)																
1.4 TSI	11.14 -	985	1220	E10-85-042-01-22	A, 18, 20	37		30-35	25					F11-15-021-01-VA	F11-15-007-04-HA	T
2.0 TSI 4motion, 2.0 TDI, 2.0 TDI 4motion	11.14 -	1100	1220	E10-85-042-02-22	A, 18	37		30-35	25					F11-85-041-01-VA	F11-15-007-04-HA	T
2.0 TSI 4motion, 2.0 TDI 4motion	08.14 -	1160	1220	E10-85-042-04-22	A, 18	37		30-35	30					F11-85-042-03-FA	F11-85-016-10-HA	T
1.4 TSI, 1.4 TSI 4motion, 1.8 TSI, 2.0 TSI, 1.6 TDI, 2.0 TDI	08.14 -	1070	1220	E10-85-041-04-22	A, 18	37		30-35	25					F11-15-021-02-VA	F11-15-007-04-HA	T
PASSAT Variant (365)																
Pro-Kit (Performance Fahrwerksfedern | *Performance Springs*)																
1.4 TSI, 1.4 TSI MultiFuel	08.10 -	1070	1160	E10-85-016-03-22	A, 18, 20		36	30	25					F11-15-007-02-VA	F11-85-012-01-HA	T
1.6 TDI, 1.8 TSI, 2.0 TDI, 2.0 TSI	08.10 -	1180	1160	E10-85-016-04-22	A, 18, 20		36	30	25					F11-15-007-03-VA	F11-85-012-01-HA	T
2.0 TDI 4motion, 2.0 TSI 4motion	08.10 -	1180	1230	E10-85-016-10-22	A, 18		36	30	25					F11-15-007-03-VA	F11-85-016-10-HA	T
3.6 FSI 4motion	08.10 -	1180	1230	E10-85-016-10-22	A, 18		36	10	5					F11-15-007-03-VA	F11-85-016-10-HA	T
Anti-Roll-Kit (Performance Stabilisatoren | *Performance Sway Bars*)																
1.4 TSI, 1.4 TSI MultiFuel, 1.6 TDI, 1.8 TSI, 2.0 TDI, 2.0 TSI	08.10 -			E40-85-014-06-11	A, 18, 20, 22, 45					26	23	2-fach verstellbar *2-way adjustable*	2-fach verstellbar *2-way adjustable*	AS41-85-014-01-VA	AS41-85-014-01-HA	T
B12 Pro-Kit (Performance Komplettfahrwerke | *Performance Springs+Shocks*)																
1.4 TSI, 1.4 TSI Multifuel	08.10 -	1070	1130	E90-85-016-03-22	A, 18, 20, 21, 34, 78, 161			30	30							T
1.8 TSI, 2.0 TSI, 1.6 TDI, 2.0 TDI	08.10 -	1180	1130	E90-85-016-04-22	A, 18, 20, 21, 34, 78, 161			30	30							T
2.0 TSI 4motion, 2.0 TDI 4motion	08.10 -	1180	1230	E90-85-016-10-22	A, 18, 21, 34, 78, 161			30	30							T
Pro-Street-S (Gewindefahrwerke - höhenverstellbar | *Coil-Overs-Adjustable Ride Hight*)																
1.4 TSI, 1.4 TSI MultiFuel	08.10 -	1060	1230	PSS65-85-016-03-22	A, 18, 24, 45, 160			35-70	35-70							T
1.6 TDI, 1.8 TSI, 2.0 TDI, 2.0 TDI 4motion, 2.0 TSI, 3.6 FSI 4motion	08.10 -	1180	1230	PSS65-85-016-04-22	A, 18, 24, 45, 160			35-70	35-70							T
POLO (86C, 80)																
Pro-Kit (Performance Fahrwerksfedern | *Performance Springs*)																
1.0, 1.0 KAT, 1.3, 1.3 KAT, 1.4 D *1.0, 1.0 CAT, 1.3, 1.3 CAT, 1.4 D*	08.85 - 09.94	640	630	E8517-140	A, 18, 20			35-40	30-35					F8517001	F8517002	T
B12 Pro-Kit (Performance Komplettfahrwerke | *Performance Springs+Shocks*)																
0.9, 1.0, 1.0 KAT, 1.1, 1.3, 1.3 D, 1.3 KAT, 1.4 D *0.9, 1.0, 1.0 CAT, 1.1, 1.3, 1.3 CAT, 1.3 D, 1.4 D*	10.81 - 09.94	640	630	E90-85-036-01-22	A, 18, 20, 78, 161			30-40	30-35					F8517001	F8517002	T
POLO (6N1)																
Pro-Kit (Performance Fahrwerksfedern | *Performance Springs*)																
1.7 SDI, 100 1.4 16V, 120 1.6 16V GTI, 45 1.0, 50 1.0, 55 1.3, 55 1.4, 60 1.4, 60 1.7 SDI, 64 1.9 D, 64 1.9 SDI, 75 1.6	10.94 - 10.99	820	750	E8546-140	A, 18, 20			30	30					F8546001	F8546002	T
Sportline (Performance Fahrwerksfedern Sport | *Sport Performance Springs*)																
1.7 SDI, 100 1.4 16V, 120 1.6 16V GTI, 45 1.0, 50 1.0, 55 1.3, 55 1.4, 60 1.4, 60 1.7 SDI, 64 1.9 D, 64 1.9 SDI, 75 1.6	10.94 - 10.99	800	750	E20-85-004-01-22	A, 20			45-50	30-35					F21-85-003-01-VA	F21-85-004-01-HA	T
B12 Pro-Kit (Performance Komplettfahrwerke | *Performance Springs+Shocks*)																
1.7 SDI, 100 1.4 16V, 120 1.6 16V GTI, 45 1.0, 50 1.0, 55 1.3, 55 1.4, 60 1.4, 60 1.7 SDI, 64 1.9 D, 64 1.9 SDI, 75 1.6	10.94 - 10.99	820	750	E90-85-004-01-22	A, 18, 20, 78, 161			30	30					F8546001	F8546002	T
B12 Sportline (Performance Komplettfahrwerke Sport | *Sport Performance Springs+Shocks*)																
1.7 SDI, 100 1.4 16V, 120 1.6 16V GTI, 45 1.0, 50 1.0, 55 1.3, 55 1.4, 60 1.4, 60 1.7 SDI, 64 1.9 D, 64 1.9 SDI, 75 1.6	10.94 - 10.99	800	750	E95-85-004-01-22	A, 18, 20, 78, 161			45-50	30-35					F21-85-003-01-VA	F21-85-004-01-HA	T
POLO (6N2)																
Pro-Kit (Performance Fahrwerksfedern | *Performance Springs*)																
1.0, 1.4, 1.4 16V	10.99 - 09.01	800	780	E8595-140	A, 18, 20			30	30					F11-81-001-01-VA	F8594002	T
1.4, 1.4 16V, 1.4 TDI, 1.6 16V GTI, 1.7 SDI, 1.9 D, 1.9 SDI	10.99 - 09.01	850	780	E8594-140	A, 18, 20			30	30					F8594001	F8594002	T
Sportline (Performance Fahrwerksfedern Sport | *Sport Performance Springs*)																
1.0, 1.4, 1.4 16V, 1.6 16V GTI	10.99 - 09.01	830	780	E20-85-004-02-22	A, 20			45-50	30-35					F21-85-004-02-VA	F21-85-004-02-HA	T
B12 Pro-Kit (Performance Komplettfahrwerke | *Performance Springs+Shocks*)																
1.0, 1.2, 1.4, 1.4 16V	10.99 - 10.01	800	780	E90-85-004-02-22	A, 18, 20, 78, 161			30	30					F11-81-001-01-VA	F8594002	T
1.4, 1.4 16V, 1.4 TDI, 1.6 16V GTI, 1.7 SDI, 1.9 D, 1.9 SDI	10.99 - 09.01	850	780	E90-85-004-03-22	A, 18, 20, 78, 161			30	30					F8594001	F8594002	T
B12 Sportline (Performance Komplettfahrwerke Sport | *Sport Performance Springs+Shocks*)																
1.0 Schaltgetriebe, 1.2 Schaltgetriebe, 1.4 16V Schaltgetriebe, 1.4 Schaltgetriebe, 1.6 16V GTI Schaltgetriebe *1.0 manual transmission, 1.2 manual transmission, 1.4 16V manual transmission, 1.4 manual transmission, 1.6 16V GTI manual transmission*	10.99 - 10.01	830	780	E95-85-004-02-22	A, 18, 20, 71, 78, 161			45-50	30-35					F21-85-004-02-VA	F21-85-004-02-HA	T
POLO (9N_)																
Pro-Kit (Performance Fahrwerksfedern | *Performance Springs*)																
1.2, 1.2 12V, 1.4, 1.4 16V, 1.4 FSI, 1.6, 1.6 16V, 1.6 Total Flex	10.01 - 11.09	870	840	E10-85-008-01-22	A, 18, 20, 58			30	30					F11-85-008-01-VA	F11-85-008-01-HA	T
1.8 GTI, 1.8 GTi Cup Edition	09.05 - 11.09	960	840	E10-85-008-02-22	A, 18, 20			20	20					F11-85-008-02-VA	F11-85-008-01-HA	T
1.4 TDI, 1.9 SDI, 1.9 TDI	10.01 - 11.09	960	840	E10-85-008-02-22	A, 18, 20, 58			30	30					F11-85-008-02-VA	F11-85-008-01-HA	T
Sportline (Performance Fahrwerksfedern Sport | *Sport Performance Springs*)																
1.2, 1.2 12V, 1.4, 1.4 16V, 1.4 FSI, 1.6, 1.6 16V, 1.6 Total Flex	10.01 - 11.09	870	800	E20-85-008-01-22	A, 20, 58			45-50	30-35					F21-85-008-01-VA	F21-85-008-01-HA	T
Anti-Roll-Kit (Performance Stabilisatoren | *Performance Sway Bars*)																
1.2, 1.2 12V, 1.4, 1.4 16V, 1.4 FSI, 1.4 TDI, 1.6, 1.6 16V, 1.6 Total Flex, 1.9 SDI, 1.9 TDI	10.01 - 11.09			E40-85-008-01-10	A, 18, 20, 22, 45					22		nicht verstellbar *not adjustable*		AS41-85-008-01-VA		T

VOLKSWAGEN

Modell *Model*	Baujahr *Year*	Achslast Vorne kg *Front Axle Load kg*	Achslast Hinten kg *Rear Axle Load kg*	Artikel-Nr. *Part-No.*	Hinweise *Notes*	ab Nachtrag ...xx BE *from suppl. ...xx of type approval*	bis Nachtrag ...xx BE *to suppl. ...xx of type approval*	ca. Tieferl. Vorne mm *ca. Lowering Front mm*	ca. Tieferl. Hinten mm *ca. Lowering Rear mm*	Ø Vorne mm *Ø Front mm*	Ø Hinten mm *Ø Rear mm*	Verstellbarkeit Vorne *Adjustable Front*	Verstellbarkeit Hinten *Adjustable Rear*	Ersatzteilbez. Vorne *Spare Part Marking Front*	Ersatzteilbez. Hinten *Spare Part Marking Rear*	Gutachten *Homologation*
POLO (9N_)																
B12 Pro-Kit (Performance Komplettfahrwerke | *Performance Springs+Shocks*)																
1.2 12V Schaltgetriebe, 1.2 Schaltgetriebe, 1.4 16V Schaltgetriebe, 1.4 FSI Schaltgetriebe, 1.6 16V Schaltgetriebe, 1.6 Schaltgetriebe, 1.6 Total Flex Schaltgetriebe *1.2 12V manual transmission, 1.2 manual transmission, 1.4 16V manual transmission, 1.4 FSI manual transmission, 1.6 16V manual transmission, 1.6 Total Flex manual transmission, 1.6 manual transmission*	10.01 - 11.09	870	840	E90-85-008-01-22	A, 18, 20, 58, 78, 127, 161			30	30					F11-85-008-01-VA	F11-85-008-01-HA	T
1.4 TDI	10.01 - 11.09	960	840	E90-85-008-02-22	A, 18, 20, 78, 127, 161			30	30					F11-85-008-02-VA	F11-85-008-01-HA	T
1.8 GTI, 1.8 GTi Cup Edition	09.05 - 11.09	960	840	E90-85-008-02-22	A, 18, 20, 78, 161			20	20					F11-85-008-02-VA	F11-85-008-01-HA	T
1.9 SDI, 1.9 TDI	10.01 - 11.09	960	840	E90-85-008-02-22	A, 18, 20, 58, 78, 127, 161			30	30					F11-85-008-02-VA	F11-85-008-01-HA	T
B12 Sportline (Performance Komplettfahrwerke Sport | *Sport Performance Springs+Shocks*)																
1.2 12V Schaltgetriebe, 1.2 Schaltgetriebe, 1.4 16V Schaltgetriebe, 1.4 FSI Schaltgetriebe, 1.6 16V Schaltgetriebe, 1.6 Schaltgetriebe, 1.6 Total Flex Schaltgetriebe *1.2 12V manual transmission, 1.2 manual transmission, 1.4 16V manual transmission, 1.4 FSI manual transmission, 1.6 16V manual transmission, 1.6 Total Flex manual transmission, 1.6 manual transmission*	10.01 - 11.09	870	800	E95-85-008-01-22	A, 18, 20, 58, 71, 78, 127, 161			45-50	30-35					F21-85-008-01-VA	F21-85-008-01-HA	T
Pro-Street-S (Gewindefahrwerke - höhenverstellbar | *Coil-Overs-Adjustable Ride Hight*)																
1.2, 1.2 12V, 1.4, 1.4 16V, 1.4 FSI, 1.4 TDI, 1.6, 1.6 16V, 1.6 Total Flex, 1.9 SDI, 1.9 TDI	10.01 - 11.09	960	840	PSS65-85-008-01-22	A, 24, 25, 45, 160			35-65	35-65							T
1.8 GTI, 1.8 GTi Cup Edition	09.05 - 11.09	960	840	PSS65-85-008-01-22	A, 24, 25, 45, 160			10-40	15-45							T
POLO (6R, 6C)																
Pro-Kit (Performance Fahrwerksfedern | *Performance Springs*)																
1.0, 1.0 TSI, 1.2, 1.4, 1.2 TSI, 1.2 TSI 16V	06.09 -	860	840	E10-85-024-01-22	A, 18, 20			25	30					F11-81-010-04-VA	F11-81-010-04-HA	T
1.0 TSI, 1.2 TSI, 1.2 TSI 16V, 1.2 TDI, 1.4 TSI, 1.6, 1.4 TDI, 1.6 TDI	06.09 -	960	840	E10-85-024-02-22	A, 18, 20			25	30					F11-81-010-05-VA	F11-81-010-04-HA	T
1.4 GTI, 1.8 GTI	07.10 -	960	840	E10-85-024-02-22	A, 18, 20			15	20					F11-81-010-05-VA	F11-81-010-04-HA	T
2.0 R WRC	08.13 -	960	840	E10-85-024-02-22	A, 18, 20			15	15					F11-81-010-05-VA	F11-81-010-04-HA	T
Anti-Roll-Kit (Performance Stabilisatoren | *Performance Sway Bars*)																
1.0, 1.0 TSI, 1.2, 1.2 TSI, 1.2 TDI, 1.4, GTI 1.4 TSI, 1.4 TDI, 1.6 TDI, 2.0 R WRC	06.09 -			E40-85-008-01-10	A, 18, 20, 22, 45					22		nicht verstellbar *not adjustable*		AS41-85-008-01-VA		T
Pro-Tronic (Elektronische Performance Fahrwerksmodule | *Electronic Performance Suspension Moduls*)																
Alle Motorisierungen / *all motorisation*	06.09 -			AM65-85-024-01-22	A, 175, 220											
B12 Pro-Kit (Performance Komplettfahrwerke | *Performance Springs+Shocks*)																
1.0, 1.0 TSI, 1.2, 1.4, 1.2 TSI, 1.2 TSI 16V	06.09 -	860	840	E90-85-024-01-22	A, 18, 20, 78, 161			25	30					F11-81-010-04-VA	F11-81-010-04-HA	T
1.4 GTI	07.10 -	960	840	E90-85-024-02-22	A, 18, 20, 78, 161			15	20					F11-81-010-05-VA	F11-81-010-04-HA	T
1.0 TSI, 1.2 TSI, 1.2 TSI 16V, 1.2 TDI, 1.4 TSI, 1.6, 1.4 TDI, 1.6 TDI	06.09 -	960	840	E90-85-024-02-22	A, 18, 20, 78, 161			25	30					F11-81-010-05-VA	F11-81-010-04-HA	T
Pro-Street-S (Gewindefahrwerke - höhenverstellbar | *Coil-Overs-Adjustable Ride Hight*)																
1.0, 1.0 TSI, 1.2, 1.4, 1.2 TSI, 1.2 TSI 16V	06.09 -	860	770	PSS65-81-010-01-22	A, 21, 24, 25, 45, 160			20-50	40-65							T
1.0 TSI, 1.2 TSI, 1.2 TSI 16V, 1.2 TDI, 1.4 TSI, 1.4 GTI, 1.6, 1.4 TDI, 1.6 TDI	06.09 -	960	770	PSS65-81-010-02-22	A, 21, 24, 25, 45, 160			20-50	40-65							T
1.0, 1.0 TSI, 1.2, 1.4, 1.2 TSI, 1.2 TSI 16V	06.09 -	860	770	PSS65-81-010-03-22	A, 24, 25, 45, 160, 221			20-50	40-65							T
1.0 TSI, 1.2 TSI, 1.2 TSI 16V, 1.2 TDI, 1.4 TSI, 1.4 GTI, 1.6, 1.4 TDI, 1.6 TDI	06.09 -	960	770	PSS65-81-010-04-22	A, 24, 25, 45, 160, 221			20-50	40-65							T
POLO CLASSIC (86C, 80)																
Pro-Kit (Performance Fahrwerksfedern | *Performance Springs*)																
1.0, 1.3 KAT, 1.4 D *1.0, 1.3 CAT, 1.4 D*	01.85 - 09.94	640	630	E8517-140	A, 18, 20			35-40	30-35					F8517001	F8517002	T
B12 Pro-Kit (Performance Komplettfahrwerke | *Performance Springs+Shocks*)																
1.0, 1.3, 1.3 D, 1.3 KAT, 1.4 D *1.0, 1.3, 1.3 CAT, 1.3 D, 1.4 D*	01.85 - 09.94	640	630	E90-85-036-01-22	A, 18, 20, 78, 161			30-40	30-35					F8517001	F8517002	T
POLO CLASSIC (6KV2)																
Pro-Kit (Performance Fahrwerksfedern | *Performance Springs*)																
1.4, 1.6, 1.8, 2.0	11.95 - 07.02	865	790	E8551-140	A, 18, 20			30	30					F8502001	F8106002	T
1.7 SDI, 1.9 D, 1.9 SDI, 1.9 TDI	12.95 - 09.01	900	790	E8586-140	A, 18, 20			30	30					F8530001	F8106002	T
B12 Pro-Kit (Performance Komplettfahrwerke | *Performance Springs+Shocks*)																
1.4, 1.6, 1.8	11.95 - 09.01	865	790	E90-85-034-01-22	A, 18, 20, 78, 161			30	30					F8502001	F8106002	T
1.7 SDI, 1.9 D, 1.9 SDI, 1.9 TDI	12.95 - 09.01	900	790	E90-85-034-02-22	A, 18, 20, 78, 161			30	30					F8530001	F8106002	T
POLO Coupe (86C, 80)																
Pro-Kit (Performance Fahrwerksfedern | *Performance Springs*)																
1.0, 1.0 KAT, 1.3, 1.3 D, 1.3 G40, 1.3 KAT, 1.4 D *1.0, 1.0 CAT, 1.3, 1.3 CAT, 1.3 D, 1.3 G40, 1.4 D*	08.85 - 09.94	640	630	E8517-140	A, 18, 20			35-40	30-35					F8517001	F8517002	T
B12 Pro-Kit (Performance Komplettfahrwerke | *Performance Springs+Shocks*)																
1.0, 1.0 KAT, 1.1, 1.3, 1.3 D, 1.3 G40, 1.3 KAT, 1.4 D *1.0, 1.0 CAT, 1.1, 1.3, 1.3 CAT, 1.3 D, 1.3 G40, 1.4 D*	10.81 - 09.94	640	630	E90-85-036-01-22	A, 18, 20, 78, 161			30-40	30-35					F8517001	F8517002	T
POLO Stufenheck (9A4) ***POLO Saloon (9A4)***																
Pro-Kit (Performance Fahrwerksfedern | *Performance Springs*)																
1.4, 1.4 FSI	07.03 -	870	840	E10-85-008-01-22	A, 18, 20			30	35					F11-85-008-01-VA	F11-85-008-01-HA	T
1.4 TDI, 1.9 SDI	09.02 -	960	840	E10-85-008-02-22	A, 18, 20			30	35					F11-85-008-02-VA	F11-85-008-01-HA	T

VOLKSWAGEN

Modell	Baujahr	Achslast Vorne kg	Achslast Hinten kg	Artikel-Nr.	Hinweise	ab Nachtrag ...xx BE	bis Nachtrag ...xx BE	ca. Tieferl. Vorne mm	ca. Tieferl. Hinten mm	Ø Vorne mm	Ø Hinten mm	Verstellbarkeit Vorne	Verstellbarkeit Hinten	Ersatzteilbez. Vorne	Ersatzteilbez. Hinten	Gutachten
Model	*Year*	*Front Axle Load kg*	*Rear Axle Load kg*	*Part-No.*	*Notes*	*from suppl. ...xx of type approval*	*to suppl. ...xx of type approval*	*ca. Lowering Front mm*	*ca. Lowering Rear mm*	*Ø Front mm*	*Ø Rear mm*	*Adjustable Front*	*Adjustable Rear*	*Spare Part Marking Front*	*Spare Part Marking Rear*	*Homologation*
POLO Stufenheck (9A4)																
POLO Saloon (9A4)																
B12 Pro-Kit (Performance Komplettfahrwerke | *Performance Springs+Shocks*)																
1.4, 1.4 FSI	07.03 -	870	840	E90-85-008-01-22	A, 18, 20, 71, 78, 161			30	30					F11-85-008-01-VA	F11-85-008-01-HA	T
1.4 TDI, 1.9 SDI	09.02 -	960	840	E90-85-008-02-22	A, 18, 20, 78, 161			30	30					F11-85-008-02-VA	F11-85-008-01-HA	T
Pro-Street-S (Gewindefahrwerke - höhenverstellbar | *Coil-Overs-Adjustable Ride Hight*)																
1.4, 1.4 FSI, 1.4 TDI, 1.9 SDI	09.02 -	960	840	PSS65-85-008-01-22	A, 24, 25, 45, 160			35-65	35-65							T
POLO Stufenheck																
POLO Saloon																
Pro-Kit (Performance Fahrwerksfedern | *Performance Springs*)																
1.6	05.10 -	860	840	E10-85-024-01-22	A, 18, 20			25	30					F11-81-010-04-VA	F11-81-010-04-HA	T
1.6	05.10 -	960	840	E10-85-024-02-22	A, 18, 20			25	30					F11-81-010-05-VA	F11-81-010-04-HA	T
Anti-Roll-Kit (Performance Stabilisatoren | *Performance Sway Bars*)																
1.6	05.10 -			E40-85-008-01-10	A, 18, 20, 22, 45					22		nicht verstellbar *not adjustable*		AS41-85-008-01-VA		T
B12 Pro-Kit (Performance Komplettfahrwerke | *Performance Springs+Shocks*)																
1.6	05.10 -	860	820	E90-85-024-01-22	A, 18, 20, 78, 161			25	30					F11-81-010-04-VA	F11-81-010-04-HA	T
1.6	05.10 -	940	820	E90-85-024-02-22	A, 18, 20, 78, 161			25	30					F11-81-010-05-VA	F11-81-010-04-HA	T
Pro-Street-S (Gewindefahrwerke - höhenverstellbar | *Coil-Overs-Adjustable Ride Hight*)																
1.6	05.10 -	860	770	PSS65-81-010-01-22	A, 24, 25, 45, 160			20-50	40-65							T
1.6	05.10 -	960	770	PSS65-81-010-02-22	A, 24, 25, 45, 160			20-50	40-65							T
SCIROCCO (53)																
Pro-Kit (Performance Fahrwerksfedern | *Performance Springs*)																
1.3, 1.5, 1.6	08.75 - 07.80	785	630	E8501-140	A, 18, 20			30-40	30					F8501101	F8501002	T
B12 Pro-Kit (Performance Komplettfahrwerke | *Performance Springs+Shocks*)																
1.3, 1.5, 1.6	02.74 - 07.80	785	630	E90-85-032-01-22	A, 18, 20, 78, 95, 161			30-40	30					F8501101	F8501002	T
SCIROCCO (53B)																
Pro-Kit (Performance Fahrwerksfedern | *Performance Springs*)																
1.3, 1.5, 1.6, 1.8, 1.8 16V	08.80 - 07.92	785	630	E8501-140	A, 18, 20			30-40	30					F8501101	F8501002	T
B12 Pro-Kit (Performance Komplettfahrwerke | *Performance Springs+Shocks*)																
1.3, 1.5, 1.6, 1.8, 1.8 16V	08.80 - 07.92	785	630	E90-85-032-01-22	A, 18, 20, 78, 95, 161			30-40	30					F8501101	F8501002	T
SCIROCCO (137)																
Pro-Kit (Performance Fahrwerksfedern | *Performance Springs*)																
2.0 R	11.09 -	1050	780	E10-85-021-01-22	A, 18, 20			15	10					F11-79-004-01-VA	F11-15-001-01-HA	T
2.0 R	11.09 -	1050	780	E10-85-021-01-22	A, 18, 20			15	10					F11-79-004-01-VA	F11-15-001-01-HA	T
1.4 TSI, 2.0 TDI, 2.0 TSI	05.08 -	1050	780	E10-85-021-01-22	A, 18, 20			25-30	20					F11-79-004-01-VA	F11-15-001-01-HA	T
2.0 R	11.09 -	1090	780	E10-85-021-05-22	A, 18, 20			15	10					F11-15-007-01-VA	F11-15-001-01-HA	T
2.0 TDI	08.08 -	1090	780	E10-85-021-05-22	A, 18, 20			25-30	20					F11-15-007-01-VA	F11-15-001-01-HA	T
Sportline (Performance Fahrwerksfedern Sport | *Sport Performance Springs*)																
1.4 TSI, 2.0 TDI, 2.0 TSI	05.08 -	1040	770	E20-85-021-01-22	A, 18, 20, 210			35-40	30					F21-15-007-01-VA	F21-85-021-01-HA	E
Anti-Roll-Kit (Performance Stabilisatoren | *Performance Sway Bars*)																
1.4 TSI, 2.0 TDI, 2.0 TSI	05.08 -			E40-85-021-01-11	A, 18, 20, 22, 45					26 Rohr *26 tube*	23 Rohr *23 tube*	2-fach verstellbar *2-way adjustable*	2-fach verstellbar *2-way adjustable*	AS41-85-021-01-VA	AS41-85-021-01-HA	T
Pro-Tronic (Elektronische Performance Fahrwerksmodule | *Electronic Performance Suspension Moduls*)																
Alle Motorisierungen / *all motorisation*	05.08 -			AM65-85-022-01-22	A, 175											
B12 Pro-Kit (Performance Komplettfahrwerke | *Performance Springs+Shocks*)																
1.4 TSI, 2.0 TDI, 2.0 TSI	05.08 -	1050	770	E90-85-021-01-22	A, 18, 20, 34, 78, 101, 161			25-30	20					F11-79-004-01-VA	F11-15-001-01-HA	T
2.0 R	11.09 -	1050	770	E90-85-021-01-22	A, 18, 20, 34, 78, 101, 161			15	10					F11-79-004-01-VA	F11-15-001-01-HA	T
2.0 R	11.09 -	1080	770	E90-85-021-05-22	A, 18, 20, 34, 78, 101, 161			15	10					F11-15-007-01-VA	F11-15-001-01-HA	T
2.0 TDI	11.09 -	1080	770	E90-85-021-05-22	A, 18, 20, 34, 78, 101, 161			25-30	20					F11-15-007-01-VA	F11-15-001-01-HA	T
B12 Sportline (Performance Komplettfahrwerke Sport | *Sport Performance Springs+Shocks*)																
1.4 TSI, 2.0 TDI, 2.0 TSI	05.08 -	1040	770	E90-85-021-01-22	A, 18, 20, 34, 210			35-40	30					F21-15-007-01-VA	F21-85-021-01-HA	E
Pro-Street-S (Gewindefahrwerke - höhenverstellbar | *Coil-Overs-Adjustable Ride Hight*)																
1.4 TSI	05.08 -	1000	770	PSS65-85-021-01-22	A, 18, 45, 160			20-55	20-55							T
2.0 R	11.09 -	1080	770	PSS65-85-021-02-22	A, 18, 45, 160			10-45	10-45							T
1.4 TSI, 2.0 TDI, 2.0 TSI	05.08 -	1080	770	PSS65-85-021-02-22	A, 18, 45, 160			20-55	20-55							T
SHARAN (7M8, 7M9, 7M6)																
Pro-Kit (Performance Fahrwerksfedern | *Performance Springs*)																
1.8 T 20V, 2.0, 2.0 16V	09.95 - 03.10	1240	1355	E8549-140	A, 18, 20			30	30					F8549001	F8549002	T
1.9 TDI, 2.0 TDI, 2.8 V6 24V, 2.8 VR6	09.95 - 03.10	1260	1355	E8552-140	A, 18, 20			30	30					F8552001	F8549002	T
B12 Pro-Kit (Performance Komplettfahrwerke | *Performance Springs+Shocks*)																
1.8 T 20V, 2.0, 2.0 16V	09.95 - 03.10	1240	1355	E90-85-007-01-22	A, 18, 20, 78, 161			30	30					F8549001	F8549002	T
1.9 TDI, 2.8 V6 24V, 2.8 VR6	09.95 - 03.10	1260	1355	E90-85-007-02-22	A, 18, 20, 78, 161			30	30					F8552001	F8549002	T
SHARAN (7N)																
Pro-Kit (Performance Fahrwerksfedern | *Performance Springs*)																
1.4 TSI, 1.8 TSI, 2.0 TDI	05.10 -	1220	1150	E10-85-026-01-22	A, 18, 20, 66			25	25					F11-85-012-02-VA	F11-79-008-01-HA	T
1.4 TSI, 1.8 TSI, 2.0 TSI, 2.0 TDI	05.10 -	1300	1150	E10-85-026-02-22	A, 18, 20, 66			25	25					F11-85-012-03-VA	F11-79-008-01-HA	T
Pro-Tronic (Elektronische Performance Fahrwerksmodule | *Electronic Performance Suspension Moduls*)																
Alle Motorisierungen / *all motorisation*	05.10 -			AM65-85-022-01-22	A, 175											

VOLKSWAGEN

Modell *Model*	Baujahr *Year*	Achslast Vorne kg *Front Axle Load kg*	Achslast Hinten kg *Rear Axle Load kg*	Artikel-Nr. *Part-No.*	Hinweise *Notes*	ab Nachtrag ...xx BE *from suppl. ...xx of type approval*	bis Nachtrag ...xx BE *to suppl. ...xx of type approval*	ca. Tieferl. Vorne mm *ca. Lowering Front mm*	ca. Tieferl. Hinten mm *ca. Lowering Rear mm*	Ø Vorne mm *Ø Front mm*	Ø Hinten mm *Ø Rear mm*	Verstellbarkeit Vorne *Adjustable Front*	Verstellbarkeit Hinten *Adjustable Rear*	Ersatzteilbez. Vorne *Spare Part Marking Front*	Ersatzteilbez. Hinten *Spare Part Marking Rear*	Gutachten *Homologation*
TIGUAN (5N_)																
Pro-Kit (Performance Fahrwerksfedern | *Performance Springs*)																
1.4 TSI, 1.4 TSI 4motion, 2.0 TDI, 2.0 TDI 4motion, 2.0 TFSI 4motion, 2.0 TSI 4motion	09.07 -	1190	1130	E10-85-020-01-22	A, 18, 54			30	30					F11-85-012-02-VA	F11-85-012-01-HA	T
Pro-Lift-Kit (Performance Höherlegung | *Performance Lift Springs*)																
1.4 TSI, 2.0 TFSI, 2.0 TDI	09.07 -	1120	1130	E30-85-020-01-22	A, 18			+30	+30					F31-85-020-01-FA	F31-85-020-01-RA	T
1.4 TSI 4Motion, 2.0 TSI 4Motion, 2.0 TFSI 4Motion, 2.0 TDI 4Motion	09.07 -	1190	1130	E30-85-020-01-22	A, 18			+30	+30					F31-85-020-02-FA	F31-85-020-01-RA	T
TOUAREG (7LA, 7L6, 7L7)																
Pro-Kit (Performance Fahrwerksfedern | *Performance Springs*)																
2.5 R5 TDI, 3.0 TDI, 3.0 V6 TDI, 3.2 V6, 3.6 V6 FSI, 4.2 V8, 4.2 V8 FSI	10.02 - 05.10	1510	1670	E10-85-011-01-22	A, 18			30	30					F11-85-011-01-VA	F11-85-011-01-HA	T
B12 Pro-Kit (Performance Komplettfahrwerke | *Performance Springs+Shocks*)																
2.5 R5 TDI, 3.0 TDI, 3.0 V6 TDI, 3.2 V6, 3.6 V6 FSI, 4.2 V8, 4.2 V8 FSI	10.02 - 05.10	1510	1670	E90-85-011-01-22	A, 18, 76, 78, 161			30	30					F11-85-011-01-VA	F11-85-011-01-HA	T
TOURAN (1T1, 1T2)																
Pro-Kit (Performance Fahrwerksfedern | *Performance Springs*)																
1.6, 1.6 FSI	02.03 - 05.10	1060	1190	E10-85-012-01-22	A, 18, 20, 58			25	25					F11-79-004-02-VA	F11-85-012-01-HA	T
1.4 FSI, 1.4 TSI, 1.9 TDI, 2.0 FSI, 2.0 TDI, 2.0 TDI 16V	02.03 - 05.10	1160	1190	E10-85-012-02-22	A, 18, 20, 58			25	25					F11-85-012-02-VA	F11-85-012-01-HA	T
1.9 TDI, 2.0 TDI, 2.0 TDI 16V	02.03 - 05.10	1200	1190	E10-85-012-03-22	A, 18, 20, 58			25	25					F11-85-012-03-VA	F11-85-012-01-HA	T
Anti-Roll-Kit (Performance Stabilisatoren | *Performance Sway Bars*)																
1.6, 1.6 FSI, 1.9 TDI, 2.0 FSI, 2.0 TDI, 2.0 TDI 16V	02.03 - 05.10			E40-85-014-06-11	A, 18, 20, 22, 45					26	23	2-fach verstellbar *2-way adjustable*	2-fach verstellbar *2-way adjustable*	AS41-85-014-01-VA	AS41-85-014-01-HA	T
B12 Pro-Kit (Performance Komplettfahrwerke | *Performance Springs+Shocks*)																
1.9 TDI Schaltgetriebe *1.9 TDI manual transmission*	02.03 - 05.10	1160	1190	E90-85-012-02-22	A, 18, 20, 78, 161			30	30					F11-85-012-02-VA	F11-85-012-01-HA	T
1.9 TDI, 2.0 TDI, 2.0 TDI 16V	02.03 - 05.10	1200	1190	E90-85-012-03-22	A, 18, 20, 78, 161			30	30					F11-85-012-03-VA	F11-85-012-01-HA	T
Pro-Street-S (Gewindefahrwerke - höhenverstellbar | *Coil-Overs-Adjustable Ride Hight*)																
1.6, 1.6 FSI	02.03 - 05.10	1060	1160	PSS65-15-007-01-22	A,24,34,45, 160			35-65	35-65							T
1.4 FSI, 1.4 TSI, 1.9 TDI, 2.0 FSI, 2.0 TDI, 2.0 TDI 16V	02.03 - 05.10	1200	1160	PSS65-15-007-02-22	A,24,34,45, 160			35-65	35-65							T
1.6, 1.6 FSI	02.03 - 05.10	1060	1230	PSS65-85-016-03-22	A,18,24,34,45, 160,178			35-70	35-70							T
1.4 FSI, 1.4 TSI, 1.9 TDI, 2.0 FSI, 2.0 TDI, 2.0 TDI 16V	02.03 - 05.10	1180	1230	PSS65-85-016-04-22	A,18,24,34,45, 160,178			35-70	35-70							T
TOURAN (1T3)																
Pro-Kit (Performance Fahrwerksfedern | *Performance Springs*)																
1.2 TSI	05.10 -	1060	1190	E10-85-012-01-22	A, 18, 20, 58			25	25					F11-79-004-02-VA	F11-85-012-01-HA	T
1.4 TSI, 1.6 TDI, 2.0 TDI	05.10 -	1160	1190	E10-85-012-02-22	A, 18, 20, 58			25	25					F11-85-012-02-VA	F11-85-012-01-HA	T
2.0 TDI	05.10 -	1200	1190	E10-85-012-03-22	A, 18, 20, 58			25	25					F11-85-012-03-VA	F11-85-012-01-HA	T
Anti-Roll-Kit (Performance Stabilisatoren | *Performance Sway Bars*)																
1.2 TSI, 1.4 TSI, 1.6 TDI, 2.0 TDI	05.10 -			E40-85-014-06-11	A, 18, 20, 22, 45					26	23	2-fach verstellbar *2-way adjustable*	2-fach verstellbar *2-way adjustable*	AS41-85-014-01-VA	AS41-85-014-01-HA	T
B12 Pro-Kit (Performance Komplettfahrwerke | *Performance Springs+Shocks*)																
2.0 TDI	11.10 -	1200	1190	E90-85-012-03-22	A, 18, 20, 78, 161			30	30					F11-85-012-03-VA	F11-85-012-01-HA	T
Pro-Street-S (Gewindefahrwerke - höhenverstellbar | *Coil-Overs-Adjustable Ride Hight*)																
1.2 TSI	05.10 -	1060	1160	PSS65-15-007-01-22	A,24,34,45, 160			35-65	35-65							T
1.2 TSI, 1.4 TSI, 1.6 TDI, 2.0 TDI	05.10 -	1200	1160	PSS65-15-007-02-22	A,24,34,45, 160			35-65	35-65							T
1.2 TSI	05.10 -	1060	1230	PSS65-85-016-03-22	A,18,24,45, 160,178			35-70	35-70							T
1.2 TSI, 1.4 TSI, 1.6 TDI, 2.0 TDI	05.10 -	1180	1230	PSS65-85-016-04-22	A,18,24,45, 160,178			35-70	35-70							T
TOURAN																
Pro-Kit (Performance Fahrwerksfedern | *Performance Springs*)																
1.2 TSI, 1.4 TSI	09.15 -	1070	1220	E10-79-012-02-22	A, 18, 20	36/14		35	30					F11-15-021-02-VA	F11-79-008-01-HA	T
1.4 TSI	09.15 -	1100	1220	E10-79-012-03-22	A, 18, 20	36/14		35	30					F11-85-041-01-VA	F11-79-008-01-HA	T
1.6 TDI, 2.0 TDI	09.15 -	1160	1220	E10-79-012-04-22	A, 18, 20	36/14		35	30					F11-85-042-03-FA	F11-79-008-01-HA	T
TRANSPORTER IV Bus (70XB, 70XC, 7DB, 7DW)																
Pro-Kit (Performance Fahrwerksfedern | *Performance Springs*)																
1.8, 1.9 D, 1.9 TD, 2.0, 2.4 D, 2.4 D Syncro, 2.5, 2.5 Syncro, 2.5 TDI, 2.5 TDI Syncro, 2.8 VR 6, 2.8 VR6, 2.8 VR6 Syncro	09.90 - 04.03	1600	1490	E8539-120	A, 12, 18			40-45	45					Drehstabverstellung *torsion bar*	F8539002	T
B12 Pro-Kit (Performance Komplettfahrwerke | *Performance Springs+Shocks*)																
1.8, 1.9 D, 1.9 TD, 2.0, 2.4 D, 2.4 D Syncro, 2.5, 2.5 Syncro, 2.5 TDI, 2.5 TDI Syncro, 2.8 VR 6, 2.8 VR6, 2.8 VR6 Syncro	09.90 - 04.03	1600	1490	E90-85-035-01-02	A, 18, 78, 161			40-45	45					F8539002	M85391101	T
TRANSPORTER IV Kasten (70XA) ***TRANSPORTER IV Box (70XA)***																
Pro-Kit (Performance Fahrwerksfedern | *Performance Springs*)																
1.9 D, 1.9 TD, 2.0, 2.4 D, 2.4 D Syncro, 2.5, 2.5 Syncro, 2.5 TDI, 2.5 TDI Syncro, 2.8 VR6, 2.8 VR6 Syncro	07.90 - 04.03	1600	1490	E8539-120	A, 12, 18			40-45	45					Drehstabverstellung *torsion bar*	F8539002	T
B12 Pro-Kit (Performance Komplettfahrwerke | *Performance Springs+Shocks*)																
1.9 D, 1.9 TD, 2.0, 2.4 D, 2.4 D Syncro, 2.5, 2.5 Syncro, 2.5 TDI, 2.5 TDI Syncro, 2.8 VR6	07.90 - 04.03	1600	1490	E90-85-035-01-02	A, 18, 78, 161			40-45	45					F8539002	M85391101	T
TRANSPORTER IV Pritsche/Fahrgestell (70XD) ***TRANSPORTER IV Platform/Chassis (70XD)***																
Pro-Kit (Performance Fahrwerksfedern | *Performance Springs*)																
1.8, 1.9 D, 1.9 TD, 2.0, 2.4 D, 2.4 D Syncro, 2.5, 2.5 Syncro, 2.5 TDI, 2.5 TDI Syncro, 2.8, 2.8 VR6	07.90 - 04.03	1600	1490	E8539-120	A, 12, 18			40-45	45					Drehstabverstellung *torsion bar*	F8539002	T
B12 Pro-Kit (Performance Komplettfahrwerke | *Performance Springs+Shocks*)																
1.8, 1.9 D, 1.9 TD, 2.0, 2.4 D, 2.4 D Syncro, 2.5, 2.5 Syncro, 2.5 TDI, 2.5 TDI Syncro, 2.8, 2.8 VR6	07.90 - 04.03	1600	1490	E90-85-035-01-02	A, 18, 78, 161			40-45	45					F8539002	M85391101	T

VOLKSWAGEN

Modell *Model*	Baujahr *Year*	Achslast Vorne kg *Front Axle Load kg*	Achslast Hinten kg *Rear Axle Load kg*	Artikel-Nr. *Part-No.*	Hinweise *Notes*	ab Nachtrag ...xx BE *from suppl. ...xx of type approval*	bis Nachtrag ...xx BE *to suppl. ...xx of type approval*	ca. Tieferl. Vorne mm *ca. Lowering Front mm*	ca. Tieferl. Hinten mm *ca. Lowering Rear mm*	Ø Vorne mm *Ø Front mm*	Ø Hinten mm *Ø Rear mm*	Verstellbarkeit Vorne *Adjustable Front*	Verstellbarkeit Hinten *Adjustable Rear*	Ersatzteilbez. Vorne *Spare Part Marking Front*	Ersatzteilbez. Hinten *Spare Part Marking Rear*	Gutachten *Homologation*
TRANSPORTER V Bus (7HB, 7HJ, 7EB, 7EJ, 7EF)																
Pro-Kit (Performance Fahrwerksfedern | *Performance Springs*)																
1.9 TDI, 2.0, 2.0 BiTDI, 2.0 BiTDI 4motion, 2.0 TDI, 2.0 TDI 4motion, 2.0 TSI, 2.0 TSI 4motion	04.03 -	1550	1720	E10-85-013-01-22	A, 12, 18			30	30					F11-85-013-01-VA	F11-85-013-01-HA	T
2.0 BiTDI, 2.0 BiTDI 4motion, 2.0 TDI, 2.0 TDI 4motion, 2.0 TSI, 2.0 TSI 4motion, 2.5 TDI, 2.5 TDI 4motion, 2.5 TDi, 3.2 V6, 3.2 V6 4motion	04.03 -	1710	1720	E10-85-013-02-22	A, 12, 18			30	30					F11-85-013-02-VA	F11-85-013-01-HA	T
B12 Pro-Kit (Performance Komplettfahrwerke | *Performance Springs+Shocks*)																
1.9 TDI, 2.0, 2.0 BiTDI 4motion, 2.0 TDI, 2.0 TDI 4motion, 2.0 TSI, 2.0 TSI 4motion	04.03 -	1550	1720	E90-85-013-01-22	A, 12, 18, 78, 97, 161			30	30					F11-85-013-01-VA	F11-85-013-01-HA	T
2.0 BiTDI 4motion, 2.0 TDI, 2.0 TDI 4motion, 2.0 TSI 4motion, 2.5 TDI, 2.5 TDI 4motion, 2.5 TDi, 3.2 V6, 3.2 V6 4motion	04.03 -	1710	1720	E90-85-013-02-22	A, 12, 18, 78, 97, 161			30	30					F11-85-013-02-VA	F11-85-013-01-HA	T
Pro-Street-S (Gewindefahrwerke - höhenverstellbar | *Coil-Overs-Adjustable Ride Hight*)																
2.0 BiTDI, 2.0 BiTDI 4motion, 2.0 TDI, 2.0 TDI 4motion, 2.0 TSI, 2.0 TSI 4motion,.5 TDI, 2.5 TDI 4motion, 2.5 TDi, 3.2 V6, 3.2 V6 4motion	04.03 -	1710	1720	PSS65-85-013-01-22	A,18,21,24,45, 160			35-65	35-65							T
TRANSPORTER V Kasten (7HA, 7HH, 7EA, 7EH) ***TRANSPORTER V Box (7HA, 7HH, 7EA, 7EH)***																
Pro-Kit (Performance Fahrwerksfedern | *Performance Springs*)																
1.9 TDI, 2.0, 2.0 BiTDI, 2.0 BiTDI 4motion, 2.0 TDI, 2.0 TDI 4motion, 2.0 TSI, 2.0 TSI 4motion	04.03 -	1550	1720	E10-85-013-01-22	A, 12, 18			30	30					F11-85-013-01-VA	F11-85-013-01-HA	T
2.0 BiTDI, 2.0 BiTDI 4motion, 2.0 TDI, 2.0 TDI 4motion, 2.0 TSI, 2.0 TSI 4motion, 2.5 TDI, 2.5 TDI 4motion, 3.2 4motion, 3.2 V6	04.03 -	1710	1720	E10-85-013-02-22	A, 12, 18			30	30					F11-85-013-02-VA	F11-85-013-01-HA	T
B12 Pro-Kit (Performance Komplettfahrwerke | *Performance Springs+Shocks*)																
1.9 TDI, 2.0, 2.0 BiTDI, 2.0 BiTDI 4motion, 2.0 TDI, 2.0 TDI 4motion, 2.0 TSI, 2.0 TSI 4motion	04.03 -	1550	1720	E90-85-013-01-22	A, 12, 18, 78, 97, 161			30	30					F11-85-013-01-VA	F11-85-013-01-HA	T
2.0 BiTDI, 2.0 BiTDI 4motion, 2.0 TDI, 2.0 TDI 4motion, 2.5 TDI, 2.5 TDI 4motion, 3.2 4motion, 3.2 V6	04.03 -	1710	1720	E90-85-013-02-22	A, 12, 18, 78, 97, 161			30	30					F11-85-013-02-VA	F11-85-013-01-HA	T
Pro-Street-S (Gewindefahrwerke - höhenverstellbar | *Coil-Overs-Adjustable Ride Hight*)																
2.0, 1.9 TDI, 2.0 TSI, 2.0 TSI 4motion, 3.2 V6, 3.2 4motion, 2.0 TDI, 2.0 TDI 4motion, 2.0 BiTDI, 2.0 BiTDI 4motion, 2.5 TDI, 2.5 TDI 4motion	04.03 -	1710	1720	PSS65-85-013-01-22	A,18,21,24,45, 160			35-65	35-65							T
TRANSPORTER V Pritsche/Fahrgestell **(7JD, 7JE, 7JL, 7JY, 7JZ, 7FD, 7FE, 7FL, 7FY, 7FZ)** ***TRANSPORTER V Platform/Chassis*** ***(7JD, 7JE, 7JL, 7JY, 7JZ, 7FD, 7FE, 7FL, 7FY, 7FZ)***																
Pro-Kit (Performance Fahrwerksfedern | *Performance Springs*)																
1.9 TDI, 2.0, 2.0 BiTDI, 2.0 BiTDI 4motion, 2.0 TDI, 2.0 TDI 4motion, 2.0 TSI	04.03 -	1550	1720	E10-85-013-01-22	A, 12, 18			30	30					F11-85-013-01-VA	F11-85-013-01-HA	T
2.0 BiTDI, 2.0 BiTDI 4motion, 2.0 TDI, 2.0 TDI 4motion, 2.0 TSI, 2.5 TDI, 2.5 TDI 4motion, 3.2 V6	04.03 -	1710	1720	E10-85-013-02-22	A, 12, 18			30	30					F11-85-013-02-VA	F11-85-013-01-HA	T
B12 Pro-Kit (Performance Komplettfahrwerke | *Performance Springs+Shocks*)																
1.9 TDI, 2.0, 2.0 BiTDI, 2.0 BiTDI 4motion, 2.0 TDI, 2.0 TDI 4motion, 2.0 TSI	04.03 -	1550	1720	E90-85-013-01-22	A, 12, 18, 78, 97, 161			30	30					F11-85-013-01-VA	F11-85-013-01-HA	T
2.0 BiTDI, 2.0 BiTDI 4motion, 2.0 TDI, 2.0 TDI 4motion, 2.5 TDI, 2.5 TDI 4motion, 3.2 V6	04.03 -	1710	1720	E90-85-013-02-22	A, 12, 18, 78, 97, 161			30	30					F11-85-013-02-VA	F11-85-013-01-HA	T
Pro-Street-S (Gewindefahrwerke - höhenverstellbar | *Coil-Overs-Adjustable Ride Hight*)																
2.0, 1.9 TDI, 3.2 V6, 3.2 4motion, 2.0 TDI, 2.0 TDI 4motion, 2.0 BiTDI, 2.0 BiTDI 4motion, 2.5 TDI, 2.5 TDI 4motion	04.03 -	1710	1720	PSS65-85-013-01-22	A,18,21,24,45, 160			35-65	30-65							T
UP																
Pro-Kit (Performance Fahrwerksfedern | *Performance Springs*)																
1.0	12.11 -	680	640	E10-85-040-01-22	A, 18, 20			20	25					F11-85-040-01-VA	F11-85-040-01-HA	T
B12 Pro-Kit (Performance Komplettfahrwerke | *Performance Springs+Shocks*)																
1.0	12.11 -	680	640	E90-85-040-01-22	A, 18, 20, 78, 161			20	25					F11-85-040-01-VA	F11-85-040-01-HA	T
Pro-Street-S (Gewindefahrwerke - höhenverstellbar | *Coil-Overs-Adjustable Ride Hight*)																
1.0	12.11 -	680	640	PSS65-85-040-01-22	A, 24, 25, 45, 160			30-60	30-60							T
VENTO (1H2)																
Pro-Kit (Performance Fahrwerksfedern | *Performance Springs*)																
1.4, 1.6, 1.8, 1.9 D, 1.9 TD, 1.9 TDI, 2.0, 2.0 GL, 2.8 VR6	11.91 - 08.94	980	840	E8530-140	A, 18, 19, 20, 184			30	30					F8530001	F8502002	T
1.4, 1.6, 1.8, 1.9 D, 1.9 SDI, 1.9 TD, 1.9 TDI, 2.0, 2.0 GL, 2.8 VR6	11.91 - 09.98	980	840	E8547-140	A, 18, 19, 20, 184			30	30					F8547001	F8502002	T
Sportline (Performance Fahrwerksfedern Sport | *Sport Performance Springs*)																
1.4, 1.6, 1.8, 1.9 D, 1.9 SDI, 1.9 TD, 1.9 TDI, 2.0, 2.0 GL, 2.8 VR6	11.91 - 09.98	950	840	E20-85-003-01-22	A, 20			45-50	30-35					F21-85-003-01-VA	F21-85-003-01-HA	T
Anti-Roll-Kit (Performance Stabilisatoren | *Performance Sway Bars*)																
1.4, 1.6, 1.8, 1.9 D, 1.9 SDI, 1.9 TD, 1.9 TDI, 2.0, 2.0 GL	11.91 - 09.98			E8502-320	A, 18, 20, 22, 45					22	25	nicht verstellbar *not adjustable*	nicht verstellbar *not adjustable*	AS8502320VA	AS8502320HA	T
2.8 VR6	01.92 - 09.98			E8530-320	A, 18, 20, 22, 45					22	25	nicht verstellbar *not adjustable*	nicht verstellbar *not adjustable*	AS8530320VA	AS8502320HA	T
B12 Pro-Kit (Performance Komplettfahrwerke | *Performance Springs+Shocks*)																
1.4, 1.6, 1.8, 1.9 D, 1.9 TD, 1.9 TDI, 2.0, 2.0 GL, 2.8 VR6	11.91 - 08.94	980	840	E90-85-003-01-22	A, 18, 19, 20, 78, 93, 161			30	30					F8530001	F8502002	T
1.4, 1.6, 1.8, 1.9 D, 1.9 SDI, 1.9 TD, 1.9 TDI, 2.0, 2.0 GL, 2.8 VR6	11.91 - 09.98	980	840	E95-85-003-02-22	A, 18, 19, 20, 78, 94, 161			30	30					F8547001	F8502002	T
B12 Sportline (Performance Komplettfahrwerke Sport | *Sport Performance Springs+Shocks*)																
1.4, 1.6, 1.8, 1.9 D, 1.9 SDI, 1.9 TD, 1.9 TDI, 2.0, 2.0 GL, 2.8 VR6	11.91 - 09.98	950	840	E95-85-003-01-22	A, 18, 20, 78, 93, 161			45-50	30-35					F21-85-003-01-VA	F21-85-003-01-HA	T
1.4, 1.6, 1.8, 1.9 D, 1.9 SDI, 1.9 TD, 1.9 TDI, 2.0, 2.0 GL, 2.8 VR6	11.91 - 09.98	950	840	E95-85-003-03-22	A, 18, 20, 78, 94, 161			45-50	30-35					F21-85-003-01-VA	F21-85-003-01-HA	T
Pro-Street-S (Gewindefahrwerke - höhenverstellbar | *Coil-Overs-Adjustable Ride Hight*)																
1.4, 1.6, 1.8, 1.9 D, 1.9 SDI, 1.9 TD, 1.9 TDI, 2.0, 2.0 GL, 2.8 VR6	11.91 - 09.98	890	880	PSS65-85-003-01-22	A, 20, 24, 25, 26, 45, 160			45-80	45-80							T
1.4, 1.6, 1.8, 1.9 D, 1.9 SDI, 1.9 TD, 1.9 TDI, 2.0, 2.0 GL, 2.8 VR6	11.91 - 09.98	980	880	PSS65-85-003-02-22	A, 20, 24, 25, 26, 45, 160			45-80	45-85							T

VOLVO

Modell	Baujahr	Achslast Vorne kg	Achslast Hinten kg	Artikel-Nr.	Hinweise	ab Nachtrag ...xx BE	bis Nachtrag ...xx BE	ca. Tieferl. Vorne mm	ca. Tieferl. Hinten mm	Ø Vorne mm	Ø Hinten mm	Verstellbarkeit Vorne	Verstellbarkeit Hinten	Ersatzteilbez. Vorne	Ersatzteilbez. Hinten	Gutachten
Model	*Year*	*Front Axle Load kg*	*Rear Axle Load kg*	*Part-No.*	*Notes*	*from suppl. ...xx of type approval*	*to suppl. ...xx of type approval*	*ca. Lowering Front mm*	*ca. Lowering Rear mm*	*Ø Front mm*	*Ø Rear mm*	*Adjustable Front*	*Adjustable Rear*	*Spare Part Marking Front*	*Spare Part Marking Rear*	*Homologation*
850 Kombi (LW)																
850 Estate (LW)																
Pro-Kit (Performance Fahrwerksfedern | *Performance Springs*)																
2.0, 2.0 Turbo, 2.3 T5, 2.3 T5 R, 2.3 T5-R, 2.5, 2.5 TDI	08.92 - 10.97	1110	1010	E8410-140	A, 18, 20			30	30					F8417001	F8410002	T
C30																
Pro-Kit (Performance Fahrwerksfedern | *Performance Springs*)																
1.6, 1.6 D, 1.6 D2, 1.8, 1.8 FlexFuel, 2.0, 2.0 FlexFuel	10.06 -	1020	900	E10-84-011-03-22	A, 18, 20			30	30					F11-55-008-02-VA	F11-84-011-01-HA	T
2.0 D, 2.4 i, D3, D4, D5, T5	10.06 -	1140	900	E10-84-011-01-22	A, 18, 20			30	30					F11-84-006-07-VA	F11-84-011-01-HA	T
B12 Pro-Kit (Performance Komplettfahrwerke | *Performance Springs+Shocks*)																
1.6, 1.6 D, 1.6 D2, 1.8, 1.8 FlexFuel, 2.0, 2.0 FlexFuel	10.06 -	1020	900	E90-84-011-03-22	A, 18, 20, 78, 161			30	30					F11-55-008-02-VA	F11-84-011-01-HA	T
2.0 D, 2.4 i, D3, D4, D5, T5	10.06 -	1140	900	E90-84-011-01-22	A, 18, 20, 78, 161			30	30					F11-84-006-07-VA	F11-84-011-01-HA	T
C70 I Coupe																
Pro-Kit (Performance Fahrwerksfedern | *Performance Springs*)																
2.0, 2.0 T, 2.3 T-5, 2.5, 2.5 T	03.97 - 09.02	1110	1010	E8420-140	A, 18, 20			20	20					F8417001	F8410002	T
C70 II Cabriolet																
C70 II Convertible																
Pro-Kit (Performance Fahrwerksfedern | *Performance Springs*)																
2.0 D, 2.4, 2.4 i, D3, D4, T5	03.06 -	1140	1080	E10-84-009-01-22	A, 18, 20			30	30					F11-84-006-07-VA	F11-35-014-01-HA	T
S40 I (VS)																
Pro-Kit (Performance Fahrwerksfedern | *Performance Springs*)																
1.6, 1.8, 1.8 i, 1.9 DI, 1.9 T4, 1.9 TD, 2.0, 2.0 T	07.95 - 08.99	960	905	E8415-140	A, 18, 20			30	30					F8415001	F8415002	T
S40 II (MS)																
Pro-Kit (Performance Fahrwerksfedern | *Performance Springs*)																
1.6, 1.6 D, 1.6 D2, 1.8, 1.8 FlexFuel, 2.0, 2.0 F	04.04 -	1020	1010	E10-84-006-14-22	A, 18, 20			25	25					F11-55-008-02-VA	F11-84-006-07-HA	T
2.0 D, 2.0 D4, 2.4, 2.4 D5, D3, D4, T5	01.04 -	1140	1010	E10-84-006-07-22	A, 18, 20			25	25					F11-84-006-07-VA	F11-84-006-07-HA	T
2.4 AWD, T5 AWD	04.04 -	1140	1080	E10-84-006-13-22	A, 18			30	30					F11-84-006-07-VA	F11-35-014-01-HA	T
B12 Pro-Kit (Performance Komplettfahrwerke | *Performance Springs+Shocks*)																
1.6, 1.6 D, 1.6 D2, 1.8, 1.8 FlexFuel, 2.0, 2.0 F	04.04 -	1020	1010	E90-84-006-01-22	A, 18, 20, 78, 161			25	25					F11-55-008-02-VA	F11-84-006-07-HA	T
2.0 D, 2.0 D4, 2.4, 2.4 D5, D3, D4, T5	01.04 -	1140	1010	E90-84-006-02-22	A, 18, 20, 78, 161			25	25					F11-84-006-07-VA	F11-84-006-07-HA	T
Pro-Street-S (Gewindefahrwerke - höhenverstellbar | *Coil-Overs-Adjustable Ride Hight*)																
2.0 D, 2.0 D4, 2.4, T5	01.04 -	1080	1010	PSS65-84-006-01-22	A, 24, 25, 26, 45, 160			25-55	25-55							T
S60																
Pro-Kit (Performance Fahrwerksfedern | *Performance Springs*)																
2.0 T, 2.3 T5, 2.4, 2.4 T, 2.4 T5, 2.5 T, T5	07.00 - 04.10	1110	1120	E10-84-004-01-22	A, 18, 20			30	30					F8421001	F11-84-004-01-HA	T
2.5 T AWD, R 2,5 T AWD	03.03 - 04.10	1110	1170	E10-84-004-08-22	A, 18			30	30					F8421001	F11-84-004-08-HA	T
2.4 D, 2.4 D5	07.01 - 04.10	1120	1120	E10-84-004-02-22	A, 18, 20			30	30					F11-84-003-02-VA	F11-84-004-01-HA	T
B12 Pro-Kit (Performance Komplettfahrwerke | *Performance Springs+Shocks*)																
2.0 T, 2.3 T5, 2.4, 2.4 T, 2.4 T5, T5	07.00 - 04.10	1110	1120	E90-84-004-01-22	A, 18, 20, 78, 161			30	30					F8421001	F11-84-004-01-HA	T
2.4 D, 2.4 D5, 2.5 T	07.01 - 04.10	1120	1120	E90-84-004-02-22	A, 18, 20, 78, 161			30	30					F11-84-003-02-VA	F11-84-004-01-HA	T
S60 II																
Pro-Kit (Performance Fahrwerksfedern | *Performance Springs*)																
DRIVe / D2, T3, T4, T4F, T5, T6, 2.0 T, D3, D4, D5	04.10 -	1180	960	E10-84-014-01-22	A, 18, 20			30	30					F11-35-019-02-VA	F11-84-010-01-HA	T
T6, D3, D4, D5	04.10 -	1250	960	E10-84-014-02-22	A, 18, 20			30	30					F11-84-010-01-VA	F11-84-010-01-HA	T
D5 AWD, T6 AWD	04.10 -	1250	1145	E10-84-014-03-22	A, 18			30	30					F11-84-010-01-VA	F11-35-019-03-HA	T
B12 Pro-Kit (Performance Komplettfahrwerke | *Performance Springs+Shocks*)																
DRIVe / D2, T3, T4, T4F, T5, T6, 2.0 T, D3, D4, D5	04.10 -	1180	960	E90-84-014-01-22	A, 18, 20, 78, 161			30	30					F11-35-019-02-VA	F11-84-010-01-HA	T
T6, D3, D4, D5	04.10 -	1250	960	E90-84-014-02-22	A, 18, 20, 78, 161			30	30					F11-84-010-01-VA	F11-84-010-01-HA	T
S80 II (AS)																
Pro-Kit (Performance Fahrwerksfedern | *Performance Springs*)																
2.5 T, 2.5 T FlexFuel, 3.2, 3.2 AWD, 2.4 D, D5, D5 AWD, T4, T4F, T5, T6 AWD	03.06 -	1270	1210	E10-84-010-01-22	A, 18			30	30					F11-84-010-01-VA	F11-84-010-01-HA	T
4.4 V8 AWD	03.06 -	1300	1210	E10-84-010-03-22	A, 18			30	30					F11-84-010-03-VA	F11-84-010-01-HA	T
B12 Pro-Kit (Performance Komplettfahrwerke | *Performance Springs+Shocks*)																
2.5 T, 2.5 T FlexFuel, 3.2, 2.4 D, D5, T4, T4F, T5	03.06 -	1270	1210	E90-84-010-01-22	A, 18, 78, 161			30	30					F11-84-010-01-VA	F11-84-010-01-HA	T
V40 Kombi (VW)																
V40 Estate (VW)																
Pro-Kit (Performance Fahrwerksfedern | *Performance Springs*)																
1.6, 1.8, 1.8 i, 1.9 DI, 1.9 TD, 2.0, 2.0 T	07.95 - 08.99	960	905	E8415-140	A, 18, 20			30	30					F8415001	F8415002	T
V40 Crosscountry																
Pro-Kit (Performance Fahrwerksfedern | *Performance Springs*)																
T4, D2, D3, D4	03.12 -	1020	1010	E10-84-006-14-22	A, 18, 20			30	30					F11-55-008-02-VA	F11-84-006-07-HA	T
D2, D3, D4	03.12 -	1140	1010	E10-84-006-07-22	A, 18, 20			30	30					F11-84-006-07-VA	F11-84-006-07-HA	T
T4 AWD, T5 AWD	01.13 -	1140	1080	E10-84-006-13-22	A, 18			30	30					F11-84-006-07-VA	F11-35-014-01-HA	T

VOLVO

Modell *Model*	Baujahr *Year*	Achslast Vorne kg *Front Axle Load kg*	Achslast Hinten kg *Rear Axle Load kg*	Artikel-Nr. *Part-No.*	Hinweise *Notes*	ab Nachtrag ...xx BE *from suppl. ...xx of type approval*	bis Nachtrag ...xx BE *to suppl. ...xx of type approval*	ca. Tieferl. Vorne mm *ca. Lowering Front mm*	ca. Tieferl. Hinten mm *ca. Lowering Rear mm*	Ø Vorne mm *Ø Front mm*	Ø Hinten mm *Ø Rear mm*	Verstellbarkeit Vorne *Adjustable Front*	Verstellbarkeit Hinten *Adjustable Rear*	Ersatzteilbez. Vorne *Spare Part Marking Front*	Ersatzteilbez. Hinten *Spare Part Marking Rear*	Gutachten *Homologation*
V40 Schrägheck ***V40 Hatchback***																
Pro-Kit (Performance Fahrwerksfedern | *Performance Springs*)																
D2, D3, D4, T2 GTDi, T3 GTDi, T4, T4 GTDi	03.12 -	1020	1010	E10-84-006-14-22	A, 18, 20			30	30					F11-55-008-02-VA	F11-84-006-07-HA	T
D2, D3, D4, T4, T5	03.12 -	1140	1010	E10-84-006-07-22	A, 18, 20			30	30					F11-84-006-07-VA	F11-84-006-07-HA	T
T4 AWD, T5 AWD	01.13 -	1140	1080	E10-84-006-13-22	A, 18			30	30					F11-84-006-07-VA	F11-35-014-01-HA	T
Pro-Street-S (Gewindefahrwerke - höhenverstellbar | *Coil-Overs-Adjustable Ride Hight*)																
D2, D3, D4, T2 GTDi, T3 GTDi, T4, T4 GTDi	03.12 -	1000	1025	PSS65-35-023-01-22	A, 18, 20, 24, 25			30-50	40-55							T
D2, D3, D4, T4, T5	03.12 -	1100	1025	PSS65-35-023-02-22	A, 18, 20, 24, 25			30-50	40-55							T
V50 (MW)																
Pro-Kit (Performance Fahrwerksfedern | *Performance Springs*)																
1.6, 1.6 D, 1.6 D2, 1.8, 1.8 FlexFuel, 2.0, 2.0 FlexFuel	04.04 -	1020	1010	E10-84-006-14-22	A, 18, 20			25	25					F11-55-008-02-VA	F11-84-006-07-HA	T
2.0 D, 2.4, 2.4 D5, 2.4 Tdi, D3, D4, T5	04.04 -	1140	1010	E10-84-006-07-22	A, 18, 20			25	25					F11-84-006-07-VA	F11-84-006-07-HA	T
2.4 AWD, T5 AWD	04.04 -	1140	1080	E10-84-006-13-22	A, 18			30	30					F11-84-006-07-VA	F11-35-014-01-HA	T
B12 Pro-Kit (Performance Komplettfahrwerke | *Performance Springs+Shocks*)																
1.6, 1.6 D, 1.6 D2, 1.8, 1.8 FlexFuel, 2.0, 2.0 FlexFuel	04.04 -	1020	1010	E90-84-006-01-22	A, 18, 20, 78, 161			25	25					F11-84-006-07-VA	F11-84-006-07-HA	T
2.0 D, 2.4, 2.4 D5, 2.4 Tdi, D3, D4, T5	04.04 -	1140	1010	E90-84-006-02-22	A, 18, 20, 78, 161			25	25					F11-84-006-07-VA	F11-84-006-07-HA	T
Pro-Street-S (Gewindefahrwerke - höhenverstellbar | *Coil-Overs-Adjustable Ride Hight*)																
2.0 D, 2.4, 2.4 D5, 2.4 Tdi, D3, D4, T5	04.04 -	1080	1010	PSS65-84-006-01-22	A, 24, 25, 45, 160			25-55	25-55							T
V60																
Pro-Kit (Performance Fahrwerksfedern | *Performance Springs*)																
DRIVe / D2, T3, T4, T4F, T5, 2.0 T, D3, D4, D5	09.10 -	1180	1145	E10-84-014-07-22	A, 18, 20			30	30					F11-35-019-02-VA	F11-35-019-03-HA	T
D3, D4, D5, T6	09.10 -	1250	1145	E10-84-014-03-22	A, 18, 20			30	30					F11-84-010-01-VA	F11-35-019-03-HA	T
T6 AWD, D4 AWD, D5 AWD	09.10 -	1250	1145	E10-84-014-03-22	A, 18			30	30					F11-84-010-01-VA	F11-35-019-03-HA	T
B12 Pro-Kit (Performance Komplettfahrwerke | *Performance Springs+Shocks*)																
DRIVe / D2, T3, T4, T4F, T5, 2.0 T, D3, D4, D5	09.10 -	1180	1145	E90-84-014-07-22	A, 18, 20, 78, 161			30	30					F11-35-019-02-VA	F11-35-019-03-HA	T
D3, D4, D5, T6	09.10 -	1250	1145	E90-84-014-03-22	A, 18, 20, 78, 161			30	30					F11-84-010-01-VA	F11-35-019-03-HA	T
V70 I (LV)																
Pro-Kit (Performance Fahrwerksfedern | *Performance Springs*)																
2.0, 2.0 Turbo, 2.3 T-5, 2.3 Turbo, 2.4, 2.4 Turbo, 2.5 TDI	01.97 - 05.00	1110	1010	E8410-140	A, 18, 20			30	30					F8417001	F8410002	T
V70 II (SW)																
Pro-Kit (Performance Fahrwerksfedern | *Performance Springs*)																
2.0 T, 2.3 T5, 2.4, 2.4 T, 2.4 T5	03.00 - 08.07	1110	1170	E10-84-003-01-22	A, 18, 20			30	30					F8421001	F11-84-003-01-HA	T
2.4 D, 2.4 D5, 2.5 T, 2.5 TDI	03.00 - 08.07	1120	1170	E10-84-003-02-22	A, 18, 20			30	30					F11-84-003-02-VA	F11-84-003-01-HA	T
B12 Pro-Kit (Performance Komplettfahrwerke | *Performance Springs+Shocks*)																
2.0 T, 2.3 T5, 2.4, 2.4 T, 2.4 T5	03.00 - 08.07	1100	1170	E90-84-003-01-22	A, 18, 20, 78, 161			30	30					F8421001	F11-84-003-01-HA	T
2.4 D, 2.4 D5, 2.5 T, 2.5 TDI	03.00 - 08.07	1120	1170	E90-84-003-02-22	A, 18, 20, 78, 161			30	30					F11-84-003-02-VA	F11-84-003-01-HA	T
V70 III (BW)																
Pro-Kit (Performance Fahrwerksfedern | *Performance Springs*)																
2.0, 2.0 T, 2.0 T FlexiFuel, 2.5 T, 3.2, 2.0 D, 2.4 D, D3, D4, D4 AWD, D5, D5 AWD, T4, T5	08.07 -	1270	1220	E10-84-012-01-22	A, 18			30	30					F11-84-010-01-VA	F11-35-017-01-HA	T
D5 AWD, 3.2 AWD, T6 AWD	08.07 -	1300	1220	E10-84-012-03-22	A, 18			30	30					F11-84-010-03-VA	F11-35-017-01-HA	T
XC60																
Pro-Kit (Performance Fahrwerksfedern | *Performance Springs*)																
2.4 D Schaltgetriebe, D3 Schaltgetriebe, T5 Schaltgetriebe *2.4 D manual transmission, D3 manual transmission, T5 manual transmission*	07.09 -	1260	1310	E10-84-013-03-22	A, 18, 20			25	25					F11-84-010-01-VA	F11-35-019-03-HA	T
2.4 D, 2.4 D / D3 / D4 AWD, 3.2 AWD, D3, D5, D5 AWD, T5, T6 AWD	05.08 -	1290	1310	E10-84-013-01-22	A, 18			25	25					F11-84-010-03-VA	F11-35-019-03-HA	T
XC70 II																
Pro-Kit (Performance Fahrwerksfedern | *Performance Springs*)																
3.2 AWD, T6 AWD, D3 AWD, D4 AWD, D5 AWD, 2.4 D AWD	08.07 -	1270	1210	E10-84-012-05-22	A, 18			25	20					F11-84-010-01-VA	F11-84-010-01-HA	T
XC90 II																
Pro-Kit (Performance Fahrwerksfedern | *Performance Springs*)																
T5 AWD, T6 AWD, D4, D4 AWD, D5 AWD	09.14 -	1310	1490	E10-84-017-01-20	A, 18			30	30					F11-84-017-01-FA	Querblattfeder	T

VOLVO

3dCARBON
Eibach
Eibach

PRO-SPACER

Systemerklärung | *System Description*

System 1

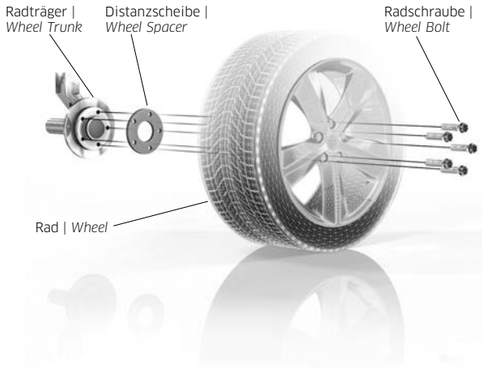

- Scheibe ausgeführt als Durchsteckssystem
- Mit Zentrierbohrung
- Spurweitenänderung von 10 bis 20 mm (Scheibendicke 5 bis 10 mm)
- Befestigung mittels längerer Radschrauben
- **Lieferung ohne Befestigungsteile (gesondert zu bestellen)**

- *Disc with a pass-through system*
- *With centering boring*
- *Track change from 10 to 20 mm (disc thickness from 5 to 10 mm)*
- *Fastening by using longer wheel bolts*
- ***Delivery without attachment parts (to order separately)***

System 2

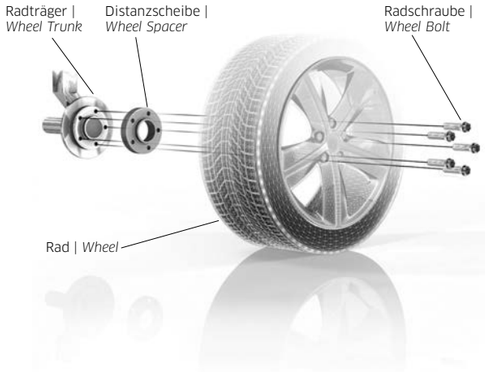

- Scheibe ausgeführt als Durchsteckssystem
- Mit Zentrierbund (Zentriernase)
- Spurweitenänderung von 14 bis 40 mm (Scheibendicke 7 bis 20 mm)
- Befestigung mittels längerer Radschrauben
- **Lieferung ohne Befestigungsteile (gesondert zu bestellen)**

- *Disc with a pass-through system*
- *With centering collar (centering nose)*
- *Track change from 14 to 40 mm (disc thickness from 7 to 20 mm)*
- *Fastening by using longer wheel bolts*
- ***delivery without attachment parts (to order separately)***

System 3 | 7

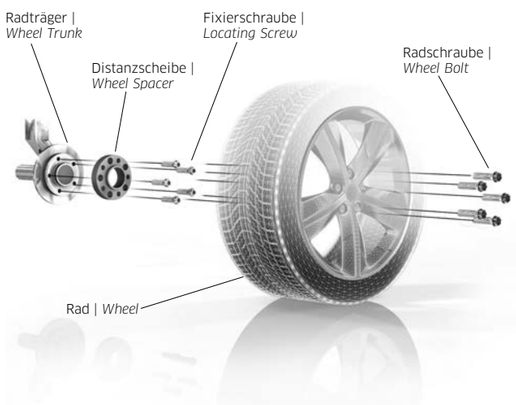

- Scheibe ausgeführt als Schraubsystem
- Mit Zentrierbund (Zentriernase)
- Spurweitenänderung von 40 bis 60 mm (Scheibendicke 20 bis 30 mm)
- Befestigung:
  a) Scheibe am Radträger: mittels Spezial-Fixierschrauben
  b) Rad an Scheibe: mittels Serien- (bzw. Zubehör-) schraube
- **Lieferung inkl. Befestigungsteile**
- System 7: mit Stahlgewindebuchsen

- *Disc with a screw system*
- *With centering collar (centering nose)*
- *Track change from 40 to 60 mm (disc thickness from 20 to 30 mm)*
- *Fastening:*
  a) disc at wheel carrier: by using special fixing bolts
  b) wheel at disc: by using production (or accessory-wheel-) bolts
- ***Delivery with attachment parts***
- *System 7: with steel bushing*

PRO-SPACER

Systemerklärung | *System Description*

System 4 | 8

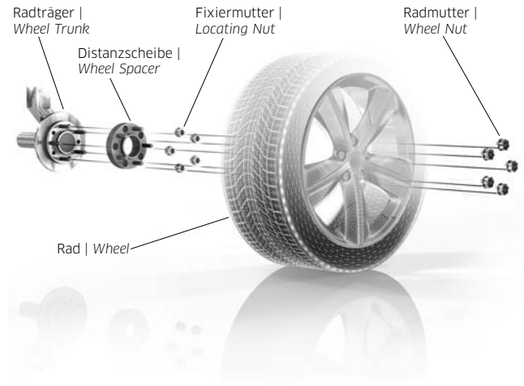

- Scheibe ausgeführt als Schraubsystem
- Mit Zentrierbund (Zentriernase)
- Spurweitenänderung von 30 bis 60 mm (Scheibendicke 15 bis 30 mm)
- Befestigung:
  a) Scheibe am Radträger: mittels Spezial-Fixiermutter
  b) Rad an Scheibe: mittels Serien- (bzw. Zubehör-) mutter
- **Lieferung inkl. Befestigungsteile**
- **System 8:** ohne Zentrierbund (für Geländefahrzeuge)

- *Disc with a screw system*
- *With centering collar (centering nose)*
- *Track change from 30 to 60 mm (disc thickness from 20 to 30 mm)*
- *Fastening:*
  a) disc at wheel carrier: by using special-fixing nut
  b) wheel at disc: by using production (or accessory) nut
- ***Delivery with attachment parts***
- ***System 8:** without centering collar (centeringnose)*

System 5

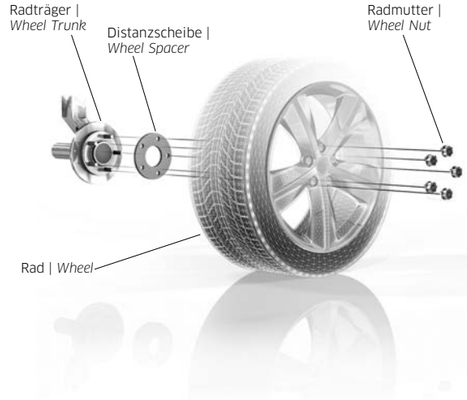

- Scheibe ausgeführt als Durchsteckssystem
- Mit Zentrierbohrung
- Spurweitenänderung von 10 bis 16 mm (Scheibendicke 5 bis 8 mm)
- Befestigung mittels längerer Rändelbolzen (am Fahrzeug auszutauschen)
- **Lieferung inkl. Befestigungsteile (für Serienräder bzw. Räder mit Serienbefestigung)**

- *Disc with a pass-through system*
- *With centering boring*
- *Track change from 10 to 16 mm (disc thickness from 5 to 8 mm)*
- *Fastening by using longer knurled stud (to change at the automobile)*
- ***Delivery with attachment parts (for standard wheels or wheels with standard fixing)***

System 6

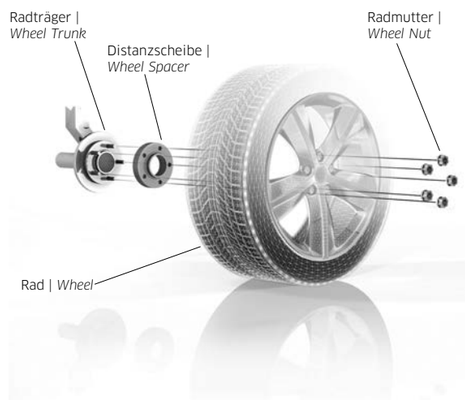

- Scheibe ausgeführt als Durchsteckssystem
- mit Zentrierbund (Zentriernase)
- Spurweitenänderung von 20 bis 40 mm (Scheibendicke 10 bis 20 mm)
- Befestigung mittels längerer Rändelbolzen (am Fahrzeug auszutauschen)
- **Lieferung inkl. Befestigungsteile (für Serienräder bzw. Räder mit Serienbefestigung)**

- *Disc with a pass-through system*
- *With centering collar (centering nose)*
- *Track change from 20 to 40 mm (disc thickness from 10 to 20 mm)*
- *Fastening by using longer knurled stud (to change at the automobile)*
- ***Delivery with attachment parts (for standard wheels or wheels with standard fixing)***

PRO-SPACER | Kitbestückung

Inhalte der Pro-Spacer-Verpackungen

System 1
- Zwei Pro-Spacer
- Montageanleitung und Gutachten auf CD
- Längere Radschrauben müssen gesondert bestellt werden! Bei Verwendung von Zubehörfelgen variieren die Radschrauben. Kopf- und Schaftlänge der Radschraube müssen daher erst ermittelt werden. Bitte die Checkliste ausfüllen!

System 2
- Zwei Pro-Spacer
- Montageanleitung und Gutachten auf CD
- Längere Radschrauben müssen gesondert bestellt werden! Bei Verwendung von Zubehörfelgen variieren die Radschrauben. Kopf- und Schaftlänge der Radschraube müssen daher erst ermittelt werden. Bitte die Checkliste ausfüllen!

System 3 | 7
- Zwei Pro-Spacer
- Spezial-Fixierschrauben
- Montageanleitung und Gutachten auf CD

System 4 | 8
- Zwei Pro-Spacer mit bereits eingepressten Rändelbolzen
- Kurze Spezial-Muttern (Fixiermuttern)
- Montageanleitung und Gutachten auf CD

System 5
- Zwei Pro-Spacer
- Längere Rändelbolzen
- Montageanleitung und Gutachten auf CD

System 6
- Zwei Pro-Spacer
- Längere Rändelbolzen
- Montageanleitung und Gutachten auf CD

Die Inhalte können variieren.

PRO SPACER | *Bill of Materials*

Contents of the Pro-Spacer-Packages

System 1
- *Two Pro-Spacer*
- *Installation instructions and information on CD*
- *Longer wheel bolts must be ordered separately! As the wheel bolts can vary for example when accessory wheels are mounted, the head form and length of shaft of the wheel installed at present must be determined, so that we can supply the suitable replacement! In this case, we require the filled-out Checklist from you!*

System 2
- *Two Pro-Spacer*
- *Installation instructions and information on CD*
- *Longer wheel bolts must be ordered separately! As the wheel bolts can vary for example when accessory wheels are mounted, the head form and length of shaft of the wheel installed at present must be determined, so that we can supply the suitable replacement! In this case, we require the filled-out Checklist from you!*

System 3 | 7
- *Two Pro-Spacer*
- *Special mounting bolts*
- *Installation instructions and information on CD*

System 4 | 8
- *Two Pro-Spacer with pressed-in knurled studs*
- *Short special wheel nuts*
- *Installation instructions and information on CD*

System 5
- *Two Pro-Spacer*
- *Longer knurled studs*
- *Installation instructions and information on CD*

System 6
- *Two Pro-Spacer*
- *Longer knurled studs*
- *Installation instructions and information on CD*

Contents may vary.

ANLEITUNG

zum Ausmessen eines Fahrzeuges zur Ermittlung der passenden Pro-Spacer

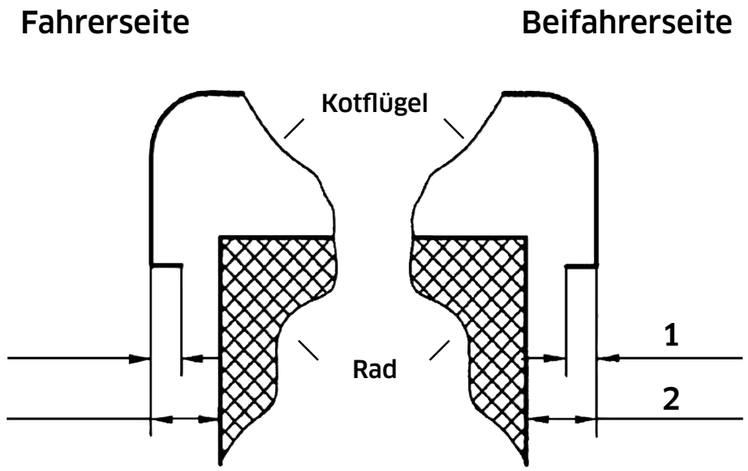

Vorgehensweise:

Am Außenkotflügel ein Lot fällen
(z.B. mit einer Wasserwaage)

- Den Abstand von der Reifenflanke zur Wasserwaage messen (Maß 2)
- Die Kotflügelkante messen (Maß 1)
- Maß 1 von Maß 2 abziehen (gegebenenfalls zusätzlich 3 bis 5 mm als Sicherheit)
- So erhalten Sie ein ungefähres Maß, welches man als Spurverbreiterung pro Seite montieren kann

Bitte beachten:

Man sollte immer Fahrer und Beifahrerseite messen, da es produktionsbedingte Toleranzen und Achsverschiebungen geben kann und somit die Maße von der Fahrer- zur Beifahrerseite unterschiedlich sein können.

In einem solchen Fall ist das kleinere Maß anzunehmen! Ferner sind in das Radhaus ragende Teile zu berücksichtigen (z.B. Schrauben, Ausbuchtungen des Innenkotflügels)

Das Maß 2 kann je nach verwendeter Rad-Reifenkombination stark variieren, weshalb man keine pauschale Aussage treffen kann, welcher Pro-Spacer verwendet werden sollte. Es ist immer erforderlich zu messen.

Bitte verwenden Sie die Pro-Spacer-Checkliste.

MANUAL

for Measurement of a Vehicle to Detect the Matching Pro-Spacer

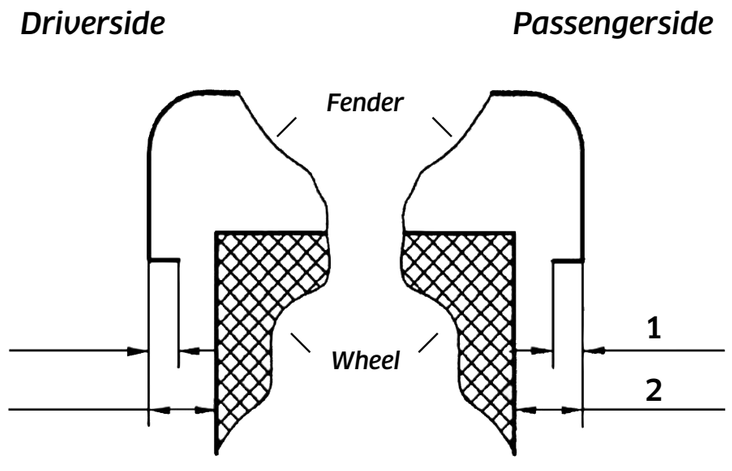

Procedure:

Measuring is very important
How to measure:

- *Measure distance 1 and 2 as shown in the picture*
- *Subtract measurement 1 from measurement 2 (minus 3 to 5 mm safety)*
- *This way you will obtain an approximately measurement of which kind of spacer fits on each side*

Please note:

You should always measure both – the driver and passenger side, because axle hub locations may differ slightly from side to side. In this case you choose the lower measurement! Additionally you should pay attention to parts in the fender (for example screws, inner fender linings, et cetera).

Please use the Pro-Spacer-Checklist.

More Video-Infos: eibach.com eibach.com

CHECKLISTE

PRO-SPACER

Datum .....

☐ **ANFRAGE** ☐ **BESTELLUNG**

Bitte Checkliste vollständig ausfüllen und an Ihren Stützpunkthändler weiterleiten!*

Adresse: ..... Telefon | Fax: .....

..... e-Mail: .....

.....

KFZ-DATEN:

Hersteller|Typ: ..... Baujahr: .....

Schl.-Nr.: zu 2(2.1): ..... zu 3(2.2): ..... Lochanzahl der Felge: ☐ 3 ☐ 4 ☐ 5

Bitte ermitteln Sie nun anhand der montierten Schrauben die Schraubenart und die Schaftlänge:

☐ Kegelschraube 60°
☐ mit beweglichem Kegel

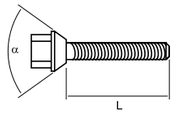

☐ Flachbundschraube

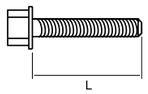

☐ Kugelschraube
(z.B. VAG | MB-Original-Räder)
☐ mit beweglicher Kugel

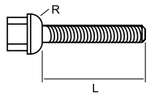

☐ Rändelbolzen
(Sind im Lieferumfang enthalten - Bitte beachten Sie hierzu die Hinweise im Katalog und Internet)

Schaftlänge (L - immer angeben!): ..... mm

Ich möchte folgende Eibach-Pro-Spacer Spurverbreiterungen montieren:

Vorderachse ..... mm pro Seite | Hinterachse ..... mm pro Seite

Bitte tragen Sie hier unsere Artikelnummern ein:

VORDERACHSE

Pro-Spacer-Nr.: ..... Schrauben-Nr.: .....

HINTERACHSE

Pro-Spacer-Nr.: ..... Schrauben-Nr.: .....

* Stützpunkthändlerliste, Katalog und Gutachten finden Sie im Internet unter eibach.com

CHECKLIST

PRO-SPACER

Date .....

☐ ***INQUIRY*** ☐ ***ORDER***

Please fill out all the spaces below and forward the checklist to your distributor!*

Address: ..... *Phone | Fax:* .....

..... *e-Mail:* .....

.....

CAR-INFO:

Make: ..... *Year:* .....

Model: ..... *Number of holes in the wheel:* ☐ 3 ☐ 4 ☐ 5

Please inspect and measure the existing wheel lug bolts or studs to determine the bolt head style | size, thread diameter, shaft-length and pitch:

☐ *Taper Head Bolt 60°*
☐ *with loose taper*

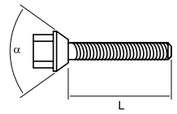

☐ *Flat Head Bolt*

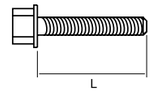

☐ *Round Head Bolt*
(VAG-original-wheels)
☐ *with loose round head collar*

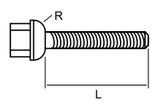

☐ *Wheel Stud*
(Included in delivery. - Please pay attention to the catalogue- or internet-notes)

Shaft-Length *(L - required!):* ..... *mm*

I would like to install following sizes of Eibach-Pro-Spacer:

Front Axle ..... *mm per side* | *Rear Axle* ..... *mm per side*

Please fill out with our material-numbers:

FRONT AXLE

Pro-Spacer-No.: ..... *Bolt-No.:* .....

REAR AXLE

Pro-Spacer-No.: ..... *Bolt-No.:* .....

** distributor-list and catalogue at eibach.com*

HAMA
YOKOH
FALKEN
HANKOOK
RILSTEIN
PFC
ATS
ZURICH
254
ADAC NORDRHEIN
24h NÜRBURGRING NORDSCHLEIFE
UMPARKEN IM KOPF.DE
BASTUCK
SANDTLER
Eibach
dmsi

NUMMERNSCHLÜSSEL

Radschrauben

S1-6-14-50-27-17

Art des Anbauteiles
- **S1** – Schraube
- **S2** – Mutter
- **S3** – Bolzen
- **S4** – Schraube m. losem Bund

Kopfform
- **1** – Kegelkopf
- **5,6,7** – Kugelkopf
- **9** – Flachbund

Gewindeform
- ***12-25*** - *M12 x 1,25*
- ***12-50*** - *M12 x 1,5*
- ***14-25*** - *M14 x 1,25*
- ***14-50*** - *M14 x 1,5*

Schaftlänge in mm

Schlüsselweite

Spurverbreiterungen

S90-2-12-003

Pro-Spacer-KIT

(Verpackung mit zwei Stück Scheiben und gegebenenfalls Befestigungsmaterial)

System

Breite der Scheibe in mm
(12 mm)

91212003

Einzelscheibe

Nummer muss nicht der KIT-Nummer entsprechen!

CODING

of Bolt Numbers

S1-6-14-50-27-17

Type of Mounting Component
- ***S1*** – *Bolt*
- ***S2*** – *Nut*
- ***S3*** – *Stud bolt*
- ***S4*** – *Bolt with loose taper or loose round head*

Type of Head
- ***1*** – *Taper head*
- ***5,6,7*** – *Round head*
- ***9*** – *Flat Head*

Type of Thread
- ***12-25*** - *M12 x 1,25*
- ***12-50*** - *M12 x 1,5*
- ***14-25*** - *M14 x 1,25*
- ***14-50*** - *M14 x 1,5*

Length of Shaft in mm

Wrench Size

of Wheel Spacers

S90-2-12-003

Pro-Spacer-KIT

Kit with two pieces Wheel spacers and fastening parts (if necessary)

System

Width of Single Wheel Spacer in mm
(12 mm)

91212003

Single Spacer

Number need not be the same as the KIT-Number!

Artikelnummer *Part-No.*	Gewinde-Schaftlänge *Thread Length*	Schlüsselweite *Wrench Size*	Bundform *Bolt Head Style | -Size*
Kegelbund 60° M12 | ***Taper Head Bolt 60° M12***			
S1-1-12-25-19-17-1	M12x1,25x19 Kurzkopf | *short head*	SW17	Kegel 60° | *Taper Head 60°*
S1-1-12-25-24-17-1	M12x1,25x24 Kurzkopf | *short head*	SW17	Kegel 60° | *Taper Head 60°*
S1-1-12-25-27-17	M12x1,25x27	SW17	Kegel 60° | *Taper Head 60°*
S1-1-12-25-32-17	M12x1,25x32	SW17	Kegel 60° | *Taper Head 60°*
S1-1-12-25-37-17	M12x1,25x37	SW17	Kegel 60° | *Taper Head 60°*
S1-1-12-25-39-17	M12x1,25x39	SW17	Kegel 60° | *Taper Head 60°*
S1-1-12-25-42-17	M12x1,25x42	SW17	Kegel 60° | *Taper Head 60°*
S1-1-12-25-47-17	M12x1,25x47	SW17	Kegel 60° | *Taper Head 60°*
S1-1-12-25-52-17	M12x1,25x52	SW17	Kegel 60° | *Taper Head 60°*
S1-1-12-25-57-17	M12x1,25x57	SW17	Kegel 60° | *Taper Head 60°*
S1-1-12-25-26-19	M12x1,25x26	SW19	Kegel 60° | *Taper Head 60°*
S1-1-12-25-28-19	M12x1,25x28	SW19	Kegel 60° | *Taper Head 60°*
S1-1-12-25-32-19	M12x1,25x32	SW19	Kegel 60° | *Taper Head 60°*
S1-1-12-25-36-19	M12x1,25x36	SW19	Kegel 60° | *Taper Head 60°*
S1-1-12-25-38-19	M12x1,25x38	SW19	Kegel 60° | *Taper Head 60°*
S1-1-12-25-40-19	M12x1,25x40	SW19	Kegel 60° | *Taper Head 60°*
S1-1-12-25-43-19	M12x1,25x43	SW19	Kegel 60° | *Taper Head 60°*
S1-1-12-25-46-19	M12x1,25x46	SW19	Kegel 60° | *Taper Head 60°*
S1-1-12-25-50-19	M12x1,25x50	SW19	Kegel 60° | *Taper Head 60°*
S1-1-12-25-55-19	M12x1,25x55	SW19	Kegel 60° | *Taper Head 60°*
S1-1-12-50-19-17-1	M12x1,5x19 Kurzkopf | *short head*	SW17	Kegel 60° | *Taper Head 60°*
S1-1-12-50-24-17	M12x1,5x24	SW17	Kegel 60° | *Taper Head 60°*
S1-1-12-50-24-17-1	M12x1,5x24 Kurzkopf | *short head*	SW17	Kegel 60° | *Taper Head 60°*
S1-1-12-50-26-17	M12x1,5x26	SW17	Kegel 60° | *Taper Head 60°*
S1-1-12-50-28-17	M12x1,5x28	SW17	Kegel 60° | *Taper Head 60°*
S1-1-12-50-30-17	M12x1,5x30	SW17	Kegel 60° | *Taper Head 60°*
S1-1-12-50-32-17	M12x1,5x32	SW17	Kegel 60° | *Taper Head 60°*
S1-1-12-50-35-17	M12x1,5x35	SW17	Kegel 60° | *Taper Head 60°*
S1-1-12-50-39-17	M12x1,5x39	SW17	Kegel 60° | *Taper Head 60°*
S1-1-12-50-43-17	M12x1,5x43	SW17	Kegel 60° | *Taper Head 60°*
S1-1-12-50-45-17	M12x1,5x45	SW17	Kegel 60° | *Taper Head 60°*
S1-1-12-50-47-17	M12x1,5x47	SW17	Kegel 60° | *Taper Head 60°*
S1-1-12-50-50-17	M12x1,5x50	SW17	Kegel 60° | *Taper Head 60°*
S1-1-12-50-55-17	M12x1,5x55	SW17	Kegel 60° | *Taper Head 60°*
S1-1-12-50-60-17	M12x1,5x60	SW17	Kegel 60° | *Taper Head 60°*
S1-1-12-50-24-17-B	M12x1,5x24 schwarz | *black*	SW17	Kegel 60° | *Taper Head 60°*
S1-1-12-50-26-17-B	M12x1,5x26 schwarz | *black*	SW17	Kegel 60° | *Taper Head 60°*
S1-1-12-50-28-17-B	M12x1,5x28 schwarz | *black*	SW17	Kegel 60° | *Taper Head 60°*
S1-1-12-50-30-17-B	M12x1,5x30 schwarz | *black*	SW17	Kegel 60° | *Taper Head 60°*
S1-1-12-50-35-17-B	M12x1,5x35 schwarz | *black*	SW17	Kegel 60° | *Taper Head 60°*
S1-1-12-50-39-17-B	M12x1,5x39 schwarz | *black*	SW17	Kegel 60° | *Taper Head 60°*
S1-1-12-50-43-17-B	M12x1,5x43 schwarz | *black*	SW17	Kegel 60° | *Taper Head 60°*
S1-1-12-50-45-17-B	M12x1,5x45 schwarz | *black*	SW17	Kegel 60° | *Taper Head 60°*
S1-1-12-75-27-19	M12x1,75x27	SW19	Kegel 60° | *Taper Head 60°*
S1-1-12-75-35-19	M12x1,75x35	SW19	Kegel 60° | *Taper Head 60°*
S1-1-12-75-45-19	M12x1,75x45	SW19	Kegel 60° | *Taper Head 60°*
S1-1-12-75-50-19	M12x1,75x50	SW19	Kegel 60° | *Taper Head 60°*
Schrauben mit losem Kegelbund 60° M12 | ***Studs with loose Taper Head 60° M12***			
S4-1-12-50-30-17	M12x1,5x30	SW17	Kegel 60° | *Taper Head 60°*
S4-1-12-50-32-17	M12x1,5x32	SW17	Kegel 60° | *Taper Head 60°*
S4-1-12-50-36-17	M12x1,5x36	SW17	Kegel 60° | *Taper Head 60°*
S4-1-12-50-40-17	M12x1,5x40	SW17	Kegel 60° | *Taper Head 60°*
S4-1-12-50-43-17	M12x1,5x43	SW17	Kegel 60° | *Taper Head 60°*
S4-1-12-50-46-17	M12x1,5x46	SW17	Kegel 60° | *Taper Head 60°*
S4-1-12-50-48-17	M12x1,5x48	SW17	Kegel 60° | *Taper Head 60°*
S4-1-12-50-50-17	M12x1,5x50	SW17	Kegel 60° | *Taper Head 60°*
S4-1-12-50-56-17	M12x1,5x56	SW17	Kegel 60° | *Taper Head 60°*
S4-1-12-50-60-17	M12x1,5x60	SW17	Kegel 60° | *Taper Head 60°*
Kegelbund 60° M14 | ***Taper Head Bolt 60° M14***			
S1-1-14-25-24-17-1	M14x1,25x24 Kurzkopf | *short head*	SW17	Kegel 60° | *Taper Head 60°*
S1-1-14-25-24-17	M14x1,25x24	SW17	Kegel 60° | *Taper Head 60°*
S1-1-14-25-28-17	M14x1,25x28	SW17	Kegel 60° | *Taper Head 60°*
S1-1-14-25-30-17	M14x1,25x30	SW17	Kegel 60° | *Taper Head 60°*
S1-1-14-25-35-17	M14x1,25x35	SW17	Kegel 60° | *Taper Head 60°*
S1-1-14-25-40-17	M14x1,25x40	SW17	Kegel 60° | *Taper Head 60°*
S1-1-14-25-45-17	M14x1,25x45	SW17	Kegel 60° | *Taper Head 60°*
S1-1-14-25-47-17	M14x1,25x47	SW17	Kegel 60° | *Taper Head 60°*
S1-1-14-25-50-17	M14x1,25x50	SW17	Kegel 60° | *Taper Head 60°*
S1-1-14-25-55-17	M14x1,25x55	SW17	Kegel 60° | *Taper Head 60°*
S1-1-14-25-60-17	M14x1,25x60	SW17	Kegel 60° | *Taper Head 60°*
S1-1-14-25-25-17-B	M14x1,25x25 schwarz | *black*	SW17	Kegel 60° | *Taper Head 60°*
S1-1-14-25-27-17-B	M14x1,25x27 schwarz | *black*	SW17	Kegel 60° | *Taper Head 60°*
S1-1-14-25-33-17-B	M14x1,25x33 schwarz | *black*	SW17	Kegel 60° | *Taper Head 60°*
S1-1-14-25-35-17-B	M14x1,25x35 schwarz | *black*	SW17	Kegel 60° | *Taper Head 60°*
S1-1-14-25-38-17-B	M14x1,25x38 schwarz | *black*	SW17	Kegel 60° | *Taper Head 60°*
S1-1-14-25-40-17-B	M14x1,25x40 schwarz | *black*	SW17	Kegel 60° | *Taper Head 60°*
S1-1-14-25-43-17-B	M14x1,25x43 schwarz | *black*	SW17	Kegel 60° | *Taper Head 60°*
S1-1-14-25-47-17-B	M14x1,25x47 schwarz | *black*	SW17	Kegel 60° | *Taper Head 60°*
S1-1-14-25-50-17-B	M14x1,25x50 schwarz | *black*	SW17	Kegel 60° | *Taper Head 60°*

Artikelnummer *Part-No.*	Gewinde-Schaftlänge *Thread Length*	Schlüsselweite *Wrench Size*	Bundform *Bolt Head Style | -Size*
Kegelbund 60° M14 | ***Taper Head Bolt 60° M14***			
S1-1-14-50-19-17-1	M14x1,5x19 Kurzkopf | *short head*	SW17	Kegel 60° | *Taper Head 60°*
S1-1-14-50-24-17-1	M14x1,5x24 Kurzkopf | *short head*	SW17	Kegel 60° | *Taper Head 60°*
S1-1-14-50-25-17	M14x1,5x25	SW17	Kegel 60° | *Taper Head 60°*
S1-1-14-50-28-17	M14x1,5x28	SW17	Kegel 60° | *Taper Head 60°*
S1-1-14-50-30-17	M14x1,5x30	SW17	Kegel 60° | *Taper Head 60°*
S1-1-14-50-35-17	M14x1,5x35	SW17	Kegel 60° | *Taper Head 60°*
S1-1-14-50-40-17	M14x1,5x40	SW17	Kegel 60° | *Taper Head 60°*
S1-1-14-50-45-17	M14x1,5x45	SW17	Kegel 60° | *Taper Head 60°*
S1-1-14-50-47-17	M14x1,5x47	SW17	Kegel 60° | *Taper Head 60°*
S1-1-14-50-50-17	M14x1,5x50	SW17	Kegel 60° | *Taper Head 60°*
S1-1-14-50-55-17	M14x1,5x55	SW17	Kegel 60° | *Taper Head 60°*
S1-1-14-50-60-17	M14x1,5x60	SW17	Kegel 60° | *Taper Head 60°*
S1-1-14-50-25-17-B	M14x1,5x25 schwarz | *black*	SW17	Kegel 60° | *Taper Head 60°*
S1-1-14-50-28-17-B	M14x1,5x28 schwarz | *black*	SW17	Kegel 60° | *Taper Head 60°*
S1-1-14-50-30-17-B	M14x1,5x30 schwarz | *black*	SW17	Kegel 60° | *Taper Head 60°*
S1-1-14-50-35-17-B	M14x1,5x35 schwarz | *black*	SW17	Kegel 60° | *Taper Head 60°*
S1-1-14-50-40-17-B	M14x1,5x40 schwarz | *black*	SW17	Kegel 60° | *Taper Head 60°*
S1-1-14-50-45-17-B	M14x1,5x45 schwarz | *black*	SW17	Kegel 60° | *Taper Head 60°*
S1-1-14-50-50-17-B	M14x1,5x50 schwarz | *black*	SW17	Kegel 60° | *Taper Head 60°*
Spezial-Schrauben 60° M14 für Ferrari | Maserati - entsprechen den Serienschrauben! | ***Special-Studs Taper Head 60° M14 for Ferrari | Maserati - look alike the Original Bolts!***			
S1-1-14-50-62-22	*M14x1,5x62* verchromt | *chrome*	SW22	Kegel 60° | *Taper Head 60°*
S1-1-14-50-65-22	M14x1,5x65 verchromt | *chrome*	SW22	Kegel 60° | *Taper Head 60°*
S1-1-14-50-67-22	M14x1,5x67 verchromt | *chrome*	SW22	Kegel 60° | *Taper Head 60°*
S1-1-14-50-72-22	M14x1,5x72 verchromt | *chrome*	SW22	Kegel 60° | *Taper Head 60°*
Spezial-Schrauben mit losem Kegelbund 60° M14 für Maserati - entsprechen den Serienschrauben! ***Special-Studs with loose taper head 60° M14 for Maserati - look alike the original bolts!***			
S4-1-14-50-36-17	M14x1,5x36 verchromt / *chrome*	SW17	Kegel 60° / Taper-head 60°
S4-1-14-50-41-17	M14x1,5x41 verchromt / *chrome*	SW17	*Kegel 60° / Taper-head 60°*
Spezial-Schrauben 60° M14 für Lamborghini - entsprechen den Serienschrauben! ***Special-Studs taper head 60° M14 for Lamborghini - look alike the original bolts!***			
S1-1-14-50-44-T80	M14x1,5x44 schwarz / *black*	TX80	Kegel 60° / Taper-head 60°
Schrauben mit losem Kegelbund 60° M14 | ***Studs with loose Taper Head 60° M14***			
S4-1-14-50-28-19	M14x1,5x28	SW19	Kegel 60° | *Taper Head 60°*
S4-1-14-50-37-19	M14x1,5x37	SW19	Kegel 60° | *Taper Head 60°*
S4-1-14-50-42-19	M14x1,5x42	SW19	Kegel 60° | *Taper Head 60°*
S4-1-14-50-45-19	M14x1,5x45	SW19	Kegel 60° | *Taper Head 60°*
S4-1-14-50-48-19	M14x1,5x48	SW19	Kegel 60° | *Taper Head 60°*
S4-1-14-50-53-19	M14x1,5x53	SW19	Kegel 60° | *Taper Head 60°*
S4-1-14-50-58-19	M14x1,5x58	SW19	Kegel 60° | *Taper Head 60°*
Kugelbund - Radius r=12 M12 | ***Round Head Bolt - Radius r=12 M12***			
S1-5-12-50-28-17	M12x1,5x28	SW17	Kugel r=12 | *Round Head r=12*
S1-5-12-50-30-17	M12x1,5x30	SW17	Kugel r=12 | *Round Head r=12*
S1-5-12-50-35-17	M12x1,5x35	SW17	Kugel r=12 | *Round Head r=12*
S1-5-12-50-40-17	M12x1,5x40	SW17	Kugel r=12 | *Round Head r=12*
S1-5-12-50-43-17	M12x1,5x43	SW17	Kugel r=12 | *Round Head r=12*
S1-5-12-50-45-17	M12x1,5x45	SW17	Kugel r=12 | *Round Head r=12*
S1-5-12-50-47-17	M12x1,5x47	SW17	Kugel r=12 | *Round Head r=12*
S1-5-12-50-50-17	M12x1,5x50	SW17	Kugel r=12 | *Round Head r=12*
S1-5-12-50-55-17	M12x1,5x55	SW17	Kugel r=12 | *Round Head r=12*
S1-5-12-50-60-17	M12x1,5x60	SW17	Kugel r=12 | *Round Head r=12*
Kugelbund - Radius r=13 M12 | ***Round Head Bolt - Radius r=13 M12***			
S1-6-12-50-25-17	M12x1,5x25	SW17	Kugel r=13 | *Round Head r=13*
S1-6-12-50-28-17	M12x1,5x28	SW17	Kugel r=13 | *Round Head r=13*
S1-6-12-50-35-17	M12x1,5x35	SW17	Kugel r=13 | *Round Head r=13*
S1-6-12-50-40-17	M12x1,5x40	SW17	Kugel r=13 | *Round Head r=13*
S1-6-12-50-45-17	M12x1,5x45	SW17	Kugel r=13 | *Round Head r=13*
Kugelbund - Radius r=13 M14 | ***Round Head Bolt - Radius r=13 M14***			
S1-6-14-50-27-17	M14x1,5x27	SW17	Kugel r=13 | *Round Head r=13*
S1-6-14-50-30-17	M14x1,5x30	SW17	Kugel r=13 | *Round Head r=13*
S1-6-14-50-32-17	M14x1,5x32	SW17	Kugel r=13 | *Round Head r=13*
S1-6-14-50-35-17	M14x1,5x35	SW17	Kugel r=13 | *Round Head r=13*
S1-6-14-50-37-17	M14x1,5x37	SW17	Kugel r=13 | *Round Head r=13*
S1-6-14-50-40-17	M14x1,5x40	SW17	Kugel r=13 | *Round Head r=13*
S1-6-14-50-43-17	M14x1,5x43	SW17	Kugel r=13 | *Round Head r=13*
S1-6-14-50-47-17	M14x1,5x47	SW17	Kugel r=13 | *Round Head r=13*

Artikelnummer *Part-No.*	Gewinde-Schaftlänge *Thread Length*	Schlüsselweite *Wrench Size*	Bundform *Bolt Head Style | -Size*
Schrauben mit losem Kugelbund - Radius r=13 M14 | ***Studs with loose Round Head - Radius r=13 M14***			
S4-6-14-50-32-17	M14x1,5x32	SW17	Kugel r=13 | *Round Head r=13*
S4-6-14-50-36-17	M14x1,5x36	SW17	Kugel r=13 | *Round Head r=13*
S4-6-14-50-38-17	M14x1,5x38	SW17	Kugel r=13 | *Round Head r=13*
S4-6-14-50-40-17	M14x1,5x40	SW17	Kugel r=13 | *Round Head r=13*
S4-6-14-50-42-17	M14x1,5x42	SW17	Kugel r=13 | *Round Head r=13*
S4-6-14-50-45-17	M14x1,5x45	SW17	Kugel r=13 | *Round Head r=13*
S4-6-14-50-48-17	M14x1,5x48	SW17	Kugel r=13 | *Round Head r=13*
Kugelbund -Radius r=14 M14 | ***Round Head Bolt - Radius r=14 M14***			
S1-7-14-50-27-17	M14x1,5x27	SW17	Kugel r=14 | *Round Head r=14*
S1-7-14-50-35-17	M14x1,5x35	SW17	Kugel r=14 | *Round Head r=14*
S1-7-14-50-40-17	M14x1,5x40	SW17	Kugel r=14 | *Round Head r=14*
S1-7-14-50-43-17	M14x1,5x43	SW17	Kugel r=14 | *Round Head r=14*
S1-7-14-50-45-17	M14x1,5x45	SW17	Kugel r=14 | *Round Head r=14*
S1-7-14-50-47-17	M14x1,5x47	SW17	Kugel r=14 | *Round Head r=14*
S1-7-14-50-50-17	M14x1,5x50	SW17	Kugel r=14 | *Round Head r=14*
S1-7-14-50-55-17	M14x1,5x55	SW17	Kugel r=14 | *Round Head r=14*
S1-7-14-50-60-17	M14x1,5x60	SW17	Kugel r=14 | *Round Head r=14*
S1-7-14-50-65-17	M14x1,5x65	SW17	Kugel r=14 | *Round Head r=14*
Schrauben mit losem Kugelbund - Radius r=14 M14 | ***Studs with loose Round Head - Radius r=14 M14***			
S4-7-14-50-28-17	M14x1,5x28	SW17	Kugel r=14 | *Round Head r=14*
S4-7-14-50-30-17	M14x1,5x30	SW17	Kugel r=14 | *Round Head r=14*
S4-7-14-50-42-17	M14x1,5x42	SW17	Kugel r=14 | *Round Head r=14*
S4-7-14-50-45-17	M14x1,5x45	SW17	Kugel r=14 | *Round Head r=14*
S4-7-14-50-50-17	M14x1,5x50	SW17	Kugel r=14 | *Round Head r=14*
S4-7-14-50-53-17	M14x1,5x53	SW17	Kugel r=14 | *Round Head r=14*
S4-7-14-50-28-19	M14x1,5x28	SW19	Kugel r=14 | *Round Head r=14*
S4-7-14-50-35-19	M14x1,5x35	SW19	Kugel r=14 | *Round Head r=14*
S4-7-14-50-37-19	M14x1,5x37	SW19	Kugel r=14 | *Round Head r=14*
S4-7-14-50-42-19	M14x1,5x42	SW19	Kugel r=14 | *Round Head r=14*
S4-7-14-50-45-19	M14x1,5x45	SW19	Kugel r=14 | *Round Head r=14*
S4-7-14-50-48-19	M14x1,5x48	SW19	Kugel r=14 | *Round Head r=14*
S4-7-14-50-53-19	M14x1,5x53	SW19	Kugel r=14 | *Round Head r=14*
S4-7-14-50-58-19	M14x1,5x58	SW19	Kugel r=14 | *Round Head r=14*
S4-7-14-50-28-19-B	M14x1,5x28 schwarz | *black*	SW19	Kugel r=14 | *Round Head r=14*
S4-7-14-50-30-19-B	M14x1,5x30 schwarz | *black*	SW19	Kugel r=14 | *Round Head r=14*
S4-7-14-50-37-19-B	M14x1,5x37 schwarz | *black*	SW19	Kugel r=14 | *Round Head r=14*
S4-7-14-50-42-19-B	M14x1,5x42 schwarz | *black*	SW19	Kugel r=14 | *Round Head r=14*
S4-7-14-50-45-19-B	M14x1,5x45 schwarz | *black*	SW19	Kugel r=14 | *Round Head r=14*
S4-7-14-50-48-19-B	M14x1,5x48 schwarz | *black*	SW19	Kugel r=14 | *Round Head r=14*
S4-7-14-50-53-19-B	M14x1,5x53 schwarz | *black*	SW19	Kugel r=14 | *Round Head r=14*
S4-7-14-50-58-19-B	M14x1,5x58 schwarz | *black*	SW19	Kugel r=14 | *Round Head r=14*
Flachbundschrauben | ***Flat Head Bolt***			
S1-9-12-25-42-19	M12x1,25x42	SW19	Flachbund m. Scheibe | *Flat Head with washer*
S1-9-12-25-52-19	M12x1,25x52	SW19	Flachbund m. Scheibe | *Flat Head with washer*
S1-9-12-25-57-19	M12x1,25x57	SW19	Flachbund m. Scheibe | *Flat Head with washer*
S1-9-14-50-43-19	M14x1,5x43	SW19	Flachbund | *Flat-head*
S1-9-14-50-52-19	M14x1,5x52	SW19	Flachbund | *Flat-head*
S1-9-14-50-60-19	M14x1,5x60	SW19	Flachbund | *Flat-head*
S1-9-14-50-63-19	M14x1,5x63	SW19	Flachbund | *Flat-head*
S1-9-14-50-68-19	M14x1,5x68	SW19	Flachbund | *Flat-head*
Flachbundschrauben für Citroen | Peugeot | ***Flat-head for Citroen | Peugeot***			
S1-9-12-25-35-17	M12x1,25x35	SW17	Flachbund | *Flat-head*
S1-9-12-25-40-17	M12x1,25x40	SW17	Flachbund | *Flat-head*
S1-9-12-25-45-17	M12x1,25x45	SW17	Flachbund | *Flat-head*
S1-9-12-25-50-17	M12x1,25x50	SW17	Flachbund | *Flat-head*
S1-9-12-25-55-17	M12x1,25x55	SW17	Flachbund | *Flat-head*
S1-9-12-50-33-17	M12x1,50x33	SW17	Flachbund | *Flat-head*
S1-9-12-50-37-17	M12x1,50x37	SW17	Flachbund | *Flat-head*
S1-9-12-50-43-17	M12x1,50x43	SW17	Flachbund | *Flat-head*
S1-9-12-50-48-17	M12x1,50x48	SW17	Flachbund | *Flat-head*
S1-9-12-50-53-17	M12x1,50x53	SW17	Flachbund | *Flat-head*
Muttern | ***Nuts***			
S2-1-12-25-17-17-O	M12x1,25x18,5 offen | *open*	SW17	Kegel 60° | *Taper Head 60°*
S2-1-12-25-17-19-O	M12x1,25x17 offen | *open*	SW19	Kegel 60° | *Taper Head 60°*
S2-1-12-25-32-19-G	M12x1,25x32 geschlossen | *closed*	SW19	Kegel 60° | *Taper Head 60°*
S2-1-12-50-17-17-O	M12x1,5x18,5 offen | *open*	SW17	Kegel 60° | *Taper Head 60°*
S2-1-12-50-17-19-O	M12x1,5x17 offen | *open*	SW19	Kegel 60° | *Taper Head 60°*
S2-1-12-50-25-19-O	M12x1,5x25 offen | *open*	SW19	Kegel 60° | *Taper Head 60°*
S2-1-12-50-32-19-G	M12x1,5x32 geschlossen | *closed*	SW19	Kegel 60° | *Taper Head 60°*

Artikelnummer *Part-No.*	Gewinde-Schaftlänge *Thread Length*	Schlüsselweite *Wrench Size*	Bundform *Bolt Head Style | -Size*
Muttern | ***Nuts***			
S2-1-13-20-17-17-O	1/2" UNFx18,5 offen | *open*	SW17	Kegel 60° | *Taper Head 60°*
S2-1-13-20-17-19-O	1/2" UNFx17,5 offen | *open*	SW19	Kegel 60° | *Taper Head 60°*
S2-1-13-20-25-19-O	1/2" UNFx25 offen | *open*	SW19	Kegel 60° | *Taper Head 60°*
S2-1-14-02-17-19-O	M14x2x25 offen | *open*	SW19	Kegel 60° | *Taper Head 60°*
S2-1-14-50-17-19-O	M14x1,5x17 offen | *open*	SW19	Kegel 60° | *Taper Head 60°*
S2-1-14-50-25-19-O	M14x1,5x25 offen | *open*	SW19	Kegel 60° | *Taper Head 60°*
S2-5-12-50-19-19-O	M12x1,5x19 offen | *open*	SW19	Kugel r=12 | *Round Head r=12*
S2-7-14-50-20-19-O	M14x1,5x20 offen | *open*	SW19	Kugel r=14 | *Round Head r=14*
S2-7-14-50-32-19-G	M14x1,5x32 geschlossen | *closed*	SW19	Kugel r=14 | *Round Head r=14*
Rändelbolzen | ***Wheel Studs***			
S3-0-12-50-65-121	M12x1,50x65	Rändel | *knurl* 12,1	
S3-0-12-25-47-124	M12x1,25x47	Rändel | *knurl* 12,4	
S3-0-12-25-52-124	M12x1,25x52	Rändel | *knurl* 12,4	
S3-0-12-25-57-124	M12x1,25x57	Rändel | *knurl* 12,4	
S3-0-12-25-62-124	M12x1,25x62	Rändel | *knurl* 12,4	
S3-0-12-25-43-130	M12x1,25x43	Rändel | *knurl* 13,0	
S3-0-12-25-48-130	M12x1,25x48	Rändel | *knurl* 13,0	
S3-0-12-25-53-130	M12x1,25x53	Rändel | *knurl* 13,0	
S3-0-12-25-58-130	M12x1,25x58	Rändel | *knurl* 13,0	
S3-0-12-25-63-130	M12x1,25x63	Rändel | *knurl* 13,0	
S3-0-12-50-47-124	M12x1,5x47	Rändel | *knurl* 12,4	
S3-0-12-50-52-124	M12x1,5x52	Rändel | *knurl* 12,4	
S3-0-12-50-57-124	M12x1,5x57	Rändel | *knurl* 12,4	
S3-0-12-50-62-124	M12x1,5x62	Rändel | *knurl* 12,4	
S3-0-12-50-42-127	M12x1,5x42	Rändel | *knurl* 12,4	
S3-0-12-50-42-130	M12x1,5x42	Rändel | *knurl* 13,0	
S3-0-12-50-52-130	M12x1,5x52	Rändel | *knurl* 13,0	
S3-0-12-50-55-130	M12x1,5x55	Rändel | *knurl* 13,0	
S3-1-12-50-55-130	M12x1,5x55	Rändel | *knurl* 13,0	Kurze Rändelung | *Short knurl*
S3-0-12-50-62-130	M12x1,5x62	Rändel | *knurl* 13,0	
S3-1-12-50-62-130	M12x1,5x62	Rändel | *knurl* 13,0	Kurze Rändelung | *Short knurl*
S3-0-12-50-65-130	M12x1,5x65	Rändel | *knurl* 13,0	
S3-0-13-20-39-140	1/2" UNFx39	Rändel | *knurl* 14,0	
S3-1-12-25-37-143	M12x1,25x37	Rändel | *knurl* 14,3	Kurze Rändelung | *Short knurl*
S3-0-12-25-40-143	M12x1,25x40	Rändel | *knurl* 14,3	
S3-1-12-25-42-143	M12x1,25x42	Rändel | *knurl* 14,3	Kurze Rändelung | *Short knurl*
S3-0-12-25-47-143	M12x1,25x47	Rändel | *knurl* 14,3	
S3-0-12-25-52-143	M12x1,25x52	Rändel | *knurl* 14,3	
S3-0-12-25-57-143	M12x1,25x57	Rändel | *knurl* 14,3	
S3-0-12-25-62-143	M12x1,25x62	Rändel | *knurl* 14,3	
S3-1-12-50-37-143	M12x1,5x37	Rändel | *knurl* 14,3	Kurze Rändelung | *Short knurl*
S3-0-12-50-42-143	M12x1,5x42	Rändel | *knurl* 14,3	
S3-1-12-50-42-143	M12x1,5x42	Rändel | *knurl* 14,3	Kurze Rändelung | *Short knurl*
S3-0-12-50-47-143	M12x1,5x47	Rändel | *knurl* 14,3	
S3-0-12-50-52-143	M12x1,5x52	Rändel | *knurl* 14,3	
S3-0-12-50-57-143	M12x1,5x57	Rändel | *knurl* 14,3	
S3-0-12-50-62-143	M12x1,5x62	Rändel | *knurl* 14,3	
S3-0-12-50-47-149	M12x1,5x47	Rändel | *knurl* 14,9	
S3-0-12-50-52-149	M12x1,5x52	Rändel | *knurl* 14,9	
S3-0-12-50-57-149	M12x1,5x57	Rändel | *knurl* 14,9	
S3-0-12-50-62-149	M12x1,5x62	Rändel | *knurl* 14,9	
S3-1-14-50-36-149	M14x1,5x36	Rändel | *knurl* 14,9	Kurze Rändelung | *Short knurl*
S3-0-14-50-45-149	M14x1,5x45	Rändel | *knurl* 14,9	
S3-0-14-50-66-149	M14x1,5x66	Rändel | *knurl* 14,9	
S3-1-14-50-65-157	M14x1,5x65	Rändel | *knurl* 15,7	Kurze Rändelung | *Short knurl*
S3-0-13-20-39-157	1/2" UNFx39	Rändel | *knurl* 15,7	
S3-0-13-20-46-157	1/2" UNFx46	Rändel | *knurl* 15,7	
S3-1-14-50-65-157	1/2" UNFx46	Rändel | *knurl* 15,7	
S3-0-14-50-39-159	M14x1,5x39	Rändel | *knurl* 15,9	
S3-0-14-02-38-159	M14x2x38	Rändel | *knurl* 15,9	
S3-0-14-02-53-159	M14x2x53	Rändel | *knurl* 15,9	

Artikelnummer *Part-No.*	Breite *Width*	Schlüsselweite *Wrench Size*	Beschreibung *Description*
Abdeckkappen für Radschrauben | ***Caps for Wheel Bolts***			
S17-B		für SW17 | *for* SW17	Abdeckkappe schwarz | *cap black*
S17-G		für SW17 | *for* SW17	Abdeckkappe grau | *cap grey*
S19-B		für SW19 | *for* SW19	Abdeckkappe schwarz | *cap black*
Steckschlüsseladapter | ***Socket Wrench Adapter***			
S03-09-012		SW19 - SW17	Adapter von SW19 auf SW17
S03-09-014		SW21 - SW19	Adapter von SW21 auf SW19
Radabdeckung inkl. Befestigungmaterial | ***Wheel arch extension incl. mounting material***			
VT540-S	10 mm - 13 mm	Länge | length 210 mm	Radabdeckung-Set "klein" | *splash guards "small"*
VT540-L	18 mm - 20 mm	Länge | length 210 mm	Radabdeckung-Set "groß" | *splash guards "large"*

DEKRA
18
ADAC
DEKRA
7
ADAC
DEKRA
10
ADAC
Elbach
motopark

Modell | *Model*	Baujahr | *Year*	Original-radschraube (nicht bestellbar) | *Original Bolt (not available)*	Spurweiten-änd. Achse | *Total track widening* (mm)	Eibach System	Artikel-Nr. silber | *Part-No. silver*	Artikel-Nr. schwarz | *Part-No. black*	Hinweise | *Notes*	Kennzeichnung | *Stamping*	Lochkreis | - Anzahl | *Bolt pattern* | *No. of holes*	Zentrierung | *Centre bore* (mm)	Gewinde | *Thread*	Gutachten | *Homologation*	ET-Grenze | *Offset frontier*
ALFA ROMEO													
145 (930)													
	07.94 - 01.01	S1-1-12-25-36-19	10	1	S90-1-05-011			91105011	98/4	58	M12x1,25	§21	
	07.94 - 01.01	M12x1,25x36, KG60°	30	2	S90-2-15-020			91215020	98/4	58	M12x1,25	§21	
	07.94 - 01.01		50	7	S90-7-25-006			91725006	98/4	58	M12x1,25	§21	
146 (930)													
	12.94 - 01.01	S1-1-12-25-36-19	10	1	S90-1-05-011			91105011	98/4	58	M12x1,25	§21	
	12.94 - 01.01	M12x1,25x36, KG60°	30	2	S90-2-15-020			91215020	98/4	58	M12x1,25	§21	
	12.94 - 01.01		50	7	S90-7-25-006			91725006	98/4	58	M12x1,25	§21	
147 (937)													
	01.00 - 03.10	S1-1-12-25-22-17	10	1	S90-1-05-015			91105015	98/5	58	M12x1,25	T	17
	01.00 - 03.10	M12x1,25x22, KG60°	20	2	S90-2-10-003		S26	91210003	98/5	58	M12x1,25	T	17
	01.00 - 03.10		30	2	S90-2-15-003			91215003	98/5	58	M12x1,25	T	17
	01.00 - 03.10		40	7	S90-7-20-019			91720019	98/5	58	M12x1,25	T	17
	01.00 - 03.10		50	7	S90-7-25-022			91725022	98/5	58	M12x1,25	T	17
155 (167)													
	01.92 - 12.97	S1-1-12-25-36-19	10	1	S90-1-05-011			91105011	98/4	58	M12x1,25	§21	
	01.92 - 12.97	M12x1,25x36, KG60°	30	2	S90-2-15-020			91215020	98/4	58	M12x1,25	§21	
	01.92 - 12.97		50	7	S90-7-25-006			91725006	98/4	58	M12x1,25	§21	
156 (932)													
	01.00 - 05.06	S1-1-12-25-30-19	10	1	S90-1-05-015		S11	91105015	98/5	58	M12x1,25	T	22,5
	01.00 - 05.06	M12x1,25x30, KG60°	20	2	S90-2-10-003		S26	91210003	98/5	58	M12x1,25	T	22,5
	01.00 - 05.06		30	2	S90-2-15-003			91215003	98/5	58	M12x1,25	T	22,5
156 Sportwagon (932)													
	05.00 - 05.06	S1-1-12-25-30-19	10	1	S90-1-05-015		S11	91105015	98/5	58	M12x1,25	T	22,5
	05.00 - 05.06	M12x1,25x30, KG60°	20	2	S90-2-10-003		S26	91210003	98/5	58	M12x1,25	T	22,5
	05.00 - 05.06		30	2	S90-2-15-003			91215003	98/5	58	M12x1,25	T	22,5
159 (939)													
	09.05 - 11.11	S1-1-14-50-25-17	10	1	S90-1-05-013			91105013	110/5	65	M14x1,5	T	4
	09.05 - 11.11	M14x1,5x25, KG60°	32	2	S90-2-16-001			91216001	110/5	65	M14x1,5	T	4
	09.05 - 11.11		40	2	S90-2-20-006			91220006	110/5	65	M14x1,5	T	4
	09.05 - 11.11		40	7	S90-7-20-024			91720024	110/5	65	M14x1,5	T	4
159 Sportwagon (939)													
	03.06 - 11.11	S1-1-14-50-25-17	10	1	S90-1-05-013			91105013	110/5	65	M14x1,5	T	4
	03.06 - 11.11	M14x1,5x25, KG60°	32	2	S90-2-16-001			91216001	110/5	65	M14x1,5	T	4
	03.06 - 11.11		40	2	S90-2-20-006			91220006	110/5	65	M14x1,5	T	4
	03.06 - 11.11		40	7	S90-7-20-024			91720024	110/5	65	M14x1,5	T	4
164 (164)													
	06.87 - 09.98	S1-1-12-25-36-19	20	2	S90-2-10-003			91210003	98/5	58	M12x1,25	§21	
	06.87 - 09.98	M12x1,25x36, KG60°	30	2	S90-2-15-003			91215003	98/5	58	M12x1,25	§21	
164 (164)													
	01.87 - 09.98	S1-1-12-25-36-19	10	1	S90-1-05-011			91105011	98/4	58	M12x1,25	§21	
	01.87 - 09.98	M12x1,25x36, KG60°	30	2	S90-2-15-020			91215020	98/4	58	M12x1,25	§21	
	01.87 - 09.98		50	7	S90-7-25-006			91725006	98/4	58	M12x1,25	§21	
166 (936)													
	09.98 - 06.07		10	1	S90-1-05-015			91105015	108/5	58	M12x1,25	T	26
	09.98 - 06.07		30	2	S90-2-15-003			91215003	108/5	58	M12x1,25	T	26
4C (960)													
	03.13 -	S1-1-12-25-24-17	20	2	S90-2-10-039	S90-2-10-039-B	S3, S77	91210039	98/5	58	M12x1,25	T	18
	03.13 -	M12x1,25x24, KG60°	30	2	S90-2-15-057	S90-2-15-057-B		91215057	98/5	58	M12x1,25	T	18
4C Spider (961)													
	10.14 -	S1-1-12-25-24-17	20	2	S90-2-10-039	S90-2-10-039-B	S3, S77	91210039	98/5	58	M12x1,25	T	18
	10.14 -	M12x1,25x24, KG60°	30	2	S90-2-15-057	S90-2-15-057-B		91215057	98/5	58	M12x1,25	T	18
BRERA													
	01.06 -	S1-1-14-50-25-17	10	1	S90-1-05-013			91105013	110/5	65	M14x1,5	T	4
	01.06 -	M14x1,5x25, KG60°	32	2	S90-2-16-001			91216001	110/5	65	M14x1,5	T	4
	01.06 -		40	2	S90-2-20-006			91220006	110/5	65	M14x1,5	T	4
	01.06 -		40	7	S90-7-20-024			91720024	110/5	65	M14x1,5	T	4
GIULIETTA (940)													
	04.10 -	S1-1-12-25-22-17	30	2	S90-2-15-007			91215007	110/5	65	M12x1,25	T	11
	04.10 -	M12x1,25x22, KG60°	32	2	S90-2-16-001			91216001	110/5	65	M12x1,25	T	11
	04.10 -		40	2	S90-2-20-006			91220006	110/5	65	M12x1,25	T	11
	04.10 -		40	7	S90-7-20-034			91720034	110/5	65	M12x1,25	T	11
	04.10 -		50	7	S90-7-25-046			91725046	110/5	65	M12x1,25	T	11
	04.10 -		60	7	S90-7-30-054			91730054	110/5	65	M12x1,25	T	11
GT (937)													
	11.03 - 09.10	S1-1-12-25-22-17	10	1	S90-1-05-015			91105015	98/5	58	M12x1,25	T	17
	11.03 - 09.10	M12x1,25x22, KG60°	20	2	S90-2-10-003		S54	91210003	98/5	58	M12x1,25	T	17
	11.03 - 09.10		30	2	S90-2-15-003			91215003	98/5	58	M12x1,25	T	17
	11.03 - 09.10		40	7	S90-7-20-019			91720019	98/5	58	M12x1,25	T	17
	11.03 - 09.10		50	7	S90-7-25-022			91725022	98/5	58	M12x1,25	T	17
GTV (916C_)													
	09.94 - 10.05	S1-1-12-25-34-19	10	1	S90-1-05-015			91105015	98/5	58	M12x1,25	§21	
	09.94 - 10.05	M12x1,25x34, KG60°	20	2	S90-2-10-003		S3	91210003	98/5	58	M12x1,25	T	15
	09.94 - 10.05		30	2	S90-2-15-003		S13	91215003	98/5	58	M12x1,25	T	15
MITO (955)													
	09.08 -	S1-1-12-25-22-17	10	1	S90-1-05-011			91105011	98/4	58	M12x1,25	T	9
	09.08 -	M12x1,25x22, KG60°	30	2	S90-2-15-020			91215020	98/4	58	M12x1,25	T	9
	09.08 -		40	7	S90-7-20-012			91720012	98/4	58	M12x1,25	T	9
	09.08 -		50	7	S90-7-25-006			91725006	98/4	58	M12x1,25	T	9
	09.08 -		60	7	S90-7-30-005			91730005	98/4	58	M12x1,25	T	9
SPIDER (916S_)													
	09.94 - 04.05	S1-1-12-25-36-19	10	1	S90-1-05-015			91105015	98/5	58	M12x1,25	§21	
	09.94 - 04.05	M12x1,25x36, KG60°	20	2	S90-2-10-003		S3	91210003	98/5	58	M12x1,25	T	15
	09.94 - 04.05		30	2	S90-2-15-003			91215003	98/5	58	M12x1,25	T	15
SPIDER (939)													
	09.06 -	S1-1-14-50-25-17	10	1	S90-1-05-013			91105013	110/5	65	M14x1,5	T	4
	09.06 -	M14x1,5x25, KG60°	32	2	S90-2-16-001			91216001	110/5	65	M14x1,5	T	4
	09.06 -		40	2	S90-2-20-006			91220006	110/5	65	M14x1,5	T	4
	09.06 -		40	7	S90-7-20-024			91720024	110/5	65	M14x1,5	T	4
AUDI													
80 (8C, B4)													
	09.91 - 12.94	S1-6-14-50-27-17	10	1	S90-1-05-010		S11	91105010	108/4	57	M14x1,5	§21	
	09.91 - 12.94	M14x1,5x27, KU r=13	16	1	S90-1-08-003		S11	91108003	108/4	57	M14x1,5	§21	
	09.91 - 12.94		30	2	S90-2-15-004		S13	91215004	108/4	57	M14x1,5	§21	
	09.91 - 12.94		40	2	S90-2-20-011		S13	91220011	108/4	57	M14x1,5	§21	
80 Avant (8C, B4)													
80 Station Wagon (8C, B4)	09.91 - 01.96	S1-6-14-50-27-17	10	1	S90-1-05-010		S11	91105010	108/4	57	M14x1,5	§21	
	09.91 - 01.96	M14x1,5x27, KU r=13	16	1	S90-1-08-003		S11	91108003	108/4	57	M14x1,5	§21	
	09.91 - 01.96		30	2	S90-2-15-004		S13	91215004	108/4	57	M14x1,5	§21	
	09.91 - 01.96		40	2	S90-2-20-011		S13	91220011	108/4	57	M14x1,5	§21	

Modell | *Model*	Baujahr | *Year*	Original-radschraube (nicht bestellbar) | *Original Bolt (not available)*	Spurweiten-änd. Achse | *Total track widening* (mm)	Eibach System	Artikel-Nr. silber | *Part-No. silver*	Artikel-Nr. schwarz | *Part-No. black*	Hinweise | *Notes*	Kennzeichnung | *Stamping*	Lochkreis | - Anzahl | *Bolt pattern* | *No. of holes*	Zentrierung | *Centre bore* (mm)	Gewinde | *Thread*	Gutachten | *Homologation*	ET-Grenze | *Offset frontier*
AUDI													
80 Cabriolet (8G7, B4)													
80 Convertible (8G7, B4)	05.91 - 08.00	S1-6-14-50-27-17	10	1	S90-1-05-010		S11	91105010	108/4	57	M14x1,5	§21	
	05.91 - 08.00	M14x1,5x27, KU r=13	16	1	S90-1-08-003		S11	91108003	108/4	57	M14x1,5	§21	
	05.91 - 08.00		30	2	S90-2-15-004		S13	91215004	108/4	57	M14x1,5	§21	
	05.91 - 08.00		40	2	S90-2-20-011		S13	91220011	108/4	57	M14x1,5	§21	
80 COUPE (81, 85)													
	06.86 - 12.96	S1-6-14-50-27-17	10	1	S90-1-05-010		S11	91105010	108/4	57	M14x1,5	§21	
	06.86 - 12.96	M14x1,5x27, KU r=13	16	1	S90-1-08-003		S11	91108003	108/4	57	M14x1,5	§21	
	06.86 - 12.96		30	2	S90-2-15-004		S13	91215004	108/4	57	M14x1,5	§21	
	06.86 - 12.96		40	2	S90-2-20-011		S13	91220011	108/4	57	M14x1,5	§21	
A1 (8X1)													
	05.10 -	S1-6-14-50-27-17	20	2	S90-2-10-034		S3	91210034	100/5	57	M14x1,5	T	-1
	05.10 -	M14x1,5x27, KU r=13	24	2	S90-2-12-013		S71	91212013	100/5	57	M14x1,5	T	-1
	05.10 -		30	2	S90-2-15-005			91215005	100/5	57	M14x1,5	T	-1
	05.10 -		40	2	S90-2-20-004			91220004	100/5	57	M14x1,5	T	-1
	05.10 -		40	7	S90-7-20-028			91720028	100/5	57	M14x1,5	T	-1
	05.10 -		50	7	S90-7-25-003			91725003	100/5	57	M14x1,5	T	-1
A1 Sportback (8XA)													
	09.11 -	S1-6-14-50-27-17	20	2	S90-2-10-034		S3	91210034	100/5	57	M14x1,5	T	-1
	09.11 -	M14x1,5x27, KU r=13	24	2	S90-2-12-013		S71	91212013	100/5	57	M14x1,5	T	-1
	09.11 -		30	2	S90-2-15-005			91215005	100/5	57	M14x1,5	T	-1
	09.11 -		40	2	S90-2-20-004			91220004	100/5	57	M14x1,5	T	-1
	09.11 -		40	7	S90-7-20-028			91720028	100/5	57	M14x1,5	T	-1
	09.11 -		50	7	S90-7-25-003			91725003	100/5	57	M14x1,5	T	-1
A2 (8Z0)													
	02.00 - 08.05	S1-6-14-50-27-17	10	1	S90-1-05-006		S11	91105006	100/5	57	M14x1,5	T	13
	02.00 - 08.05	M14x1,5x27, KU r=13	16	1	S90-1-08-001		S11	91108001	100/5	57	M14x1,5	T	13
	02.00 - 08.05		30	2	S90-2-15-005			91215005	100/5	57	M14x1,5	T	13
	02.00 - 08.05		40	2	S90-2-20-004			91220004	100/5	57	M14x1,5	T	13
	02.00 - 08.05		50	7	S90-7-25-003			91725003	100/5	57	M14x1,5	T	13
A3 (8L1)													
	09.96 - 05.03	S1-6-14-50-27-17	10	1	S90-1-05-006		S11	91105006	100/5	57	M14x1,5	T	15
	09.96 - 05.03	M14x1,5x27, KU r=13	16	1	S90-1-08-001		S11	91108001	100/5	57	M14x1,5	T	15
	09.96 - 05.03		30	2	S90-2-15-005			91215005	100/5	57	M14x1,5	T	15
	09.96 - 05.03		40	2	S90-2-20-004			91220004	100/5	57	M14x1,5	T	15
	09.96 - 05.03		50	7	S90-7-25-003			91725003	100/5	57	M14x1,5	T	15
A3 (8P1)													
	05.03 - 08.12	S1-6-14-50-27-17	20	2	S90-2-10-027		S74	91210027	112/5	57	M14x1,5	T	18
	05.03 - 08.12	M14x1,5x27, KU r=13	24	2	S90-2-12-003			91212003	112/5	57	M14x1,5	T	18
	05.03 - 08.12		30	2	S90-2-15-013			91215013	112/5	57	M14x1,5	T	18
	05.03 - 08.12		40	2	S90-2-20-003			91220003	112/5	57	M14x1,5	T	18
	05.03 - 08.12		40	7	S90-7-20-017			91720017	112/5	57	M14x1,5	T	18
	05.03 - 08.12		50	7	S90-7-25-005			91725005	112/5	57	M14x1,5	T	18
	05.03 - 08.12		60	7	S90-7-30-012			91730012	112/5	57	M14x1,5	T	18
A3 (8V1)													
	04.12 -	S1-6-14-50-27-17	20	2	S90-2-10-027		S74	91210027	112/5	57	M14x1,5	T	21
	04.12 -	M14x1,5x27, KU r=13	24	2	S90-2-12-003			91212003	112/5	57	M14x1,5	T	21
	04.12 -		30	2	S90-2-15-013			91215013	112/5	57	M14x1,5	T	21
	04.12 -		40	2	S90-2-20-003			91220003	112/5	57	M14x1,5	T	21
	04.12 -		40	7	S90-7-20-017			91720017	112/5	57	M14x1,5	T	21
	04.12 -		50	7	S90-7-25-005			91725005	112/5	57	M14x1,5	T	21
	04.12 -		60	7	S90-7-30-012			91730012	112/5	57	M14x1,5	T	21
A3 Cabriolet (8P7)													
A3 Convertible (8P7)	04.08 - 05.13	S1-6-14-50-27-17	20	2	S90-2-10-027		S74	91210027	112/5	57	M14x1,5	T	18
	04.08 - 05.13	M14x1,5x27, KU r=13	24	2	S90-2-12-003			91212003	112/5	57	M14x1,5	T	18
	04.08 - 05.13		30	2	S90-2-15-013			91215013	112/5	57	M14x1,5	T	18
	04.08 - 05.13		40	2	S90-2-20-003			91220003	112/5	57	M14x1,5	T	18
	04.08 - 05.13		40	7	S90-7-20-017			91720017	112/5	57	M14x1,5	T	18
	04.08 - 05.13		50	7	S90-7-25-005			91725005	112/5	57	M14x1,5	T	18
	04.08 - 05.13		60	7	S90-7-30-012			91730012	112/5	57	M14x1,5	T	18
A3 Cabriolet (8V7)													
A3 Convertible (8V7)	10.13 -	S1-6-14-50-27-17	20	2	S90-2-10-027		S74	91210027	112/5	57	M14x1,5	T	21
	10.13 -	M14x1,5x27, KU r=13	24	2	S90-2-12-003			91212003	112/5	57	M14x1,5	T	21
	10.13 -		30	2	S90-2-15-013			91215013	112/5	57	M14x1,5	T	21
	10.13 -		40	2	S90-2-20-003			91220003	112/5	57	M14x1,5	T	21
	10.13 -		40	7	S90-7-20-017			91720017	112/5	57	M14x1,5	T	21
	10.13 -		50	7	S90-7-25-005			91725005	112/5	57	M14x1,5	T	21
	10.13 -		60	7	S90-7-30-012			91730012	112/5	57	M14x1,5	T	21
A3 Limousine (8VS)													
A3 Sedan (8VS)	05.13 -	S1-6-14-50-27-17	20	2	S90-2-10-027		S74	91210027	112/5	57	M14x1,5	T	21
	05.13 -	M14x1,5x27, KU r=13	24	2	S90-2-12-003			91212003	112/5	57	M14x1,5	T	21
	05.13 -		30	2	S90-2-15-013			91215013	112/5	57	M14x1,5	T	21
	05.13 -		40	2	S90-2-20-003			91220003	112/5	57	M14x1,5	T	21
	05.13 -		40	7	S90-7-20-017			91720017	112/5	57	M14x1,5	T	21
	05.13 -		50	7	S90-7-25-005			91725005	112/5	57	M14x1,5	T	21
	05.13 -		60	7	S90-7-30-012			91730012	112/5	57	M14x1,5	T	21
A3 Sportback (8PA)													
	09.04 - 03.13	S1-6-14-50-27-17	20	2	S90-2-10-027		S74	91210027	112/5	57	M14x1,5	T	18
	09.04 - 03.13	M14x1,5x27, KU r=13	24	2	S90-2-12-003			91212003	112/5	57	M14x1,5	T	18
	09.04 - 03.13		30	2	S90-2-15-013			91215013	112/5	57	M14x1,5	T	18
	09.04 - 03.13		40	2	S90-2-20-003			91220003	112/5	57	M14x1,5	T	18
	09.04 - 03.13		40	7	S90-7-20-017			91720017	112/5	57	M14x1,5	T	18
	09.04 - 03.13		50	7	S90-7-25-005			91725005	112/5	57	M14x1,5	T	18
	09.04 - 03.13		60	7	S90-7-30-012			91730012	112/5	57	M14x1,5	T	18
A3 Sportback (8VA)													
	09.12 -	S1-6-14-50-27-17	20	2	S90-2-10-027		S74	91210027	112/5	57	M14x1,5	T	21
	09.12 -	M14x1,5x27, KU r=13	24	2	S90-2-12-003			91212003	112/5	57	M14x1,5	T	21
	09.12 -		30	2	S90-2-15-013			91215013	112/5	57	M14x1,5	T	21
	09.12 -		40	2	S90-2-20-003			91220003	112/5	57	M14x1,5	T	21
	09.12 -		40	7	S90-7-20-017			91720017	112/5	57	M14x1,5	T	21
	09.12 -		50	7	S90-7-25-005			91725005	112/5	57	M14x1,5	T	21
	09.12 -		60	7	S90-7-30-012			91730012	112/5	57	M14x1,5	T	21
A4 (8D2, B5)													
	11.94 - 09.01	S1-6-14-50-27-17	10	1	S90-1-05-006		S11	91105006	112/5	57	M14x1,5	T	25
	11.94 - 09.01	M14x1,5x27, KU r=13	16	1	S90-1-08-001		S11	91108001	112/5	57	M14x1,5	T	25
	11.94 - 09.01		30	2	S90-2-15-005		S13	91215005	112/5	57	M14x1,5	T	25
	11.94 - 09.01		40	2	S90-2-20-004		S13	91220004	112/5	57	M14x1,5	T	25
	11.94 - 09.01		50	7	S90-7-25-005			91725005	112/5	57	M14x1,5	T	25

Modell | *Model*	Baujahr | *Year*	Original-radschraube (nicht bestellbar) | *Original Bolt (not available)*	Spurweiten-änd. Achse | *Total track widening* (mm)	Eibach System	Artikel-Nr. silber | *Part-No. silver*	Artikel-Nr. schwarz | *Part-No. black*	Hinweise | *Notes*	Kennzeichnung | *Stamping*	Lochkreis | - Anzahl | *Bolt pattern* | *No. of holes*	Zentrierung | *Centre bore* (mm)	Gewinde | *Thread*	Gutachten | *Homologation*	ET-Grenze | *Offset frontier*
AUDI													
A4 (8E2, B6)													
	11.00 - 12.04	S1-6-14-50-27-17	10	1	S90-1-05-016		S11	91105016	112/5	57	M14x1,5	T	19
	11.00 - 12.04	M14x1,5x27, KU r=13	16	1	S90-1-08-002		S11	91108002	112/5	57	M14x1,5	T	19
	11.00 - 12.04		20	2	S90-2-10-027		S74	91210027	112/5	57	M14x1,5	T	19
	11.00 - 12.04		24	2	S90-2-12-003		S3	91212003	112/5	57	M14x1,5	T	19
	11.00 - 12.04		30	2	S90-2-15-013			91215013	112/5	57	M14x1,5	T	19
	11.00 - 12.04		40	2	S90-2-20-003			91220003	112/5	57	M14x1,5	T	19
	11.00 - 12.04		40	7	S90-7-20-017			91720017	112/5	57	M14x1,5	T	19
	11.00 - 12.04		50	7	S90-7-25-005			91725005	112/5	57	M14x1,5	T	19
A4 (8EC, B7)													
	11.04 - 06.08	S1-6-14-50-27-17	10	1	S90-1-05-016		S11	91105016	112/5	57	M14x1,5	T	19
	11.04 - 06.08	M14x1,5x27, KU r=13	16	1	S90-1-08-002		S11	91108002	112/5	57	M14x1,5	T	19
	11.04 - 06.08		20	2	S90-2-10-027		S3	91210027	112/5	57	M14x1,5	T	19
	11.04 - 06.08		24	2	S90-2-12-003		S3	91212003	112/5	57	M14x1,5	T	19
	11.04 - 06.08		30	2	S90-2-15-013			91215013	112/5	57	M14x1,5	T	19
	11.04 - 06.08		40	2	S90-2-20-003			91220003	112/5	57	M14x1,5	T	19
	11.04 - 06.08		40	7	S90-7-20-017			91720017	112/5	57	M14x1,5	T	19
	11.04 - 06.08		50	7	S90-7-25-005			91725005	112/5	57	M14x1,5	T	19
A4 (8K2, B8)													
	11.07 -	S1-6-14-50-27-17	24	2	S90-2-12-004	S90-2-12-004-B	S3	91212004	112/5	66,45	M14x1,5	T	9
	11.07 -	M14x1,5x27, KU r=13	30	2	S90-2-15-017	S90-2-15-017-B		91215017	112/5	66,45	M14x1,5	T	9
	11.07 -		40	2	S90-2-20-007	S90-2-20-007-B		91220007	112/5	66,45	M14x1,5	T	9
	11.07 -		40	7	S90-7-20-016	S90-7-20-016-B		91720016	112/5	66,45	M14x1,5	T	9
	11.07 -		50	7	S90-7-25-016			91725016	112/5	66,45	M14x1,5	T	9
	11.07 -		60	7	S90-7-30-007			91730007	112/5	66,45	M14x1,5	T	9
A4 Allroad (8KH, B8)													
	04.09 -	S1-6-14-50-27-17	24	2	S90-2-12-004	S90-2-12-004-B	S3	91212004	112/5	66,45	M14x1,5	T	9
	04.09 -	M14x1,5x27, KU r=13	30	2	S90-2-15-017	S90-2-15-017-B		91215017	112/5	66,45	M14x1,5	T	9
	04.09 -		40	2	S90-2-20-007	S90-2-20-007-B		91220007	112/5	66,45	M14x1,5	T	9
	04.09 -		40	7	S90-7-20-016	S90-7-20-016-B		91720016	112/5	66,45	M14x1,5	T	9
	04.09 -		50	7	S90-7-25-016			91725016	112/5	66,45	M14x1,5	T	9
	04.09 -		60	7	S90-7-30-007			91730007	112/5	66,45	M14x1,5	T	9
A4 Avant (8D5, B5)													
A4 Station Wagon (8D5, B5)	11.94 - 09.01	S1-6-14-50-27-17	10	1	S90-1-05-006		S11	91105006	112/5	57	M14x1,5	T	25
	11.94 - 09.01	M14x1,5x27, KU r=13	16	1	S90-1-08-001		S11	91108001	112/5	57	M14x1,5	T	25
	11.94 - 09.01		30	2	S90-2-15-005		S13	91215005	112/5	57	M14x1,5	T	25
	11.94 - 09.01		40	2	S90-2-20-004		S13	91220004	112/5	57	M14x1,5	T	25
	11.94 - 09.01		50	7	S90-7-25-005			91725005	112/5	57	M14x1,5	T	25
A4 Avant (8E5, B6)													
A4 Station Wagon (8E5, B6)	04.01 - 12.04	S1-6-14-50-27-17	10	1	S90-1-05-016		S11	91105016	112/5	57	M14x1,5	T	19
	04.01 - 12.04	M14x1,5x27, KU r=13	16	1	S90-1-08-002		S11	91108002	112/5	57	M14x1,5	T	19
	04.01 - 12.04		24	2	S90-2-12-003		S3	91212003	112/5	57	M14x1,5	T	19
	04.01 - 12.04		30	2	S90-2-15-013			91215013	112/5	57	M14x1,5	T	19
	04.01 - 12.04		40	2	S90-2-20-003			91220003	112/5	57	M14x1,5	T	19
	04.01 - 12.04		40	7	S90-7-20-017			91720017	112/5	57	M14x1,5	T	19
	04.01 - 12.04		50	7	S90-7-25-005			91725005	112/5	57	M14x1,5	T	19
A4 Avant (8ED, B7)													
A4 Station W (8ED, B7)	11.04 - 06.08	S1-6-14-50-27-17	10	1	S90-1-05-016		S11	91105016	112/5	57	M14x1,5	T	19
	11.04 - 06.08	M14x1,5x27, KU r=13	16	1	S90-1-08-002		S11	91108002	112/5	57	M14x1,5	T	19
	11.04 - 06.08		20	2	S90-2-10-027		S3	91210027	112/5	57	M14x1,5	T	19
	11.04 - 06.08		24	2	S90-2-12-003		S3	91212003	112/5	57	M14x1,5	T	19
	11.04 - 06.08		30	2	S90-2-15-013			91215013	112/5	57	M14x1,5	T	19
	11.04 - 06.08		40	2	S90-2-20-003			91220003	112/5	57	M14x1,5	T	19
	11.04 - 06.08		40	7	S90-7-20-017			91720017	112/5	57	M14x1,5	T	19
	11.04 - 06.08		50	7	S90-7-25-005			91725005	112/5	57	M14x1,5	T	19
A4 Avant (8K5, B8)													
A4 Station Wagon (8K5, B8)	11.07 -	S1-6-14-50-27-17	24	2	S90-2-12-004	S90-2-12-004-B	S3	91212004	112/5	66,45	M14x1,5	T	9
	11.07 -	M14x1,5x27, KU r=13	30	2	S90-2-15-017	S90-2-15-017-B		91215017	112/5	66,45	M14x1,5	T	9
	11.07 -		40	2	S90-2-20-007	S90-2-20-007-B		91220007	112/5	66,45	M14x1,5	T	9
	11.07 -		40	7	S90-7-20-016	S90-7-20-016-B		91720016	112/5	66,45	M14x1,5	T	9
	11.07 -		50	7	S90-7-25-016			91725016	112/5	66,45	M14x1,5	T	9
	11.07 -		60	7	S90-7-30-007			91730007	112/5	66,45	M14x1,5	T	9
A4 Cabriolet (8H7, B6, 8HE, B7)													
A4 Convertible (8H7, B6, 8HE, B7)	04.02 - 03.09	S1-6-14-50-27-17	10	1	S90-1-05-016		S11	91105016	112/5	57	M14x1,5	T	27
	04.02 - 03.09	M14x1,5x27, KU r=13	16	1	S90-1-08-002		S11	91108002	112/5	57	M14x1,5	T	27
	04.02 - 03.09		30	2	S90-2-15-013			91215013	112/5	57	M14x1,5	T	27
	04.02 - 03.09		40	2	S90-2-20-003			91220003	112/5	57	M14x1,5	T	27
	04.02 - 03.09		50	7	S90-7-25-005			91725005	112/5	57	M14x1,5	T	27
A5 (8T3, B8)													
	06.07 -	S4-6-14-50-27-17	24	2	S90-2-12-004	S90-2-12-004-B		91212004	112/5	66,45	M14x1,5	T	-1
	06.07 -	M14x1,5x27, KU r=13	30	2	S90-2-15-017	S90-2-15-017-B		91215017	112/5	66,45	M14x1,5	T	-1
	06.07 -		40	2	S90-2-20-007	S90-2-20-007-B		91220007	112/5	66,45	M14x1,5	T	-1
	06.07 -		40	7	S90-7-20-016	S90-7-20-016-B		91720016	112/5	66,45	M14x1,5	T	-1
	06.07 -		50	7	S90-7-25-016			91725016	112/5	66,45	M14x1,5	T	-1
	06.07 -		60	7	S90-7-30-007			91730007	112/5	66,45	M14x1,5	T	-1
A5 Cabriolet (8F7 B8)													
A5 Convertible (8F7, B8)	03.09 -	S4-6-14-50-27-17	24	2	S90-2-12-004	S90-2-12-004-B		91212004	112/5	66,45	M14x1,5	T	-1
	03.09 -	M14x1,5x27, KU r=13	30	2	S90-2-15-017	S90-2-15-017-B		91215017	112/5	66,45	M14x1,5	T	-1
	03.09 -		40	2	S90-2-20-007	S90-2-20-007-B		91220007	112/5	66,45	M14x1,5	T	-1
	03.09 -		40	7	S90-7-20-016	S90-7-20-016-B		91720016	112/5	66,45	M14x1,5	T	-1
	03.09 -		50	7	S90-7-25-016			91725016	112/5	66,45	M14x1,5	T	-1
	03.09 -		60	7	S90-7-30-007			91730007	112/5	66,45	M14x1,5	T	-1
A5 Sportback (8TA,B8)													
	09.09 -	S4-6-14-50-27-17	24	2	S90-2-12-004	S90-2-12-004-B		91212004	112/5	66,45	M14x1,5	T	-1
	09.09 -	M14x1,5x27, KU r=13	30	2	S90-2-15-017	S90-2-15-017-B		91215017	112/5	66,45	M14x1,5	T	-1
	09.09 -		40	2	S90-2-20-007	S90-2-20-007-B		91220007	112/5	66,45	M14x1,5	T	-1
	09.09 -		40	7	S90-7-20-016	S90-7-20-016-B		91720016	112/5	66,45	M14x1,5	T	-1
	09.09 -		50	7	S90-7-25-016			91725016	112/5	66,45	M14x1,5	T	-1
	09.09 -		60	7	S90-7-30-007			91730007	112/5	66,45	M14x1,5	T	-1
A6 (4A, C4)													
	06.94 - 10.97	S1-6-14-50-27-17	10	1	S90-1-05-006		S11	91105006	112/5	57	M14x1,5	T	20
	06.94 - 10.97	M14x1,5x27, KU r=13	16	1	S90-1-08-001		S11	91108001	112/5	57	M14x1,5	T	20
	06.94 - 10.97		30	2	S90-2-15-005			91215005	112/5	57	M14x1,5	T	20
	06.94 - 10.97		40	2	S90-2-20-004			91220004	112/5	57	M14x1,5	T	20
	06.94 - 10.97		50	7	S90-7-25-005			91725005	112/5	57	M14x1,5	T	20

Modell | *Model*	Baujahr | *Year*	Original-radschraube (nicht bestellbar) | *Original Bolt (not available)*	Spurweiten-änd. Achse | *Total track widening* (mm)	Eibach System	Artikel-Nr. silber | *Part-No. silver*	Artikel-Nr. schwarz | *Part-No. black*	Hinweise | *Notes*	Kennzeichnung | *Stamping*	Lochkreis | - Anzahl | *Bolt pattern* | *No. of holes*	Zentrierung | *Centre bore* (mm)	Gewinde | *Thread*	Gutachten | *Homologation*	ET-Grenze | *Offset frontier*
AUDI													
A6 (4B, C5)													
	01.97 - 01.05	S1-6-14-50-27-17	10	1	S90-1-05-016		S11	91105016	112/5	57	M14x1,5	T	10
	01.97 - 01.05	M14x1,5x27, KU r=13	16	1	S90-1-08-002		S11	91108002	112/5	57	M14x1,5	T	10
	01.97 - 01.05		30	2	S90-2-15-013		S13	91215013	112/5	57	M14x1,5	T	10
	01.97 - 01.05		40	2	S90-2-20-003		S13	91220003	112/5	57	M14x1,5	T	10
	01.97 - 01.05		40	7	S90-7-20-017			91720017	112/5	57	M14x1,5	T	10
	01.97 - 01.05		50	7	S90-7-25-005			91725005	112/5	57	M14x1,5	T	10
A6 (4F2, C6)													
	05.04 - 03.11	S1-6-14-50-27-17	24	2	S90-2-12-003			91212003	112/5	57	M14x1,5	T	18
	05.04 - 03.11	M14x1,5x27, KU r=13	30	2	S90-2-15-013			91215013	112/5	57	M14x1,5	T	18
	05.04 - 03.11		40	2	S90-2-20-003			91220003	112/5	57	M14x1,5	T	18
	05.04 - 03.11		40	7	S90-7-20-017			91720017	112/5	57	M14x1,5	T	18
	05.04 - 03.11		50	7	S90-7-25-005			91725005	112/5	57	M14x1,5	T	18
	05.04 - 03.11		60	7	S90-7-30-012			91730012	112/5	57	M14x1,5	T	18
A6 (4G2, C7)													
	11.10 -	S1-6-14-50-27-17	24	2	S90-2-12-004	S90-2-12-004-B		91212004	112/5	66,45	M14x1,5	T	13
	11.10 -	M14x1,5x27, KU r=13	30	2	S90-2-15-017	S90-2-15-017-B		91215017	112/5	66,45	M14x1,5	T	13
	11.10 -		40	2	S90-2-20-007	S90-2-20-007-B		91220007	112/5	66,45	M14x1,5	T	13
	11.10 -		40	7	S90-7-20-016	S90-7-20-016-B		91720016	112/5	66,45	M14x1,5	T	13
	11.10 -		50	7	S90-7-25-016			91725016	112/5	66,45	M14x1,5	T	13
	11.10 -		60	7	S90-7-30-007			91730007	112/5	66,45	M14x1,5	T	13
A6 ALLROAD (4BH, C5)													
	05.00 - 08.05	S1-6-14-50-27-17	10	1	S90-1-05-016		S11	91105016	112/5	57	M14x1,5	T	1
	05.00 - 08.05	M14x1,5x27, KU r=13	16	1	S90-1-08-002		S11	91108002	112/5	57	M14x1,5	T	1
	05.00 - 08.05		30	2	S90-2-15-013		S13	91215013	112/5	57	M14x1,5	T	1
	05.00 - 08.05		40	2	S90-2-20-003		S13	91220003	112/5	57	M14x1,5	T	1
	05.00 - 08.05		40	7	S90-7-20-017			91720017	112/5	57	M14x1,5	T	1
	05.00 - 08.05		50	7	S90-7-25-005			91725005	112/5	57	M14x1,5	T	1
A6 Allroad (4FH, C6)													
	05.06 - 08.11	S1-6-14-50-27-17	24	2	S90-2-12-003			91212003	112/5	57	M14x1,5	T	18
	05.06 - 08.11	M14x1,5x27, KU r=13	30	2	S90-2-15-013			91215013	112/5	57	M14x1,5	T	18
	05.06 - 08.11		40	2	S90-2-20-003			91220003	112/5	57	M14x1,5	T	18
	05.06 - 08.11		40	7	S90-7-20-017			91720017	112/5	57	M14x1,5	T	18
	05.06 - 08.11		50	7	S90-7-25-005			91725005	112/5	57	M14x1,5	T	18
	05.06 - 08.11		60	7	S90-7-30-012			91730012	112/5	57	M14x1,5	T	18
A6 Avant (4A, C4)													
A6 Station Wagon (4A, C4)	06.94 - 12.97	S1-6-14-50-27-17	10	1	S90-1-05-006		S11	91105006	112/5	57	M14x1,5	T	20
	06.94 - 12.97	M14x1,5x27, KU r=13	16	1	S90-1-08-001		S11	91108001	112/5	57	M14x1,5	T	20
	06.94 - 12.97		30	2	S90-2-15-005			91215005	112/5	57	M14x1,5	T	20
	06.94 - 12.97		40	2	S90-2-20-004			91220004	112/5	57	M14x1,5	T	20
	06.94 - 12.97		50	7	S90-7-25-005			91725005	112/5	57	M14x1,5	T	20
A6 Avant (4B, C5)													
A6 Station Wagon (4B, C5)	11.97 - 01.05	S1-6-14-50-27-17	10	1	S90-1-05-016		S11	91105016	112/5	57	M14x1,5	T	10
	11.97 - 01.05	M14x1,5x27, KU r=13	16	1	S90-1-08-002		S11	91108002	112/5	57	M14x1,5	T	10
	11.97 - 01.05		30	2	S90-2-15-013		S13	91215013	112/5	57	M14x1,5	T	10
	11.97 - 01.05		40	2	S90-2-20-003		S13	91220003	112/5	57	M14x1,5	T	10
	11.97 - 01.05		40	7	S90-7-20-017			91720017	112/5	57	M14x1,5	T	10
	11.97 - 01.05		50	7	S90-7-25-005			91725005	112/5	57	M14x1,5	T	10
A6 Avant (4F5, C6)													
A6 Station Wagon (4F5, C6)	03.05 - 08.11	S1-6-14-50-27-17	24	2	S90-2-12-003			91212003	112/5	57	M14x1,5	T	18
	03.05 - 08.11	M14x1,5x27, KU r=13	30	2	S90-2-15-013			91215013	112/5	57	M14x1,5	T	18
	03.05 - 08.11		40	2	S90-2-20-003			91220003	112/5	57	M14x1,5	T	18
	03.05 - 08.11		40	7	S90-7-20-017			91720017	112/5	57	M14x1,5	T	18
	03.05 - 08.11		50	7	S90-7-25-005			91725005	112/5	57	M14x1,5	T	18
	03.05 - 08.11		60	7	S90-7-30-012			91730012	112/5	57	M14x1,5	T	18
A6 Avant (4G5, C7, 4GD)													
A6 Station Wagon (4G5, C7, 4GD)	05.11 -	S1-6-14-50-27-17	24	2	S90-2-12-004	S90-2-12-004-B		91212004	112/5	66,45	M14x1,5	T	13
	05.11 -	M14x1,5x27, KU r=13	30	2	S90-2-15-017	S90-2-15-017-B		91215017	112/5	66,45	M14x1,5	T	13
	05.11 -		40	2	S90-2-20-007	S90-2-20-007-B		91220007	112/5	66,45	M14x1,5	T	13
	05.11 -		40	7	S90-7-20-016	S90-7-20-016-B		91720016	112/5	66,45	M14x1,5	T	13
	05.11 -		50	7	S90-7-25-016			91725016	112/5	66,45	M14x1,5	T	13
	05.11 -		60	7	S90-7-30-007			91730007	112/5	66,45	M14x1,5	T	13
A7 Sportback (4GA, 4GF)													
	10.10 -	S1-6-14-50-27-17	24	2	S90-2-12-004	S90-2-12-004-B		91212004	112/5	66,45	M14x1,5	T	2
	10.10 -	M14x1,5x27, KU r=13	30	2	S90-2-15-017	S90-2-15-017-B		91215017	112/5	66,45	M14x1,5	T	2
	10.10 -		40	2	S90-2-20-007	S90-2-20-007-B		91220007	112/5	66,45	M14x1,5	T	2
	10.10 -		40	7	S90-7-20-016	S90-7-20-016-B		91720016	112/5	66,45	M14x1,5	T	2
	10.10 -		50	7	S90-7-25-016			91725016	112/5	66,45	M14x1,5	T	2
	10.10 -		60	7	S90-7-30-007			91730007	112/5	66,45	M14x1,5	T	2
A8 (4D2, 4D8)													
	03.94 - 12.02	S1-6-14-50-27-17	10	1	S90-1-05-016		S11	91105016	112/5	57	M14x1,5	T	27
	03.94 - 12.02	M14x1,5x27, KU r=13	16	1	S90-1-08-002		S11	91108002	112/5	57	M14x1,5	T	27
	03.94 - 12.02		30	2	S90-2-15-013			91215013	112/5	57	M14x1,5	T	27
	03.94 - 12.02		40	2	S90-2-20-003			91220003	112/5	57	M14x1,5	T	27
	03.94 - 12.02		50	7	S90-7-25-005			91725005	112/5	57	M14x1,5	T	27
A8 (4E_)													
	10.02 - 07.10	S4-6-14-50-27-17	10	1	S90-1-05-016		S11	91105016	112/5	57	M14x1,5	T	25
	10.02 - 07.10	M14x1,5x27, KU r=13	16	1	S90-1-08-002		S11	91108002	112/5	57	M14x1,5	T	25
	10.02 - 07.10		30	2	S90-2-15-013			91215013	112/5	57	M14x1,5	T	25
	10.02 - 07.10		40	2	S90-2-20-003			91220003	112/5	57	M14x1,5	T	25
	10.02 - 07.10		50	7	S90-7-25-005			91725005	112/5	57	M14x1,5	T	25
A8 (4H_)													
	11.09 -	S1-6-14-50-27-17	24	2	S90-2-12-004	S90-2-12-004-B		91212004	112/5	66,45	M14x1,5	T	3
	11.09 -	M14x1,5x27, KU r=13	30	2	S90-2-15-017	S90-2-15-017-B		91215017	112/5	66,45	M14x1,5	T	3
	11.09 -		40	2	S90-2-20-007	S90-2-20-007-B		91220007	112/5	66,45	M14x1,5	T	3
	11.09 -		40	7	S90-7-20-016	S90-7-20-016-B		91720016	112/5	66,45	M14x1,5	T	3
	11.09 -		50	7	S90-7-25-016			91725016	112/5	66,45	M14x1,5	T	3
	11.09 -		60	7	S90-7-30-007			91730007	112/5	66,45	M14x1,5	T	3
Q3 (8U)													
	06.11 -	S4-7-14-50-30-17	20	2	S90-2-10-027			91210027	112/5	57	M14x1,5	T	3
	06.11 -	M14x1,5x30, KU r=14	24	2	S90-2-12-003			91212003	112/5	57	M14x1,5	T	3
	06.11 -		30	2	S90-2-15-013			91215013	112/5	57	M14x1,5	T	3
	06.11 -		40	2	S90-2-20-003			91220003	112/5	57	M14x1,5	T	3
	06.11 -		40	7	S90-7-20-015		S46	91720017	112/5	57	M14x1,5	T	3
	06.11 -		50	7	S90-7-25-005			91725005	112/5	57	M14x1,5	T	3
	06.11 -		60	7	S90-7-30-012			91730012	112/5	57	M14x1,5	T	3

Modell | *Model*	Baujahr | *Year*	Original-radschraube (nicht bestellbar) | *Original Bolt (not available)*	Spurweiten-änd. Achse | *Total track widening* (mm)	Eibach System	Artikel-Nr. silber | *Part-No. silver*	Artikel-Nr. schwarz | *Part-No. black*	Hinweise | *Notes*	Kennzeichnung | *Stamping*	Lochkreis | - Anzahl | *Bolt pattern* | *No. of holes*	Zentrierung | *Centre bore* (mm)	Gewinde | *Thread*	Gutachten | *Homologation*	ET-Grenze | *Offset frontier*
AUDI													
Q5 (8R)													
	11.08 -	S4-7-14-50-30-17	24	2	S90-2-12-004	S90-2-12-004-B		91212004	112/5	66,45	M14x1,5	T	7
	11.08 -	M14x1,5x30, KU r=14	30	2	S90-2-15-017	S90-2-15-017-B		91215017	112/5	66,45	M14x1,5	T	7
	11.08 -		40	2	S90-2-20-007	S90-2-20-007-B		91220007	112/5	66,45	M14x1,5	T	7
	11.08 -		50	7	S90-7-25-016			91725016	112/5	66,45	M14x1,5	T	7
	11.08 -		60	7	S90-7-30-007			91730007	112/5	66,45	M14x1,5	T	7
Q7 (4L)													
	03.06 -	S4-7-14-50-36-19	14	2	S90-2-07-001		S40	91207001	130/5	71,5	M14x1,5	T	29
	03.06 -	M14x1,5x36, KU r=14	30	2	S90-2-15-018			91215018	130/5	71,5	M14x1,5	T	29
	03.06 -		36	2	S90-2-18-001			91218001	130/5	71,5	M14x1,5	T	29
	03.06 -		36	7	S90-7-18-002		S46	91718001	130/5	71,5	M14x1,5	T	29
	03.06 -		42	7	S90-7-21-007		S46	91721001	130/5	71,5	M14x1,5	T	29
	03.06 -		46	2	S90-2-23-001			91223001	130/5	71,5	M14x1,5	T	29
	03.06 -		46	7	S90-7-23-002		S46	91723001	130/5	71,5	M14x1,5	T	29
TT (8N3)													
	10.98 - 06.06	S1-6-14-50-27-17	10	1	S90-1-05-006		S11	91105006	100/5	57	M14x1,5	T	16
	10.98 - 06.06	M14x1,5x27, KU r=13	16	1	S90-1-08-001		S11	91108001	100/5	57	M14x1,5	T	16
	10.98 - 06.06		30	2	S90-2-15-005			91215005	100/5	57	M14x1,5	T	16
	10.98 - 06.06		40	2	S90-2-20-004			91220004	100/5	57	M14x1,5	T	16
	10.98 - 06.06		50	7	S90-7-25-003			91725003	100/5	57	M14x1,5	T	16
TT (8J3)													
	08.06 - 06.14	S1-6-14-50-27-17	20	2	S90-2-10-027		S3	91210027	112/5	57	M14x1,5	T	17
	08.06 - 06.14	M14x1,5x27, KU r=13	24	2	S90-2-12-003		S63	91212003	112/5	57	M14x1,5	T	17
	08.06 - 06.14		30	2	S90-2-15-013			91215013	112/5	57	M14x1,5	T	17
	08.06 - 06.14		40	2	S90-2-20-003			91220003	112/5	57	M14x1,5	T	17
	08.06 - 06.14		40	7	S90-7-20-017			91720017	112/5	57	M14x1,5	T	17
	08.06 - 06.14		50	7	S90-7-25-005			91725005	112/5	57	M14x1,5	T	17
	08.06 - 06.14		60	7	S90-7-30-012			91730012	112/5	57	M14x1,5	T	17
TT (FV3)													
	07.14 -	S1-6-14-50-27-17	20	2	S90-2-10-027			91210027	112/5	57	M14x1,5	T	17
	07.14 -	M14x1,5x27, KU r=13	24	2	S90-2-12-003			91212003	112/5	57	M14x1,5	T	17
	07.14 -		30	2	S90-2-15-013			91215013	112/5	57	M14x1,5	T	17
	07.14 -		40	2	S90-2-20-003			91220003	112/5	57	M14x1,5	T	17
	07.14 -		40	7	S90-7-20-017			91720017	112/5	57	M14x1,5	T	17
	07.14 -		50	7	S90-7-25-005			91725005	112/5	57	M14x1,5	T	17
	07.14 -		60	7	S90-7-30-012			91730012	112/5	57	M14x1,5	T	17
TT Roadster (8N9)													
	10.99 - 06.06	S1-6-14-50-27-17	10	1	S90-1-05-006		S11	91105006	100/5	57	M14x1,5	T	16
	10.99 - 06.06	M14x1,5x27, KU r=13	16	1	S90-1-08-001		S11	91108001	100/5	57	M14x1,5	T	16
	10.99 - 06.06		30	2	S90-2-15-005			91215005	100/5	57	M14x1,5	T	16
	10.99 - 06.06		40	2	S90-2-20-004			91220004	100/5	57	M14x1,5	T	16
	10.99 - 06.06		50	7	S90-7-25-003			91725003	100/5	57	M14x1,5	T	16
TT Roadster (8J9)													
	03.07 - 06.14	S1-6-14-50-27-17	20	2	S90-2-10-027		S3	91210027	112/5	57	M14x1,5	T	17
	03.07 - 06.14	M14x1,5x27, KU r=13	24	2	S90-2-12-003		S63	91212003	112/5	57	M14x1,5	T	17
	03.07 - 06.14		30	2	S90-2-15-013			91215013	112/5	57	M14x1,5	T	17
	03.07 - 06.14		40	2	S90-2-20-003			91220003	112/5	57	M14x1,5	T	17
	03.07 - 06.14		40	7	S90-7-20-017			91720017	112/5	57	M14x1,5	T	17
	03.07 - 06.14		50	7	S90-7-25-005			91725005	112/5	57	M14x1,5	T	17
	03.07 - 06.14		60	7	S90-7-30-012			91730012	112/5	57	M14x1,5	T	17
TT Roadster (FV9)													
	11.14 -	S1-6-14-50-27-17	20	2	S90-2-10-027			91210027	112/5	57	M14x1,5	T	17
	11.14 -	M14x1,5x27, KU r=13	24	2	S90-2-12-003			91212003	112/5	57	M14x1,5	T	17
	11.14 -		30	2	S90-2-15-013			91215013	112/5	57	M14x1,5	T	17
	11.14 -		40	2	S90-2-20-003			91220003	112/5	57	M14x1,5	T	17
	11.14 -		40	7	S90-7-20-017			91720017	112/5	57	M14x1,5	T	17
	11.14 -		50	7	S90-7-25-005			91725005	112/5	57	M14x1,5	T	17
	11.14 -		60	7	S90-7-30-012			91730012	112/5	57	M14x1,5	T	17
BMW													
1 (E87)													
	11.03 - 01.13	S1-1-12-50-25-17	10	1	S90-1-05-017	S90-1-05-017-B	S11	91105017	120/5	72,5	M12x1,5	T	14
	11.03 - 01.13	M12x1,5x25, KG60°	20	2	S90-2-10-004	S90-2-10-004-B	S3	91210004	120/5	72,5	M12x1,5	T	14
	11.03 - 01.13		24	2	S90-2-12-002	S90-2-12-002-B		91212002	120/5	72,5	M12x1,5	T	14
	11.03 - 01.13		30	2	S90-2-15-001	S90-2-15-001-B		91215001	120/5	72,5	M12x1,5	T	14
	11.03 - 01.13		40	2	S90-2-20-020	S90-2-20-020-B		91220020	120/5	72,5	M12x1,5	T	14
	11.03 - 01.13		50	7	S90-7-25-011	S90-7-25-011-B		91725011	120/5	72,5	M12x1,5	T	14
	11.03 - 01.13		60	7	S90-7-30-002	S90-7-30-002-B		91730002	120/5	72,5	M12x1,5	T	14
1 (E81)													
	09.06 - 09.12	S1-1-12-50-25-17	10	1	S90-1-05-017	S90-1-05-017-B	S11	91105017	120/5	72,5	M12x1,5	T	14
	09.06 - 09.12	M12x1,5x25, KG60°	20	2	S90-2-10-004	S90-2-10-004-B	S3	91210004	120/5	72,5	M12x1,5	T	14
	09.06 - 09.12		24	2	S90-2-12-002	S90-2-12-002-B		91212002	120/5	72,5	M12x1,5	T	14
	09.06 - 09.12		30	2	S90-2-15-001	S90-2-12-001-B		91215001	120/5	72,5	M12x1,5	T	14
	09.06 - 09.12		40	2	S90-2-20-020	S90-2-20-020-B		91220020	120/5	72,5	M12x1,5	T	14
	09.06 - 09.12		50	7	S90-7-25-011	S90-7-25-011-B		91725011	120/5	72,5	M12x1,5	T	14
	09.06 - 09.12		60	7	S90-7-30-002	S90-7-30-002-B		91730002	120/5	72,5	M12x1,5	T	14
1 (F20)													
	11.10 -	S1-1-14-25-27-17	10	1	S90-1-05-017	S90-1-05-017-B	S11	91105017	120/5	72,5	M14x1,25	T	10
	11.10 -	M14x1,25x27, KG60°	20	2	S90-2-10-004	S90-2-10-004-B	S3	91210004	120/5	72,5	M14x1,25	T	10
	11.10 -		24	2	S90-2-12-002	S90-2-12-002-B		91212002	120/5	72,5	M14x1,25	T	10
	11.10 -		30	2	S90-2-15-001	S90-2-15-001-B		91215001	120/5	72,5	M14x1,25	T	10
	11.10 -		40	2	S90-2-20-020	S90-2-20-020-B		91220020	120/5	72,5	M14x1,25	T	10
	11.10 -		40	7	S90-7-20-036	S90-7-20-036-B	S46	91720036	120/5	72,5	M14x1,25	T	10
	11.10 -		50	7	S90-7-25-038	S90-7-25-038-B		91725038	120/5	72,5	M14x1,25	T	10
	11.10 -		60	7	S90-7-30-032	S90-7-30-032-B		91730032	120/5	72,5	M14x1,25	T	10
1 (F21)													
	12.11 -	S1-1-14-25-27-17	10	1	S90-1-05-017	S90-1-05-017-B	S11	91105017	120/5	72,5	M14x1,25	T	10
	12.11 -	M14x1,25x27, KG60°	20	2	S90-2-10-004	S90-2-10-004-B	S3	91210004	120/5	72,5	M14x1,25	T	10
	12.11 -		24	2	S90-2-12-002	S90-2-12-002-B		91212002	120/5	72,5	M14x1,25	T	10
	12.11 -		30	2	S90-2-15-001	S90-2-15-001-B		91215001	120/5	72,5	M14x1,25	T	10
	12.11 -		40	2	S90-2-20-020	S90-2-20-020-B		91220020	120/5	72,5	M14x1,25	T	10
	12.11 -		40	7	S90-7-20-036	S90-7-20-036-B	S46	91720036	120/5	72,5	M14x1,25	T	10
	12.11 -		50	7	S90-7-25-038	S90-7-25-038-B		91725038	120/5	72,5	M14x1,25	T	10
	12.11 -		60	7	S90-7-30-032	S90-7-30-032-B		91730032	120/5	72,5	M14x1,25	T	10

Modell | *Model*	Baujahr | *Year*	Original-radschraube (nicht bestellbar) | *Original Bolt (not available)*	Spurweiten-änd. Achse | *Total track widening* (mm)	Eibach System	Artikel-Nr. silber | *Part-No. silver*	Artikel-Nr. schwarz | *Part-No. black*	Hinweise | *Notes*	Kennzeichnung | *Stamping*	Lochkreis | - Anzahl | *Bolt pattern* | *No. of holes*	Zentrierung | *Centre bore* (mm)	Gewinde | *Thread*	Gutachten | *Homologation*	ET-Grenze | *Offset frontier*
BMW													
1 Cabriolet (E88)													
1 Convertible (E88)	03.08 -	S1-1-12-50-25-17	10	1	S90-1-05-017	S90-1-05-017-B	S11	91105017	120/5	72,5	M12x1,5	T	14
	03.08 -	M12x1,5x25, KG60°	20	2	S90-2-10-004	S90-2-10-004-B	S3	91210004	120/5	72,5	M12x1,5	T	14
	03.08 -		24	2	S90-2-12-002	S90-2-12-002-B		91212002	120/5	72,5	M12x1,5	T	14
	03.08 -		30	2	S90-2-15-001	S90-2-15-001-B		91215001	120/5	72,5	M12x1,5	T	14
	03.08 -		40	2	S90-2-20-020	S90-2-20-020-B		91220020	120/5	72,5	M12x1,5	T	14
	03.08 -		50	7	S90-7-25-011	S90-7-25-011-B		91725011	120/5	72,5	M12x1,5	T	14
	03.08 -		60	7	S90-7-30-002	S90-7-30-002-B		91730002	120/5	72,5	M12x1,5	T	14
1 Coupe (E82)													
	10.07 -	S1-1-12-50-25-17	10	1	S90-1-05-017	S90-1-05-017-B	S11	91105017	120/5	72,5	M12x1,5	T	14
	10.07 -	M12x1,5x25, KG60°	20	2	S90-2-10-004	S90-2-10-004-B	S3	91210004	120/5	72,5	M12x1,5	T	14
	10.07 -		24	2	S90-2-12-002	S90-2-12-002-B		91212002	120/5	72,5	M12x1,5	T	14
	10.07 -		30	2	S90-2-15-001	S90-2-15-001-B		91215001	120/5	72,5	M12x1,5	T	14
	10.07 -		40	2	S90-2-20-020	S90-2-20-020-B		91220020	120/5	72,5	M12x1,5	T	14
	10.07 -		50	7	S90-7-25-011	S90-7-25-011-B		91725011	120/5	72,5	M12x1,5	T	14
	10.07 -		60	7	S90-7-30-002	S90-7-30-002-B		91730002	120/5	72,5	M12x1,5	T	14
2 Coupe (F22)													
	10.13 -	S1-1-14-25-27-17	20	2	S90-2-10-004	S90-2-10-004-B	S3	91210004	120/5	72,5	M14x1,5	T	10
	10.13 -	M14x1,25x27, KG60°	24	2	S90-2-12-002	S90-2-12-002-B		91212002	120/5	72,5	M14x1,5	T	10
	10.13 -		30	2	S90-2-15-001	S90-2-15-001-B		91215001	120/5	72,5	M14x1,5	T	10
	10.13 -		40	2	S90-2-20-020	S90-2-20-020-B		91220020	120/5	72,5	M14x1,5	T	10
	10.13 -		40	7	S90-7-20-036	S90-7-20-036-B	S46	91720036	120/5	72,5	M14x1,5	T	10
	10.13 -		50	7	S90-7-25-038	S90-7-25-038-B		91725038	120/5	72,5	M14x1,5	T	10
	10.13 -		60	7	S90-7-30-032	S90-7-30-032-B		91730032	120/5	72,5	M14x1,5	T	10
2 Cabriolet (F23)													
2 Convertible (F23)	11.14 -	S1-1-14-25-27-17	20	2	S90-2-10-004	S90-2-10-004-B	S3	91210004	120/5	72,5	M14x1,5	T	10
	11.14 -	M14x1,25x27, KG60°	24	2	S90-2-12-002	S90-2-12-002-B		91212002	120/5	72,5	M14x1,5	T	10
	11.14 -		30	2	S90-2-15-001	S90-2-15-001-B		91215001	120/5	72,5	M14x1,5	T	10
	11.14 -		40	2	S90-2-20-020	S90-2-20-020-B		91220020	120/5	72,5	M14x1,5	T	10
	11.14 -		40	7	S90-7-20-036	S90-7-20-036-B	S46	91720036	120/5	72,5	M14x1,5	T	10
	11.14 -		50	7	S90-7-25-038	S90-7-25-038-B		91725038	120/5	72,5	M14x1,5	T	10
	11.14 -		60	7	S90-7-30-032	S90-7-30-032-B		91730032	120/5	72,5	M14x1,5	T	10
2 Active Tourer (F45)													
	09.14 -	S1-1-14-25-27-17	20	2	S90-2-10-038			91210038	112/5	66,5	M14x1,5	T	32
	09.14 -	M14x1,25x27, KG60°	24	2	S90-2-12-023			91212023	112/5	66,5	M14x1,5	T	32
	09.14 -		30	2	S90-2-15-055			91215055	112/5	66,5	M14x1,5	T	32
	09.14 -		40	2	S90-2-20-036			91220036	112/5	66,5	M14x1,5	T	32
	09.14 -		40	7	S90-7-20-044			91720044	112/5	66,5	M14x1,5	T	32
	09.14 -		50	7	S90-7-25-052			91725052	112/5	66,5	M14x1,5	T	32
	09.14 -		60	7	S90-7-30-059			91730059	112/5	66,5	M14x1,5	T	32
3 (E30)													
	09.82 - 03.92	S1-1-12-50-25-17	10	1	S90-1-05-010	S90-1-05-010-B	S11	91105010	100/4	57	M12x1,5	T	15
	09.82 - 03.92	M12x1,5x25, KG60°	16	1	S90-1-08-003	S90-1-08-003-B	S11	91108003	100/4	57	M12x1,5	T	15
	09.82 - 03.92		30	2	S90-2-15-004	S90-2-15-004-B	S13	91215004	100/4	57	M12x1,5	T	15
	09.82 - 03.92		40	2	S90-2-20-011	S90-2-20-011-B		91220011	100/4	57	M12x1,5	§21	15
	09.82 - 03.92		50	7	S90-7-25-001			91725001	100/4	57	M12x1,5	§21	15
M3 (E30)													
	07.86 - 01.92	S1-1-12-50-25-17	10	1	S90-1-05-017	S90-1-05-017-B	S11	91105017	120/5	72,5	M12x1,5	§21	15
	07.86 - 01.92	M12x1,5x25, KG60°	30	2	S90-2-15-001	S90-2-15-001-B		91215001	120/5	72,5	M12x1,5	§21	15
	07.86 - 01.92		40	7	S90-7-20-010	S90-7-20-010-B	S67	91720010	120/5	72,5	M12x1,5	§21	15
	07.86 - 01.92		50	7	S90-7-25-011	S90-7-25-011-B		91725011	120/5	72,5	M12x1,5	§21	15
	07.86 - 01.92		60	7	S90-7-30-002	S90-7-30-002-B		91730002	120/5	72,5	M12x1,5	§21	15
3 (E36)													
	09.90 - 02.98	S1-1-12-50-25-17	10	1	S90-1-05-017	S90-1-05-017-B	S11	91105017	120/5	72,5	M12x1,5	T	15
	09.90 - 02.98	M12x1,5x25, KG60°	20	2	S90-2-10-004	S90-2-10-004-B	S10	91210004	120/5	72,5	M12x1,5	T	15
	09.90 - 02.98		30	2	S90-2-15-001	S90-2-15-001-B		91215001	120/5	72,5	M12x1,5	T	15
	09.90 - 02.98		40	7	S90-7-20-010	S90-7-20-010-B	S67	91720010	120/5	72,5	M12x1,5	T	15
	09.90 - 02.98		50	7	S90-7-25-011	S90-7-25-011-B		91725011	120/5	72,5	M12x1,5	T	15
	09.90 - 02.98		60	7	S90-7-30-002	S90-7-30-002-B		91730002	120/5	72,5	M12x1,5	T	15
3 (E46)													
	02.98 - 04.05	S1-1-12-50-25-17	10	1	S90-1-05-017	S90-1-05-017-B		91105017	120/5	72,5	M12x1,5	T	15
	02.98 - 04.05	M12x1,5x25, KG60°	20	2	S90-2-10-004	S90-2-10-004-B		91210004	120/5	72,5	M12x1,5	T	15
	02.98 - 04.05		24	2	S90-2-12-002	S90-2-12-002-B		91212002	120/5	72,5	M12x1,5	T	15
	02.98 - 04.05		30	2	S90-2-15-001	S90-2-15-001-B		91215001	120/5	72,5	M12x1,5	T	15
	02.98 - 04.05		40	2	S90-2-20-020	S90-2-20-020-B		91220020	120/5	72,5	M12x1,5	T	15
	02.98 - 04.05		40	7	S90-7-20-010	S90-7-20-010-B	S67	91720010	120/5	72,5	M12x1,5	T	15
	02.98 - 04.05		50	7	S90-7-25-011	S90-7-25-011-B		91725011	120/5	72,5	M12x1,5	T	15
	02.98 - 04.05		60	7	S90-7-30-002	S90-7-30-002-B		91730002	120/5	72,5	M12x1,5	T	15
3 (E90)													
	01.05 - 12.11	S1-1-12-50-25-17	10	1	S90-1-05-017	S90-1-05-017-B	S6, S11	91105017	120/5	72,5	M12x1,5	T	4
	01.05 - 12.11	M12x1,5x25, KG60°	20	2	S90-2-10-004	S90-2-10-004-B	S10	91210004	120/5	72,5	M12x1,5	T	4
	01.05 - 12.11		24	2	S90-2-12-002	S90-2-12-002-B		91212002	120/5	72,5	M12x1,5	T	4
	01.05 - 12.11		30	2	S90-2-15-001	S90-2-15-001-B		91215001	120/5	72,5	M12x1,5	T	4
	01.05 - 12.11		40	2	S90-2-20-020	S90-2-20-020-B	S70	91220020	120/5	72,5	M12x1,5	T	4
	01.05 - 12.11		40	7	S90-7-20-010	S90-7-20-010-B	S67, S70	91720010	120/5	72,5	M12x1,5	T	4
	01.05 - 12.11		50	7	S90-7-25-011	S90-7-25-011-B	S70	91725011	120/5	72,5	M12x1,5	T	4
	01.05 - 12.11		60	7	S90-7-30-002	S90-7-30-002-B	S70	91730002	120/5	72,5	M12x1,5	T	4
3 (F30, F35, F80)													
	10.11 -	S1-1-14-25-27-17	20	2	S90-2-10-004	S90-2-10-004-B	S3	91210004	120/5	72,5	M14x1,25	T	1
	10.11 -	M14x1,25x27, KG60°	24	2	S90-2-12-002	S90-2-12-002-B		91212002	120/5	72,5	M14x1,25	T	1
	10.11 -		30	2	S90-2-15-001	S90-2-15-001-B		91215001	120/5	72,5	M14x1,25	T	1
	10.11 -		40	2	S90-2-20-020	S90-2-20-020-B		91220020	120/5	72,5	M14x1,25	T	1
	10.11 -		40	7	S90-7-20-036	S90-7-20-036-B	S46	91720036	120/5	72,5	M14x1,25	T	1
	10.11 -		50	7	S90-7-25-038	S90-7-25-038-B		91725038	120/5	72,5	M14x1,25	T	1
	10.11 -		60	7	S90-7-30-032	S90-7-30-032-B		91730032	120/5	72,5	M14x1,25	T	1
3 Cabriolet (E30)													
3 Convertible (E30)	12.85 - 10.93	S1-1-12-50-25-17	10	1	S90-1-05-010	S90-1-05-010-B	S11	91105010	100/4	57	M12x1,5	T	15
	12.85 - 10.93	M12x1,5x25, KG60°	16	1	S90-1-08-003	S90-1-08-003-B	S11	91108003	100/4	57	M12x1,5	T	15
	12.85 - 10.93		30	2	S90-2-15-004	S90-2-15-004-B	S13	91215004	100/4	57	M12x1,5	T	15
	12.85 - 10.93		40	2	S90-2-20-011	S90-2-20-011-B		91220011	100/4	57	M12x1,5	§21	15
	12.85 - 10.93		50	7	S90-7-25-001			91725001	100/4	57	M12x1,5	§21	15
3 Cabriolet (E30)													
3 Convertible (E30)	12.85 - 10.93	S1-1-12-50-25-17	10	1	S90-1-05-017	S90-1-05-017-B	S11	91105017	120/5	72,5	M12x1,5	T	15
	12.85 - 10.93	M12x1,5x25, KG60°	20	2	S90-2-10-004	S90-2-10-004-B	S10	91210004	120/5	72,5	M12x1,5	T	15
	12.85 - 10.93		30	2	S90-2-15-001	S90-2-15-001-B		91215001	120/5	72,5	M12x1,5	T	15
	12.85 - 10.93		40	7	S90-7-20-010	S90-7-20-010-B	S67	91720010	120/5	72,5	M12x1,5	T	15
	12.85 - 10.93		50	7	S90-7-25-011	S90-7-25-011-B		91725011	120/5	72,5	M12x1,5	T	15
	12.85 - 10.93		60	7	S90-7-30-002	S90-7-30-002-B		91730002	120/5	72,5	M12x1,5	T	15

Modell | *Model*	Baujahr | *Year*	Original-radschraube (nicht bestellbar) | *Original Bolt (not available)*	Spurweiten-änd. Achse | *Total track widening* (mm)	Eibach System	Artikel-Nr. silber | *Part-No. silver*	Artikel-Nr. schwarz | *Part-No. black*	Hinweise | *Notes*	Kennzeichnung | *Stamping*	Lochkreis | - Anzahl | *Bolt pattern* | *No. of holes*	Zentrierung | *Centre bore* (mm)	Gewinde | *Thread*	Gutachten | *Homologation*	ET-Grenze | *Offset frontier*
BMW													
3 Cabriolet (E36)													
3 Convertible (E36)	03.93 - 04.99	S1-1-12-50-25-17	10	1	S90-1-05-017	S90-1-05-017-B	S11	91105017	120/5	72,5	M12x1,5	T	15
	03.93 - 04.99	M12x1,5x25, KG60°	20	2	S90-2-10-004	S90-2-10-004-B	S10	91210004	120/5	72,5	M12x1,5	T	15
	03.93 - 04.99		30	2	S90-2-15-001	S90-2-15-001-B		91215001	120/5	72,5	M12x1,5	T	15
	03.93 - 04.99		40	7	S90-7-20-010	S90-7-20-010-B	S67	91720010	120/5	72,5	M12x1,5	T	15
	03.93 - 04.99		50	7	S90-7-25-011	S90-7-25-011-B		91725011	120/5	72,5	M12x1,5	T	15
	03.93 - 04.99		60	7	S90-7-30-002	S90-7-30-002-B		91730002	120/5	72,5	M12x1,5	T	15
3 Cabriolet (E46)													
3 Convertible (E46)	04.00 - 12.07	S1-1-12-50-25-17	10	1	S90-1-05-017	S90-1-05-017-B		91105017	120/5	72,5	M12x1,5	T	15
	04.00 - 12.07	M12x1,5x25, KG60°	20	2	S90-2-10-004	S90-2-10-004-B	S10	91210004	120/5	72,5	M12x1,5	T	15
	04.00 - 12.07		24	2	S90-2-12-002	S90-2-12-002-B		91212002	120/5	72,5	M12x1,5	T	15
	04.00 - 12.07		30	2	S90-2-15-001	S90-2-15-001-B		91215001	120/5	72,5	M12x1,5	T	15
	04.00 - 12.07		40	2	S90-2-20-020	S90-2-20-020-B		91220020	120/5	72,5	M12x1,5	T	15
	04.00 - 12.07		40	7	S90-7-20-010	S90-7-20-010-B	S67	91720010	120/5	72,5	M12x1,5	T	15
	04.00 - 12.07		50	7	S90-7-25-011	S90-7-25-011-B		91725011	120/5	72,5	M12x1,5	T	15
	04.00 - 12.07		60	7	S90-7-30-002	S90-7-30-002-B		91730002	120/5	72,5	M12x1,5	T	15
3 Cabriolet (E93)													
3 Convertible (E93)	08.06 -	S1-1-12-50-25-17	10	1	S90-1-05-017	S90-1-05-017-B	S6, S11	91105017	120/5	72,5	M12x1,5	T	4
	08.06 -	M12x1,5x25, KG60°	20	2	S90-2-10-004	S90-2-10-004-B	S10	91210004	120/5	72,5	M12x1,5	T	4
	08.06 -		24	2	S90-2-12-002	S90-2-12-002-B		91212002	120/5	72,5	M12x1,5	T	4
	08.06 -		30	2	S90-2-15-001	S90-2-15-001-B		91215001	120/5	72,5	M12x1,5	T	4
	08.06 -		40	2	S90-2-20-020	S90-2-20-020-B		91220020	120/5	72,5	M12x1,5	T	4
	08.06 -		40	7	S90-7-20-010	S90-7-20-010-B	S67	91720010	120/5	72,5	M12x1,5	T	4
	08.06 -		50	7	S90-7-25-011	S90-7-25-011-B		91725011	120/5	72,5	M12x1,5	T	4
	08.06 -		60	7	S90-7-30-002	S90-7-30-002-B		91730002	120/5	72,5	M12x1,5	T	4
3 Compact (E36)													
	03.94 - 08.00	S1-1-12-50-25-17	10	1	S90-1-05-017	S90-1-05-017-B	S11	91105017	120/5	72,5	M12x1,5	T	15
	03.94 - 08.00	M12x1,5x25, KG60°	20	2	S90-2-10-004	S90-2-10-004-B	S10	91210004	120/5	72,5	M12x1,5	T	15
	03.94 - 08.00		30	2	S90-2-15-001	S90-2-15-001-B		91215001	120/5	72,5	M12x1,5	T	15
	03.94 - 08.00		40	7	S90-7-20-010	S90-7-20-010-B	S67	91720010	120/5	72,5	M12x1,5	T	15
	03.94 - 08.00		50	7	S90-7-25-011	S90-7-25-011-B		91725011	120/5	72,5	M12x1,5	T	15
	03.94 - 08.00		60	7	S90-7-30-002	S90-7-30-002-B		91730002	120/5	72,5	M12x1,5	T	15
3 Compact (E46)													
	06.01 - 02.05	S1-1-12-50-25-17	10	1	S90-1-05-017	S90-1-05-017-B		91105017	120/5	72,5	M12x1,5	T	26
	06.01 - 02.05	M12x1,5x25, KG60°	20	2	S90-2-10-004	S90-2-10-004-B	S10	91210004	120/5	72,5	M12x1,5	T	26
	06.01 - 02.05		24	2	S90-2-12-002	S90-2-12-002-B		91212002	120/5	72,5	M12x1,5	T	26
	06.01 - 02.05		30	2	S90-2-15-001	S90-2-15-001-B		91215001	120/5	72,5	M12x1,5	T	26
	06.01 - 02.05		40	2	S90-2-20-020	S90-2-20-020-B		91220020	120/5	72,5	M12x1,5	T	26
	06.01 - 02.05		40	7	S90-7-20-010	S90-7-20-010-B	S67	91720010	120/5	72,5	M12x1,5	T	26
	06.01 - 02.05		50	7	S90-7-25-011	S90-7-25-011-B		91725011	120/5	72,5	M12x1,5	T	26
	06.01 - 02.05		60	7	S90-7-30-002	S90-7-30-002-B		91730002	120/5	72,5	M12x1,5	T	26
3 Coupe (E36)													
	03.92 - 04.99	S1-1-12-50-25-17	10	1	S90-1-05-017	S90-1-05-017-B	S11	91105017	120/5	72,5	M12x1,5	T	15
	03.92 - 04.99	M12x1,5x25, KG60°	20	2	S90-2-10-004	S90-2-10-004-B	S10	91210004	120/5	72,5	M12x1,5	T	15
	03.92 - 04.99		30	2	S90-2-15-001	S90-2-15-001-B		91215001	120/5	72,5	M12x1,5	T	15
	03.92 - 04.99		40	7	S90-7-20-010	S90-7-20-010-B	S67	91720010	120/5	72,5	M12x1,5	T	15
	03.92 - 04.99		50	7	S90-7-25-011	S90-7-25-011-B		91725011	120/5	72,5	M12x1,5	T	15
	03.92 - 04.99		60	7	S90-7-30-002	S90-7-30-002-B		91730002	120/5	72,5	M12x1,5	T	15
3 Coupe (E46)													
	04.99 - 07.06	S1-1-12-50-25-17	10	1	S90-1-05-017	S90-1-05-017-B		91105017	120/5	72,5	M12x1,5	T	15
	04.99 - 07.06	M12x1,5x25, KG60°	20	2	S90-2-10-004	S90-2-10-004-B	S10	91210004	120/5	72,5	M12x1,5	T	15
	04.99 - 07.06		24	2	S90-2-12-002	S90-2-12-002-B		91212002	120/5	72,5	M12x1,5	T	15
	04.99 - 07.06		30	2	S90-2-15-001	S90-2-15-001-B		91215001	120/5	72,5	M12x1,5	T	15
	04.99 - 07.06		40	2	S90-2-20-020	S90-2-20-020-B		91220020	120/5	72,5	M12x1,5	T	15
	04.99 - 07.06		40	7	S90-7-20-010	S90-7-20-010-B	S67	91720010	120/5	72,5	M12x1,5	T	15
	04.99 - 07.06		50	7	S90-7-25-011	S90-7-25-011-B		91725011	120/5	72,5	M12x1,5	T	15
	04.99 - 07.06		60	7	S90-7-30-002	S90-7-30-002-B		91730002	120/5	72,5	M12x1,5	T	15
3 Coupe (E92)													
	06.06 -	S1-1-12-50-25-17	10	1	S90-1-05-017	S90-1-05-017-B	S6, S11	91105017	120/5	72,5	M12x1,5	T	4
	06.06 -	M12x1,5x25, KG60°	20	2	S90-2-10-004	S90-2-10-004-B	S10	91210004	120/5	72,5	M12x1,5	T	4
	06.06 -		24	2	S90-2-12-002	S90-2-12-002-B		91212002	120/5	72,5	M12x1,5	T	4
	06.06 -		30	2	S90-2-15-001	S90-2-15-001-B		91215001	120/5	72,5	M12x1,5	T	4
	06.06 -		40	2	S90-2-20-020	S90-2-20-020-B	S70	91220020	120/5	72,5	M12x1,5	T	4
	06.06 -		40	7	S90-7-20-010	S90-7-20-010-B	S67, S70	91720010	120/5	72,5	M12x1,5	T	4
	06.06 -		50	7	S90-7-25-011	S90-7-25-011-B	S70	91725011	120/5	72,5	M12x1,5	T	4
	06.06 -		60	7	S90-7-30-002	S90-7-30-002-B	S70	91730002	120/5	72,5	M12x1,5	T	4
3 GRAN TURISMO (F34)													
	03.13 -	S1-1-14-25-27-17	20	2	S90-2-10-004	S90-2-10-004-B	S3	91210004	120/5	72,5	M14x1,25	T	10
	03.13 -	M14x1,25x27, KG60°	24	2	S90-2-12-002	S90-2-12-002-B		91212002	120/5	72,5	M14x1,25	T	10
	03.13 -		30	2	S90-2-15-001	S90-2-15-001-B		91215001	120/5	72,5	M14x1,25	T	10
	03.13 -		40	2	S90-2-20-020	S90-2-20-020-B		91220020	120/5	72,5	M14x1,25	T	10
	03.13 -		40	7	S90-7-20-036	S90-7-20-036-B	S46	91720036	120/5	72,5	M14x1,25	T	10
	03.13 -		50	7	S90-7-25-038	S90-7-25-038-B		91725038	120/5	72,5	M14x1,25	§21	10
	03.13 -		60	7	S90-7-30-032	S90-7-30-032-B		91730032	120/5	72,5	M14x1,25	§21	10
3 Touring (E30)													
3 Station Wagon (E30)	07.87 - 10.94	S1-1-12-50-25-17	10	1	S90-1-05-010	S90-1-05-010-B	S11	91105010	100/4	57	M12x1,5	T	15
	07.87 - 10.94	M12x1,5x25, KG60°	16	1	S90-1-08-003	S90-1-08-003-B	S11	91108003	100/4	57	M12x1,5	T	15
	07.87 - 10.94		30	2	S90-2-15-004	S90-2-15-004-B	S13	91215004	100/4	57	M12x1,5	T	15
	07.87 - 10.94		40	2	S90-2-20-011	S90-2-20-011-B		91220011	100/4	57	M12x1,5	§21	15
	07.87 - 10.94		50	7	S90-7-25-001			91725001	100/4	57	M12x1,5	§21	15
3 Touring (E36)													
3 Station Wagon (E36)	01.95 - 10.99	S1-1-12-50-25-17	10	1	S90-1-05-017	S90-1-05-017-B	S11	91105017	120/5	72,5	M12x1,5	T	15
	01.95 - 10.99	M12x1,5x25, KG60°	20	2	S90-2-10-004	S90-2-10-004-B	S10	91210004	120/5	72,5	M12x1,5	T	15
	01.95 - 10.99		30	2	S90-2-15-001	S90-2-15-001-B		91215001	120/5	72,5	M12x1,5	T	15
	01.95 - 10.99		40	7	S90-7-20-010	S90-7-20-010-B	S67	91720010	120/5	72,5	M12x1,5	T	15
	01.95 - 10.99		50	7	S90-7-25-011	S90-7-25-011-B		91725011	120/5	72,5	M12x1,5	T	15
	01.95 - 10.99		60	7	S90-7-30-002	S90-7-30-002-B		91730002	120/5	72,5	M12x1,5	T	15
3 Touring (E46)													
3 Station Wagon (E46)	10.99 - 02.05	S1-1-12-50-25-17	10	1	S90-1-05-017	S90-1-05-017-B		91105017	120/5	72,5	M12x1,5	T	15
	10.99 - 02.05	M12x1,5x25, KG60°	20	2	S90-2-10-004	S90-2-10-004-B	S10	91210004	120/5	72,5	M12x1,5	T	15
	10.99 - 02.05		24	2	S90-2-12-002	S90-2-12-002-B		91212002	120/5	72,5	M12x1,5	T	15
	10.99 - 02.05		30	2	S90-2-15-001	S90-2-15-001-B		91215001	120/5	72,5	M12x1,5	T	15
	10.99 - 02.05		40	2	S90-2-20-020	S90-2-20-020-B		91220020	120/5	72,5	M12x1,5	T	15
	10.99 - 02.05		40	7	S90-7-20-010	S90-7-20-010-B	S67	91720010	120/5	72,5	M12x1,5	T	15
	10.99 - 02.05		50	7	S90-7-25-011	S90-7-25-011-B		91725011	120/5	72,5	M12x1,5	T	15
	10.99 - 02.05		60	7	S90-7-30-002	S90-7-30-002-B		91730002	120/5	72,5	M12x1,5	T	15

Modell | *Model*	Baujahr | *Year*	Original-radschraube (nicht bestellbar) | *Original Bolt (not available)*	Spurweiten-änd. Achse | *Total track widening* (mm)	Eibach System	Artikel-Nr. silber | *Part-No. silver*	Artikel-Nr. schwarz | *Part-No. black*	Hinweise | *Notes*	Kennzeichnung | *Stamping*	Lochkreis | - Anzahl | *Bolt pattern* | *No. of holes*	Zentrierung | *Centre bore* (mm)	Gewinde | *Thread*	Gutachten | *Homologation*	ET-Grenze | *Offset frontier*
BMW													
3 Touring (E91)													
3 Station Wagon (E91)	09.05 - 06.12	S1-1-12-50-25-17	10	1	S90-1-05-017	S90-1-05-017-B	S6, S11	91105017	120/5	72,5	M12x1,5	T	4
	09.05 - 06.12	M12x1,5x25, KG60°	20	2	S90-2-10-004	S90-2-10-004-B	S10	91210004	120/5	72,5	M12x1,5	T	4
	09.05 - 06.12		24	2	S90-2-12-002	S90-2-12-002-B		91212002	120/5	72,5	M12x1,5	T	4
	09.05 - 06.12		30	2	S90-2-15-001	S90-2-15-001-B		91215001	120/5	72,5	M12x1,5	T	4
	09.05 - 06.12		40	2	S90-2-20-020	S90-2-20-020-B	S70	91220020	120/5	72,5	M12x1,5	T	4
	09.05 - 06.12		40	7	S90-7-20-010	S90-7-20-010-B	S67, S70	91720010	120/5	72,5	M12x1,5	T	4
	09.05 - 06.12		50	7	S90-7-25-011	S90-7-25-011-B	S70	91725011	120/5	72,5	M12x1,5	T	4
	09.05 - 06.12		60	7	S90-7-30-002	S90-7-30-002-B	S70	91730002	120/5	72,5	M12x1,5	T	4
3 Touring (F31)													
3 Station Wagon (F31)	10.11 -	S1-1-14-25-27-17	20	2	S90-2-10-004	S90-2-10-004-B	S3	91210004	120/5	72,5	M14x1,25	T	1
	06.12 -	M14x1,25x27, KG60°	24	2	S90-2-12-002	S90-2-12-002-B		91212002	120/5	72,5	M14x1,25	T	1
	06.12 -		30	2	S90-2-15-001	S90-2-15-001-B		91215001	120/5	72,5	M14x1,25	T	1
	06.12 -		40	2	S90-2-20-020	S90-2-20-020-B		91220020	120/5	72,5	M14x1,25	T	1
	06.12 -		40	7	S90-7-20-036	S90-7-20-036-B	S46	91720036	120/5	72,5	M14x1,25	T	1
	06.12 -		50	7	S90-7-25-038	S90-7-25-038-B		91725038	120/5	72,5	M14x1,25	T	1
	06.12 -		60	7	S90-7-30-032	S90-7-30-032-B		91730032	120/5	72,5	M14x1,25	T	1
4 Coupe (F32)													
	07.13 -	S1-1-14-25-27-17	20	2	S90-2-10-004	S90-2-10-004-B	S3	91210004	120/5	72,5	M14x1,25	T	4
	07.13 -	M14x1,25x27, KG60°	24	2	S90-2-12-002	S90-2-12-002-B		91212002	120/5	72,5	M14x1,25	T	4
	07.13 -		30	2	S90-2-15-001	S90-2-15-001-B		91215001	120/5	72,5	M14x1,25	T	4
	07.13 -		40	2	S90-2-20-020	S90-2-20-020-B		91220020	120/5	72,5	M14x1,25	T	4
	07.13 -		40	7	S90-7-20-036	S90-7-20-036-B	S46	91720036	120/5	72,5	M14x1,25	T	4
	07.13 -		50	7	S90-7-25-038	S90-7-25-038-B		91725038	120/5	72,5	M14x1,25	T	4
	07.13 -		60	7	S90-7-30-032	S90-7-30-032-B		91730032	120/5	72,5	M14x1,25	T	4
4 Cabriolet (F33, F83)													
4 Convertible (F33)	10.13 -	S1-1-14-25-27-17	20	2	S90-2-10-004	S90-2-10-004-B	S76	91210004	120/5	72,5	M14x1,25	T	4
	10.13 -	M14x1,25x27, KG60°	24	2	S90-2-12-002	S90-2-12-002-B	S76	91212002	120/5	72,5	M14x1,25	T	4
	10.13 -		30	2	S90-2-15-001	S90-2-15-001-B	S76	91215001	120/5	72,5	M14x1,25	T	4
	10.13 -		40	2	S90-2-20-020	S90-2-20-020-B		91220020	120/5	72,5	M14x1,25	T	4
	10.13 -		40	7	S90-7-20-036	S90-7-20-036-B	S46	91720036	120/5	72,5	M14x1,25	T	4
	10.13 -		50	7	S90-7-25-038	S90-7-25-038-B		91725038	120/5	72,5	M14x1,25	T	4
	10.13 -		60	7	S90-7-30-032	S90-7-30-032-B		91730032	120/5	72,5	M14x1,25	T	4
4 Grand Coupe (F36)													
	03.14 -	S1-1-14-25-27-17	20	2	S90-2-10-004	S90-2-10-004-B	S76	91210004	120/5	72,5	M14x1,25	T	4
	03.14 -	M14x1,25x27, KG60°	24	2	S90-2-12-002	S90-2-12-002-B	S76	91212002	120/5	72,5	M14x1,25	T	4
	03.14 -		30	2	S90-2-15-001	S90-2-15-001-B	S76	91215001	120/5	72,5	M14x1,25	T	4
	03.14 -		40	2	S90-2-20-020	S90-2-20-020-B		91220020	120/5	72,5	M14x1,25	T	4
	03.14 -		40	7	S90-7-20-036	S90-7-20-036-B	S46	91720036	120/5	72,5	M14x1,25	T	4
	03.14 -		50	7	S90-7-25-038	S90-7-25-038-B		91725038	120/5	72,5	M14x1,25	T	4
	03.14 -		60	7	S90-7-30-032	S90-7-30-032-B		91730032	120/5	72,5	M14x1,25	T	4
5 (E34)													
	12.87 - 11.95	S1-1-12-50-25-17	10	1	S90-1-05-017	S90-1-05-017-B	S11	91105017	120/5	72,5	M12x1,5	T	5
	12.87 - 11.95	M12x1,5x25, KG60°	30	2	S90-2-15-001	S90-2-15-001-B		91215001	120/5	72,5	M12x1,5	T	5
	12.87 - 11.95		40	7	S90-7-20-010	S90-7-20-010-B	S67	91720010	120/5	72,5	M12x1,5	T	5
	12.87 - 11.95		50	7	S90-7-25-011	S90-7-25-011-B		91725011	120/5	72,5	M12x1,5	T	5
	12.87 - 11.95		60	7	S90-7-30-002	S90-7-30-002-B		91730002	120/5	72,5	M12x1,5	T	5
5 (E39)													
	11.95 - 06.03	S1-1-12-50-25-17	10	1	S90-1-05-007	S90-1-05-007-B		91105007	120/5	74	M12x1,5	T	4
	11.95 - 06.03	M12x1,5x25, KG60°	30	2	S90-2-15-002	S90-2-15-002-B		91215002	120/5	74	M12x1,5	T	4
	11.95 - 06.03		40	7	S90-7-20-002	S90-7-20-002-B		91720002	120/5	74	M12x1,5	T	4
5 (E60)													
	07.03 - 03.10	S1-1-12-50-25-17	10	1	S90-1-05-017	S90-1-05-017-B	S11	91105017	120/5	72,5	M12x1,5	T	-10
	07.03 - 03.10	M12x1,5x25, KG60°	20	2	S90-2-10-004	S90-2-10-004-B	S10	91210004	120/5	72,5	M12x1,5	T	-10
	07.03 - 03.10		24	2	S90-2-12-002	S90-2-12-002-B		91212002	120/5	72,5	M12x1,5	T	-10
	07.03 - 03.10		30	2	S90-2-15-001	S90-2-15-001-B		91215001	120/5	72,5	M12x1,5	T	-10
	07.03 - 03.10		40	2	S90-2-20-020	S90-2-20-020-B		91220020	120/5	72,5	M12x1,5	T	-10
	07.03 - 03.10		40	7	S90-7-20-010	S90-7-20-010-B	S67	91720010	120/5	72,5	M12x1,5	T	-10
	07.03 - 03.10		50	7	S90-7-25-011	S90-7-25-011-B		91725011	120/5	72,5	M12x1,5	T	-10
	07.03 - 03.10		60	7	S90-7-30-002	S90-7-30-002-B		91730002	120/5	72,5	M12x1,5	T	-10
5 (F10, F18)													
	12.09 -	S1-1-14-25-28-17	20	2	S90-2-10-004	S90-2-10-004-B	S10	91210004	120/5	72,5	M14x1,25	T	0
	12.09 -	M14x1,25x28, KG60°	24	2	S90-2-12-002	S90-2-12-002-B		91212002	120/5	72,5	M14x1,25	T	0
	12.09 -		30	2	S90-2-15-001	S90-2-15-001-B		91215001	120/5	72,5	M14x1,25	T	0
	12.09 -		40	2	S90-2-20-020	S90-2-20-020-B		91220020	120/5	72,5	M14x1,25	T	0
	12.09 -		50	7	S90-7-25-038	S90-7-25-038-B		91725038	120/5	72,5	M14x1,25	T	0
	12.09 -		60	7	S90-7-30-032	S90-7-30-032-B		91730032	120/5	72,5	M14x1,25	T	0
5 GRAN TURISMO (GT)													
	10.09 -	S1-1-14-25-28-17	20	2	S90-2-10-004	S90-2-10-004-B	S10	91210004	120/5	72,5	M14x1,25	T	-5
	10.09 -	M14x1,25x28, KG60°	24	2	S90-2-12-002	S90-2-12-002-B		91212002	120/5	72,5	M14x1,25	T	-5
	10.09 -		30	2	S90-2-15-001	S90-2-15-001-B		91215001	120/5	72,5	M14x1,25	T	-5
	10.09 -		40	2	S90-2-20-020	S90-2-20-020-B		91220020	120/5	72,5	M14x1,25	T	-5
	10.09 -		50	7	S90-7-25-038	S90-7-25-038-B		91725038	120/5	72,5	M14x1,25	T	-5
	10.09 -		60	7	S90-7-30-032	S90-7-30-032-B		91730032	120/5	72,5	M14x1,25	T	-5
5 Touring (E34)													
5 Station Wagon (E34)	11.91 - 01.97	S1-1-12-50-25-17	10	1	S90-1-05-017	S90-1-05-017-B	S11	91105017	120/5	72,5	M12x1,5	T	5
	11.91 - 01.97	M12x1,5x25, KG60°	30	2	S90-2-15-001	S90-2-15-001-B		91215001	120/5	72,5	M12x1,5	T	5
	11.91 - 01.97		40	7	S90-7-20-010	S90-7-20-010-B	S67	91720010	120/5	72,5	M12x1,5	T	5
	11.91 - 01.97		50	7	S90-7-25-011	S90-7-25-011-B		91725011	120/5	72,5	M12x1,5	T	5
	11.91 - 01.97		60	7	S90-7-30-002	S90-7-30-002-B		91730002	120/5	72,5	M12x1,5	T	5
5 Touring (E39)													
5 Station Wagon (E39)	01.97 - 05.04	S1-1-12-50-25-17	10	1	S90-1-05-007	S90-1-05-007-B		91105007	120/5	74	M12x1,5	T	4
	01.97 - 05.04	M12x1,5x25, KG60°	30	2	S90-2-15-002	S90-2-15-002-B		91215002	120/5	74	M12x1,5	T	4
	01.97 - 05.04		40	7	S90-7-20-002	S90-7-20-002-B		91720002	120/5	74	M12x1,5	T	4
5 Touring (E61)													
5 Station Wagon (E61)	06.04 -	S1-1-12-50-25-17	10	1	S90-1-05-017	S90-1-05-017-B	S11	91105017	120/5	72,5	M12x1,5	T	-10
	06.04 -	M12x1,5x25, KG60°	20	2	S90-2-10-004	S90-2-10-004-B	S10	91210004	120/5	72,5	M12x1,5	T	-10
	06.04 -		24	2	S90-2-12-002	S90-2-12-002-B		91212002	120/5	72,5	M12x1,5	T	-10
	06.04 -		30	2	S90-2-15-001	S90-2-15-001-B		91215001	120/5	72,5	M12x1,5	T	-10
	06.04 -		40	2	S90-2-20-020	S90-2-20-020-B		91220020	120/5	72,5	M12x1,5	T	-10
	06.04 -		40	7	S90-7-20-010	S90-7-20-010-B	S67	91720010	120/5	72,5	M12x1,5	T	-10
	06.04 -		50	7	S90-7-25-011	S90-7-25-011-B		91725011	120/5	72,5	M12x1,5	T	-10
	06.04 -		60	7	S90-7-30-002	S90-7-30-002-B		91730002	120/5	72,5	M12x1,5	T	-10
5 Touring (F11)													
5 Station Wagon (F11)	04.10 -	S1-1-14-25-28-17	20	2	S90-2-10-004	S90-2-10-004-B	S10	91210004	120/5	72,5	M14x1,25	T	0
	04.10 -	M14x1,25x28, KG60°	24	2	S90-2-12-002	S90-2-12-002-B		91212002	120/5	72,5	M14x1,25	T	0
	04.10 -		30	2	S90-2-15-001	S90-2-15-001-B		91215001	120/5	72,5	M14x1,25	T	0
	04.10 -		40	2	S90-2-20-020	S90-2-20-020-B		91220020	120/5	72,5	M14x1,25	T	0
	04.10 -		50	7	S90-7-25-038	S90-7-25-038-B		91725038	120/5	72,5	M14x1,25	T	0
	04.10 -		60	7	S90-7-30-032	S90-7-30-032-B		91730032	120/5	72,5	M14x1,25	T	0

Modell | *Model*	Baujahr | *Year*	Original-radschraube (nicht bestellbar) | *Original Bolt (not available)*	Spurweiten-änd. Achse | *Total track widening* (mm)	Eibach System	Artikel-Nr. silber | *Part-No. silver*	Artikel-Nr. schwarz | *Part-No. black*	Hinweise | *Notes*	Kennzeichnung | *Stamping*	Lochkreis | - Anzahl | *Bolt pattern* | *No. of holes*	Zentrierung | *Centre bore* (mm)	Gewinde | *Thread*	Gutachten | *Homologation*	ET-Grenze | *Offset frontier*
BMW													
6 (E63)													
	01.04 -	S1-1-12-50-25-17	10	1	S90-1-05-017	S90-1-05-017-B	S11	91105017	120/5	72,5	M12x1,5	T	-1
	01.04 -	M12x1,5x25, KG60°	20	2	S90-2-10-004	S90-2-10-004-B	S10	91210004	120/5	72,5	M12x1,5	T	-1
	01.04 -		24	2	S90-2-12-002	S90-2-12-002-B		91212002	120/5	72,5	M12x1,5	T	-1
	01.04 -		30	2	S90-2-15-001	S90-2-15-001-B		91215001	120/5	72,5	M12x1,5	T	-1
	01.04 -		40	2	S90-2-20-020	S90-2-20-020-B		91220020	120/5	72,5	M12x1,5	T	-1
	01.04 -		40	7	S90-7-20-010	S90-7-20-010-B	S67	91720010	120/5	72,5	M12x1,5	T	-1
	01.04 -		50	7	S90-7-25-011	S90-7-25-011-B		91725011	120/5	72,5	M12x1,5	T	-1
	01.04 -		60	7	S90-7-30-002	S90-7-30-002-B		91730002	120/5	72,5	M12x1,5	T	-1
6 (F13)													
	11.10 -	S1-1-14-25-27-17	20	2	S90-2-10-004	S90-2-10-004-B	S10	91210004	120/5	72,5	M14x1,25	T	5
	11.10 -	M14x1,25x27, KG60°	24	2	S90-2-12-002	S90-2-12-002-B		91212002	120/5	72,5	M14x1,25	T	5
	11.10 -		30	2	S90-2-15-001	S90-2-15-001-B		91215001	120/5	72,5	M14x1,25	T	5
	11.10 -		40	2	S90-2-20-020	S90-2-20-020-B		91220020	120/5	72,5	M14x1,25	T	5
	11.10 -		40	7	S90-7-20-036	S90-7-20-036-B	S46	91720036	120/5	72,5	M14x1,25	T	5
	11.10 -		50	7	S90-7-25-038	S90-7-25-038-B		91725038	120/5	72,5	M14x1,25	T	5
	11.10 -		60	7	S90-7-30-032	S90-7-30-032-B		91730032	120/5	72,5	M14x1,25	T	5
6 Cabriolet (E64)													
6 Convertible (E64)	04.04 -	S1-1-12-50-25-17	10	1	S90-1-05-017	S90-1-05-017-B	S11	91105017	120/5	72,5	M12x1,5	T	-1
	04.04 -	M12x1,5x25, KG60°	20	2	S90-2-10-004	S90-2-10-004-B	S10	91210004	120/5	72,5	M12x1,5	T	-1
	04.04 -		24	2	S90-2-12-002	S90-2-12-002-B		91212002	120/5	72,5	M12x1,5	T	-1
	04.04 -		30	2	S90-2-15-001	S90-2-15-001-B		91215001	120/5	72,5	M12x1,5	T	-1
	04.04 -		40	2	S90-2-20-020	S90-2-20-020-B		91220020	120/5	72,5	M12x1,5	T	-1
	04.04 -		40	7	S90-7-20-010	S90-7-20-010-B	S67	91720010	120/5	72,5	M12x1,5	T	-1
	04.04 -		50	7	S90-7-25-011	S90-7-25-011-B		91725011	120/5	72,5	M12x1,5	T	-1
	04.04 -		60	7	S90-7-30-002	S90-7-30-002-B		91730002	120/5	72,5	M12x1,5	T	-1
6 Cabriolet (F12)													
6 Convertible (F12)	03.11 -	S1-1-14-25-27-17	20	2	S90-2-10-004	S90-2-10-004-B	S10	91210004	120/5	72,5	M14x1,25	T	5
	03.11 -	M14x1,25x27, KG60°	24	2	S90-2-12-002	S90-2-12-002-B		91212002	120/5	72,5	M14x1,25	T	5
	03.11 -		30	2	S90-2-15-001	S90-2-15-001-B		91215001	120/5	72,5	M14x1,25	T	5
	03.11 -		40	2	S90-2-20-020	S90-2-20-020-B		91220020	120/5	72,5	M14x1,25	T	5
	03.11 -		40	7	S90-7-20-036	S90-7-20-036-B	S46	91720036	120/5	72,5	M14x1,25	T	5
	03.11 -		50	7	S90-7-25-038	S90-7-25-038-B		91725038	120/5	72,5	M14x1,25	T	5
	03.11 -		60	7	S90-7-30-032	S90-7-30-032-B		91730032	120/5	72,5	M14x1,25	T	5
6 Gran Coupe (F06)													
	09.11 -	S1-1-14-25-27-17	20	2	S90-2-10-004	S90-2-10-004-B	S10	91210004	120/5	72,5	M14x1,25	T	5
	09.11 -	M14x1,25x27, KG60°	24	2	S90-2-12-002	S90-2-12-002-B		91212002	120/5	72,5	M14x1,25	T	5
	09.11 -		30	2	S90-2-15-001	S90-2-15-001-B		91215001	120/5	72,5	M14x1,25	T	5
	09.11 -		40	2	S90-2-20-020	S90-2-20-020-B		91220020	120/5	72,5	M14x1,25	T	5
	09.11 -		40	7	S90-7-20-036	S90-7-20-036-B	S46	91720036	120/5	72,5	M14x1,25	T	5
	09.11 -		50	7	S90-7-25-038	S90-7-25-038-B		91725038	120/5	72,5	M14x1,25	T	5
	09.11 -		60	7	S90-7-30-032	S90-7-30-032-B		91730032	120/5	72,5	M14x1,25	T	5
7 (E38)													
	10.94 - 11.01	S1-1-12-50-25-17	10	1	S90-1-05-017	S90-1-05-017-B		91105017	120/5	72,5	M12x1,5	§21	
	10.94 - 11.01	M12x1,5x25, KG60°	20	2	S90-2-10-004	S90-2-10-004-B	S6	91210004	120/5	72,5	M12x1,5	§21	
	10.94 - 11.01		30	2	S90-2-15-001	S90-2-15-001-B		91215001	120/5	72,5	M12x1,5	§21	
	10.94 - 11.01		40	7	S90-7-20-010	S90-7-20-010-B	S67	91720010	120/5	72,5	M12x1,5	§21	
	10.94 - 11.01		50	7	S90-7-25-011	S90-7-25-011-B		91725011	120/5	72,5	M12x1,5	§21	
	10.94 - 11.01		60	7	S90-7-30-002	S90-7-30-002-B		91730002	120/5	72,5	M12x1,5	§21	
7 (E65, E66, E67)													
	11.01 -	S1-1-14-50-33-17	10	1	S90-1-05-017	S90-1-05-017-B		91105017	120/5	72,5	M14x1,5	T	5
	11.01 -	M14x1,5x33, KG60°	20	2	S90-2-10-004	S90-2-10-004-B	S6	91210004	120/5	72,5	M14x1,5	T	5
	11.01 -		30	2	S90-2-15-001	S90-2-15-001-B		91215001	120/5	72,5	M14x1,5	T	5
	11.01 -		40	7	S90-7-20-011	S90-7-20-011-B		91720011	120/5	72,5	M14x1,5	T	5
	11.01 -		50	7	S90-7-25-012	S90-7-25-012-B		91725012	120/5	72,5	M14x1,5	T	5
	11.01 -		60	7	S90-7-30-003	S90-7-30-003-B		91730003	120/5	72,5	M14x1,5	T	5
7 (F01, F02, F03, F04)													
	06.08 -	S1-1-14-25-28-17	20	2	S90-2-10-004	S90-2-10-004-B	S10	91210004	120/5	72,5	M14x1,25	T	0
	06.08 -	M14x1,25x28, KG60°	24	2	S90-2-12-002	S90-2-12-002-B		91212002	120/5	72,5	M14x1,25	T	0
	06.08 -		30	2	S90-2-15-001	S90-2-15-001-B		91215001	120/5	72,5	M14x1,25	T	0
	06.08 -		40	2	S90-2-20-020	S90-2-20-020-B		91220020	120/5	72,5	M14x1,25	T	0
	06.08 -		50	7	S90-7-25-038	S90-7-25-038-B		91725038	120/5	72,5	M14x1,25	T	0
	06.08 -		60	7	S90-7-30-032	S90-7-30-032-B		91730032	120/5	72,5	M14x1,25	T	0
X1 (E84)													
	03.09 -	S1-1-12-50-26-17	20	2	S90-2-10-004	S90-2-10-004-B	S10	91210004	120/5	72,5	M12x1,5	T	5
	03.09 -	M12x1,5x26, KG60°	24	2	S90-2-12-002	S90-2-12-002-B		91212002	120/5	72,5	M12x1,5	T	5
	03.09 -		30	2	S90-2-15-001	S90-2-15-001-B		91215001	120/5	72,5	M12x1,5	T	5
	03.09 -		40	2	S90-2-20-020	S90-2-20-020-B		91220020	120/5	72,5	M12x1,5	T	5
	03.09 -		40	7	S90-7-20-010	S90-7-20-010-B	S67	91720010	120/5	72,5	M12x1,5	T	5
	03.09 -		50	7	S90-7-25-011	S90-7-25-011-B		91725011	120/5	72,5	M12x1,5	T	5
	03.09 -		60	7	S90-7-30-002	S90-7-30-002-B		91730002	120/5	72,5	M12x1,5	T	5
X3 (E83)													
	01.04 -	S1-1-14-50-33-17	10	1	S90-1-05-017	S90-1-05-017-B		91105017	120/5	72,5	M14x1,5	T	16
	01.04 -	M14x1,5x33, KG60°	20	2	S90-2-10-004	S90-2-10-004-B	S10	91210004	120/5	72,5	M14x1,5	T	16
	01.04 -		24	2	S90-2-12-002	S90-2-12-002-B		91212002	120/5	72,5	M14x1,5	T	16
	01.04 -		30	2	S90-2-15-001	S90-2-15-001-B		91215001	120/5	72,5	M14x1,5	T	16
	01.04 -		40	2	S90-2-20-020	S90-2-20-020-B		91220020	120/5	72,5	M14x1,5	T	16
	01.04 -		40	7	S90-7-20-033	S90-7-20-033-B	S34	91720011	120/5	72,5	M14x1,5	T	16
	01.04 -		50	7	S90-7-25-012	S90-7-25-012-B		91725012	120/5	72,5	M14x1,5	T	16
	01.04 -		60	7	S90-7-30-003	S90-7-30-003-B		91730003	120/5	72,5	M14x1,5	T	16
X3 (F25)													
	09.10 -	S1-1-14-25-27-17	20	2	S90-2-10-004	S90-2-10-004-B	S10	91210004	120/5	72,5	M14x1,25	T	2
	09.10 -	M14x1,25x27, KG60°	24	2	S90-2-12-002	S90-2-12-002-B		91212002	120/5	72,5	M14x1,25	T	2
	09.10 -		30	2	S90-2-15-001	S90-2-15-001-B		91215001	120/5	72,5	M14x1,25	T	2
	09.10 -		40	2	S90-2-20-020	S90-2-20-020-B		91220020	120/5	72,5	M14x1,25	T	2
	09.10 -		40	7	S90-7-20-036	S90-7-20-036-B	S46	91720036	120/5	72,5	M14x1,25	T	2
	09.10 -		50	7	S90-7-25-038	S90-7-25-038-B		91725038	120/5	72,5	M14x1,25	T	2
	09.10 -		60	7	S90-7-30-032	S90-7-30-032-B		91730032	120/5	72,5	M14x1,25	T	2
X4 (F26)													
	04.14 -	S1-1-14-25-27-17	20	2	S90-2-10-004	S90-2-10-004-B	S10	91210004	120/5	72,5	M14x1,25	T	2
	04.14 -	M14x1,25x27, KG60°	24	2	S90-2-12-002	S90-2-12-002-B		91212002	120/5	72,5	M14x1,25	T	2
	04.14 -		30	2	S90-2-15-001	S90-2-15-001-B		91215001	120/5	72,5	M14x1,25	T	2
	04.14 -		40	2	S90-2-20-020	S90-2-20-020-B		91220020	120/5	72,5	M14x1,25	T	2
	04.14 -		40	7	S90-7-20-036	S90-7-20-036-B	S46	91720036	120/5	72,5	M14x1,25	T	2
	04.14 -		50	7	S90-7-25-038	S90-7-25-038-B		91725038	120/5	72,5	M14x1,25	T	2
	04.14 -		60	7	S90-7-30-032	S90-7-30-032-B		91730032	120/5	72,5	M14x1,25	T	2

Modell | *Model*	Baujahr | *Year*	Original-radschraube (nicht bestellbar) | *Original Bolt (not available)*	Spurweiten-änd. Achse | *Total track widening* (mm)	Eibach System	Artikel-Nr. silber | *Part-No. silver*	Artikel-Nr. schwarz | *Part-No. black*	Hinweise | *Notes*	Kennzeichnung | *Stamping*	Lochkreis | - Anzahl | *Bolt pattern* | *No. of holes*	Zentrierung | *Centre bore* (mm)	Gewinde | *Thread*	Gutachten | *Homologation*	ET-Grenze | *Offset frontier*
BMW													
X5 (E53)													
	05.00 - 12.06	S4-1-14-50-33-17	10	1	S90-1-05-017	S90-1-05-017-B		91105017	120/5	72,5	M14x1,5	T	15
	05.00 - 12.06	M14x1,5x33, KG60°	20	2	S90-2-10-004	S90-2-10-004-B	S10	91210004	120/5	72,5	M14x1,5	T	15
	05.00 - 12.06		24	2	S90-2-12-002	S90-2-12-002-B		91212002	120/5	72,5	M14x1,5	T	15
	05.00 - 12.06		30	2	S90-2-15-001	S90-2-15-001-B		91215001	120/5	72,5	M14x1,5	T	15
	05.00 - 12.06		40	2	S90-2-20-020	S90-2-20-020-B		91220020	120/5	72,5	M14x1,5	T	15
	05.00 - 12.06		40	7	S90-7-20-011	S90-7-20-011-B	S35	91720011	120/5	72,5	M14x1,5	T	15
	05.00 - 12.06		50	7	S90-7-25-012	S90-7-25-012-B		91725012	120/5	72,5	M14x1,5	T	15
	05.00 - 12.06		60	7	S90-7-30-003	S90-7-30-003-B		91730003	120/5	72,5	M14x1,5	T	15
X5 (E70)													
	02.07 - 06.13	S1-1-14-25-27-17	24	2	S90-2-12-014	S90-2-12-014-B		91212014	120/5	74	M14x1,25	T	15
	02.07 - 06.13	M14x1,25x27, KG60°	30	2	S90-2-15-002	S90-2-15-002-B		91215002	120/5	74	M14x1,25	T	15
	02.07 - 06.13		40	2	S90-2-20-027	S90-2-20-027-B		91220027	120/5	74	M14x1,25	T	15
	02.07 - 06.13		40	7	S90-7-20-035	S90-7-20-035-B	S46	91720035	120/5	74	M14x1,25	T	15
	02.07 - 06.13		50	7	S90-7-25-032	S90-7-25-032-B		91725032	120/5	74	M14x1,25	T	15
	02.07 - 06.13		60	7	S90-7-30-026	S90-7-30-026-B		91730026	120/5	74	M14x1,25	T	15
X5 (F15, F85)													
	07.13 -	S1-1-14-25-27-17	24	2	S90-2-12-014	S90-2-12-014-B		91212014	120/5	74	M14x1,25	T	16
	07.13 -	M14x1,25x27, KG60°	30	2	S90-2-15-002	S90-2-15-002-B		91215002	120/5	74	M14x1,25	T	16
	07.13 -		40	2	S90-2-20-027	S90-2-20-027-B		91220027	120/5	74	M14x1,25	T	16
	07.13 -		40	7	S90-7-20-035	S90-7-20-035-B	S46	91720035	120/5	74	M14x1,25	T	16
	07.13 -		50	7	S90-7-25-032	S90-7-25-032-B		91725032	120/5	74	M14x1,25	T	16
	07.13 -		60	7	S90-7-30-026	S90-7-30-026-B		91730026	120/5	74	M14x1,25	T	16
X6 (E71, E72) Hinterachse													
X6 (E71, E72) rear axle	05.08 -	S1-1-14-25-27-17	24	2	S90-2-12-002	S90-2-12-002-B		91212002	120/5	72,5	M14x1,25	T	5
	05.08 -	M14x1,25x27, KG60°	30	2	S90-2-15-001	S90-2-15-001-B		91215001	120/5	72,5	M14x1,25	T	5
	05.08 -		40	2	S90-2-20-020	S90-2-20-020-B		91220020	120/5	72,5	M14x1,25	T	5
	05.08 -		40	7	S90-7-20-036	S90-7-20-036-B	S46	91720036	120/5	72,5	M14x1,25	T	5
	05.08 -		50	7	S90-7-25-038	S90-7-25-038-B		91725038	120/5	72,5	M14x1,25	T	5
	05.08 -		60	7	S90-7-30-032	S90-7-30-032-B		91730032	120/5	72,5	M14x1,25	T	5
X6 (E71, E72) Vorderachse													
X6 (E71, E72) front axle	05.08 -	S1-1-14-25-27-17	24	2	S90-2-12-014	S90-2-12-014-B		91212014	120/5	74	M14x1,25	T	5
	05.08 -	M14x1,25x27, KG60°	30	2	S90-2-15-002	S90-2-15-002-B		91215002	120/5	74	M14x1,25	T	5
	05.08 -		40	2	S90-2-20-027	S90-2-20-027-B		91220027	120/5	74	M14x1,25	T	5
	05.08 -		40	7	S90-7-20-035	S90-7-20-035-B	S46	91720035	120/5	74	M14x1,25	T	5
	05.08 -		50	7	S90-7-25-032	S90-7-25-032-B		91725032	120/5	74	M14x1,25	T	5
	05.08 -		60	7	S90-7-30-026	S90-7-30-026-B		91730026	120/5	74	M14x1,25	T	5
X6 (F16, F86)													
	08.14 -	S1-1-14-25-27-17	24	2	S90-2-12-014	S90-2-12-014-B		91212014	120/5	74	M14x1,25	T	-12
	08.14 -	M14x1,25x27, KG60°	30	2	S90-2-15-002	S90-2-15-002-B		91215002	120/5	74	M14x1,25	T	-12
	08.14 -		40	2	S90-2-20-027	S90-2-20-027-B		91220027	120/5	74	M14x1,25	T	-12
	08.14 -		40	7	S90-7-20-035	S90-7-20-035-B	S46	91720035	120/5	74	M14x1,25	T	-12
	08.14 -		50	7	S90-7-25-032	S90-7-25-032-B		91725032	120/5	74	M14x1,25	T	-12
	08.14 -		60	7	S90-7-30-026	S90-7-30-026-B		91730026	120/5	74	M14x1,25	T	-12
Z3 (E36)													
	10.95 - 01.03	S1-1-12-50-25-17	10	1	S90-1-05-017	S90-1-05-017-B	S11	91105017	120/5	72,5	M12x1,5	T	24
	10.95 - 01.03	M12x1,5x25, KG60°	20	2	S90-2-10-004	S90-2-10-004-B	S10	91210004	120/5	72,5	M12x1,5	T	24
	10.95 - 01.03		30	2	S90-2-15-001	S90-2-15-001-B		91215001	120/5	72,5	M12x1,5	T	24
	10.95 - 01.03		40	7	S90-7-20-010	S90-7-20-010-B	S67	91720010	120/5	72,5	M12x1,5	T	24
	10.95 - 01.03		50	7	S90-7-25-011	S90-7-25-011-B		91725011	120/5	72,5	M12x1,5	T	24
	10.95 - 01.03		60	7	S90-7-30-002	S90-7-30-002-B		91730002	120/5	72,5	M12x1,5	T	24
Z3 Coupe (E36)													
	04.97 - 06.03	S1-1-12-50-25-17	10	1	S90-1-05-017	S90-1-05-017-B	S11	91105017	120/5	72,5	M12x1,5	T	24
	04.97 - 06.03	M12x1,5x25, KG60°	20	2	S90-2-10-004	S90-2-10-004-B	S10	91210004	120/5	72,5	M12x1,5	T	24
	04.97 - 06.03		30	2	S90-2-15-001	S90-2-15-001-B		91215001	120/5	72,5	M12x1,5	T	24
	04.97 - 06.03		40	7	S90-7-20-010	S90-7-20-010-B	S67	91720010	120/5	72,5	M12x1,5	T	24
	04.97 - 06.03		50	7	S90-7-25-011	S90-7-25-011-B		91725011	120/5	72,5	M12x1,5	T	24
	04.97 - 06.03		60	7	S90-7-30-002	S90-7-30-002-B		91730002	120/5	72,5	M12x1,5	T	24
Z4 (Z85)													
	02.03 -	S1-1-12-50-25-17	10	1	S90-1-05-017	S90-1-05-017-B	S11	91105017	120/5	72,5	M12x1,5	T	17
	02.03 -	M12x1,5x25, KG60°	20	2	S90-2-10-004	S90-2-10-004-B	S10	91210004	120/5	72,5	M12x1,5	T	17
	02.03 -		24	2	S90-2-12-002	S90-2-12-002-B		91212002	120/5	72,5	M12x1,5	T	17
	02.03 -		30	2	S90-2-15-001	S90-2-15-001-B		91215001	120/5	72,5	M12x1,5	T	17
	02.03 -		40	2	S90-2-20-020	S90-2-20-020-B		91220020	120/5	72,5	M12x1,5	T	17
	02.03 -		40	7	S90-7-20-010	S90-7-20-010-B	S67	91720010	120/5	72,5	M12x1,5	T	17
	02.03 -		50	7	S90-7-25-011	S90-7-25-011-B		91725011	120/5	72,5	M12x1,5	T	17
	02.03 -		60	7	S90-7-30-002	S90-7-30-002-B		91730002	120/5	72,5	M12x1,5	T	17
Z4 (Z89)													
	05.09 -	S1-1-12-50-25-17	20	2	S90-2-10-004	S90-2-10-004-B	S10	91210004	120/5	72,5	M12x1,5	T	4
	05.09 -	M12x1,5x25, KG60°	24	2	S90-2-12-002	S90-2-12-002-B		91212002	120/5	72,5	M12x1,5	T	4
	05.09 -		30	2	S90-2-15-001	S90-2-15-001-B		91215001	120/5	72,5	M12x1,5	T	4
	05.09 -		40	2	S90-2-20-020	S90-2-20-020-B		91220020	120/5	72,5	M12x1,5	T	4
	05.09 -		40	7	S90-7-20-010	S90-7-20-010-B	S67	91720010	120/5	72,5	M12x1,5	T	4
	05.09 -		50	7	S90-7-25-011	S90-7-25-011-B		91725011	120/5	72,5	M12x1,5	T	4
	05.09 -		60	7	S90-7-30-002	S90-7-30-002-B		91730002	120/5	72,5	M12x1,5	T	4
Z4 Coupe (Z86)													
	03.06 -	S1-1-12-50-25-17	10	1	S90-1-05-017	S90-1-05-017-B	S11	91105017	120/5	72,5	M12x1,5	T	17
	03.06 -	M12x1,5x25, KG60°	20	2	S90-2-10-004	S90-2-10-004-B	S10	91210004	120/5	72,5	M12x1,5	T	17
	03.06 -		24	2	S90-2-12-002	S90-2-12-002-B		91212002	120/5	72,5	M12x1,5	T	17
	03.06 -		30	2	S90-2-15-001	S90-2-15-001-B		91215001	120/5	72,5	M12x1,5	T	17
	03.06 -		40	2	S90-2-20-020	S90-2-20-020-B		91220020	120/5	72,5	M12x1,5	T	17
	03.06 -		40	7	S90-7-20-010	S90-7-20-010-B	S67	91720010	120/5	72,5	M12x1,5	T	17
	03.06 -		50	7	S90-7-25-011	S90-7-25-011-B		91725011	120/5	72,5	M12x1,5	T	17
	03.06 -		60	7	S90-7-30-002	S90-7-30-002-B		91730002	120/5	72,5	M12x1,5	T	17
Z8 (E52)													
	06.00 - 06.03	S1-1-12-50-25-17	10	1	S90-1-05-017	S90-1-05-017-B		91105017	120/5	72,5	M12x1,5	§21	
	06.00 - 06.03	M12x1,5x25, KG60°	20	2	S90-2-10-004	S90-2-10-004-B	S10	91210004	120/5	72,5	M12x1,5	§21	
	06.00 - 06.03		30	2	S90-2-15-001	S90-2-15-001-B		91215001	120/5	72,5	M12x1,5	§21	
CHEVROLET													
BLAZER S10 Hinterachse													
BLAZER S10 rear axle	10.93 - 09.05		30	6	S90-6-15-055		S33, S60	91615055	120,65/5	70,5	M12x1,5	§21	
BLAZER S10 Vorderachse													
BLAZER S10 front axle	10.93 - 09.05		40	8	S90-8-20-001		S33, S60	91820001	120,65/5	70,5	M12x1,5	§21	
	10.93 - 09.05		50	8	S90-8-25-005		S9, S47, S60	91825005	120,65/5	70,5	M12x1,5	§21	
	10.93 - 09.05		60	8	S90-8-30-005		S9, S47, S60	91830005	120,65/5	70,5	M12x1,5	§21	

Modell | *Model*	Baujahr | *Year*	Original-radschraube (nicht bestellbar) | *Original Bolt (not available)*	Spurweiten-änd. Achse | *Total track widening* (mm)	Eibach System	Artikel-Nr. silber | *Part-No. silver*	Artikel-Nr. schwarz | *Part-No. black*	Hinweise | *Notes*	Kennzeichnung | *Stamping*	Lochkreis | - Anzahl | *Bolt pattern* | *No. of holes*	Zentrierung | *Centre bore* (mm)	Gewinde | *Thread*	Gutachten | *Homologation*	ET-Grenze | *Offset frontier*
CHEVROLET													
CAMARO													
	09.09 -		30	4	S90-4-15-027		S9	91415027	120/5	66,8	M14x1,5	§21	
	09.09 -		40	4	S90-4-20-035		S9	91420035	120/5	66,8	M14x1,5	§21	
	09.09 -		50	4	S90-4-25-051		S9	91425051	120/5	66,8	M14x1,5	§21	
	09.09 -		60	4	S90-4-30-044		S9	91430044	120/5	66,8	M14x1,5	§21	
CAMARO Cabrio													
CAMARO Convertible	12.92 - 12.02		30	6	S90-6-15-055		S33, S60	91615055	120,65/5	70,5	M12x1,5	§21	
CAMARO 92													
	12.92 - 12.02		30	6	S90-6-15-055		S33, S60	91615055	120,65/5	70,5	M12x1,5	§21	
CAPTIVA (C100, C140)													
	06.06 -		42	4	S90-4-21-002		S9, S47	91421002	115/5	70,1	M12x1,5	T	16
	06.06 -		50	4	S90-4-25-043		S9, S47	91425043	115/5	70,1	M12x1,5	T	16
CORVETTE (C6)													
	09.04 -		30	6	S90-6-15-033		S33, S60	91615033	120,65/5	70,1	M12x1,5	§21	
CORVETTE Cabrio (C6)													
CORVETTE Convertible (C6)	09.04 -		30	6	S90-6-15-033		S33, S60	91615033	120,65/5	70,1	M12x1,5	§21	
CRUZE (J300)													
	05.09 -		30	4	S90-4-15-028		S9	91415028	105/5	56,5	M12x1,5	T	9
	05.09 -		40	4	S90-4-20-036		S9	91420036	105/5	56,5	M12x1,5	T	9
	05.09 -		50	4	S90-4-25-052		S9	91425052	105/5	56,5	M12x1,5	T	9
	05.09 -		60	4	S90-4-30-045		S9	91430045	105/5	56,5	M12x1,5	T	9
CRUZE (J300)													
	05.09 -		32	4	S90-4-16-004		S9, S47	91416004	115/5	70,1	M12x1,5	T	9
	05.09 -		42	4	S90-4-21-002		S9	91421002	115/5	70,1	M12x1,5	T	9
	05.09 -		50	4	S90-4-25-043		S9	91425043	115/5	70,1	M12x1,5	T	9
CRUZE Schrägheck (J305)													
CRUZE Hatchback (J305)	06.11 -		30	4	S90-4-15-028		S9	91415028	105/5	56,5	M12x1,5	T	9
	06.11 -		40	4	S90-4-20-036		S9	91420036	105/5	56,5	M12x1,5	T	9
	06.11 -		50	4	S90-4-25-052		S9	91425052	105/5	56,5	M12x1,5	T	9
	06.11 -		60	4	S90-4-30-045		S9	91430045	105/5	56,5	M12x1,5	T	9
CRUZE Schrägheck (J305)													
CRUZE Hatchback (J305)	06.11 -		32	4	S90-4-16-004		S9, S47	91416004	115/5	70,1	M12x1,5	T	9
	06.11 -		42	4	S90-4-21-002		S9	91421002	115/5	70,1	M12x1,5	T	9
	06.11 -		50	4	S90-4-25-043		S9	91425043	115/5	70,1	M12x1,5	T	9
CRUZE Station Wagon (J308)													
	08.12 -		30	4	S90-4-15-028		S9	91415028	105/5	56,5	M12x1,5	T	9
	08.12 -		40	4	S90-4-20-036		S9	91420036	105/5	56,5	M12x1,5	T	9
	08.12 -		50	4	S90-4-25-052		S9	91425052	105/5	56,5	M12x1,5	T	9
	08.12 -		60	4	S90-4-30-045		S9	91430045	105/5	56,5	M12x1,5	T	9
CRUZE Station Wagon (J308)													
	08.12 -		32	4	S90-4-16-004		S9, S47	91416004	115/5	70,1	M12x1,5		
	08.12 -		42	4	S90-4-21-002		S9	91421002	115/5	70,1	M12x1,5		
	08.12 -		50	4	S90-4-25-043		S9	91425043	115/5	70,1	M12x1,5		
TRAX													
	12.12 -		30	4	S90-4-15-028		S9	91415028	105/5	56,5	M12x1,5	T	8
	12.12 -		40	4	S90-4-20-036		S9	91420036	105/5	56,5	M12x1,5	T	8
	12.12 -		50	4	S90-4-25-052		S9	91425052	105/5	56,5	M12x1,5	T	8
	12.12 -		60	4	S90-4-30-045		S9	91430045	105/5	56,5	M12x1,5	T	8
CHRYSLER													
300 C (LX)													
	09.04 -		50	4	S90-4-25-030		S23, S33, S37	91425030	115/5	71,4	M14x1,5	T	-6
	09.04 -		60	4	S90-4-30-017		S23, S33, S37	91430017	115/5	71,4	M14x1,5	T	-6
300 C Touring (LX)													
300 C Station Wagon (LX)	09.04 - 12.10		50	4	S90-4-25-030		S23, S33, S37	91425030	115/5	71,4	M14x1,5	T	-6
	09.04 - 12.10		60	4	S90-4-30-017		S23, S33, S37	91430017	115/5	71,4	M14x1,5	T	-6
CROSSFIRE													
	07.03 - 12.08	S1-5-12-50-39-17	10	1	S90-1-05-014		S6, S11	91105014	112/5	66,45	M12x1,5	T	7
	07.03 - 12.08	M12x1,5x39, KU r=12	20	2	S90-2-10-002	S90-2-10-002-B	S6	91210002	112/5	66,45	M12x1,5	T	7
	07.03 - 12.08		30	2	S90-2-15-017	S90-2-15-017-B	S6	91215017	112/5	66,45	M12x1,5	T	7
	07.03 - 12.08		40	2	S90-2-20-007	S90-2-20-007-B	S6	91220007	112/5	66,45	M12x1,5	T	7
	07.03 - 12.08		40	7	S90-7-20-018		S6	91720018	112/5	66,45	M12x1,5	T	7
	07.03 - 12.08		50	7	S90-7-25-009		S6	91725009	112/5	66,45	M12x1,5	T	7
	07.03 - 12.08		60	7	S90-7-30-001		S6	91730001	112/5	66,45	M12x1,5	T	7
CROSSFIRE Roadster													
	05.04 - 12.08	S1-5-12-50-39-17	10	1	S90-1-05-014		S6, S11	91105014	112/5	66,45	M12x1,5	T	7
	05.04 - 12.08	M12x1,5x39, KU r=12	20	2	S90-2-10-002	S90-2-10-002-B	S6	91210002	112/5	66,45	M12x1,5	T	7
	05.04 - 12.08		30	2	S90-2-15-017	S90-2-15-017-B	S6	91215017	112/5	66,45	M12x1,5	T	7
	05.04 - 12.08		40	2	S90-2-20-007	S90-2-20-007-B	S6	91220007	112/5	66,45	M12x1,5	T	7
	05.04 - 12.08		40	7	S90-7-20-018		S6	91720018	112/5	66,45	M12x1,5	T	7
	05.04 - 12.08		50	7	S90-7-25-009		S6	91725009	112/5	66,45	M12x1,5	T	7
	05.04 - 12.08		60	7	S90-7-30-001		S6	91730001	112/5	66,45	M12x1,5	T	7
NEON II (PL) Hinterachse													
NEON II (PL) rear axle	08.99 - 12.06		20	6	S90-6-10-007		S30, S33	91610001	100/5	57	M12x1,5	§21	
NEON II (PL) Vorderachse													
NEON II (PL) front axle	08.99 - 12.06		20	6	S90-6-10-006		S30, S33	91610001	100/5	57	M12x1,5	§21	
PT CRUISER (PT_) Hinterachse													
PT CRUISER (PT_) rear axle	06.00 - 12.10		10	5	S90-5-05-033		S11, S30, S33	91505025	100/5	57	M12x1,5	T	6,5
	06.00 - 12.10		20	6	S90-6-10-007		S30, S33	91610001	100/5	57	M12x1,5	T	6,5
PT CRUISER (PT_) Vorderachse													
PT CRUISER (PT_) front axle	06.00 - 12.10		10	5	S90-5-05-032		S11, S30, S33	91505025	100/5	57	M12x1,5	T	6,5
	06.00 - 12.10		20	6	S90-6-10-006		S30, S33	91610001	100/5	57	M12x1,5	T	6,5
PT CRUISER Cabriolet Hinterachse													
PT CRUISER Convertible rear axle	06.00 - 12.10		10	5	S90-5-05-033		S11, S30, S33	91505025	100/5	57	M12x1,5	T	6,5
	06.00 - 12.10		20	6	S90-6-10-007		S30, S33	91610001	100/5	57	M12x1,5	T	6,5
PT CRUISER Cabriolet Vorderachse													
PT CRUISER Convertible front axle	06.00 - 12.10		10	5	S90-5-05-032		S11, S30, S33	91505025	100/5	57	M12x1,5	T	6,5
	06.00 - 12.10		20	6	S90-6-10-006		S30, S33	91610001	100/5	57	M12x1,5	T	6,5

Modell | *Model*	Baujahr | *Year*	Original-radschraube (nicht bestellbar) | *Original Bolt (not available)*	Spurweiten-änd. Achse | *Total track widening* (mm)	Eibach System	Artikel-Nr. silber | *Part-No. silver*	Artikel-Nr. schwarz | *Part-No. black*	Hinweise | *Notes*	Kennzeichnung | *Stamping*	Lochkreis | - Anzahl | *Bolt pattern* | *No. of holes*	Zentrierung | *Centre bore* (mm)	Gewinde | *Thread*	Gutachten | *Homologation*	ET-Grenze | *Offset frontier*
CHRYSLER													
SEBRING Cabriolet (JR)													
SEBRING Convertible (JR)	04.01 - 06.07		20	6	S90-6-10-006		S30, S33	91610001	100/5	57	M12x1,5	T	26
VOYAGER IV (RG, RS) Hinterachse													
VOYAGER IV (RG, RS) rear axle	09.99 - 12.08		10	5	S90-5-05-035		S33	91505026	114,3/5	71,5	M12x1,5	T	25
	09.99 - 12.08		30	6	S90-6-15-031		S33	91615022	114,3/5	71,5	M12x1,5	T	25
	09.99 - 12.08		50	4	S90-4-25-012		S9, S23	91425012	114,3/5	71,5	M12x1,5	T	25
VOYAGER IV (RG, RS) Vorderachse													
VOYAGER IV (RG, RS) front axle	09.99 - 12.08		10	5	S90-5-05-034		S33	91505026	114,3/5	71,5	M12x1,5	T	25
	09.99 - 12.08		30	6	S90-6-15-030		S33	91615022	114,3/5	71,5	M12x1,5	T	25
	09.99 - 12.08		50	4	S90-4-25-012		S9, S23	91425012	114,3/5	71,5	M12x1,5	T	25
CITROËN													
C-CROSSER (EP_)													
	02.07 -		30	4	S90-4-15-018		S9	91415002	114,3/5	67	M12x1,5	T	8
	02.07 -		40	4	S90-4-20-024		S9	91420001	114,3/5	67	M12x1,5	T	8
	02.07 -		50	4	S90-4-25-041		S9	91425016	114,3/5	67	M12x1,5	T	8
	02.07 -		60	4	S90-4-30-032		S9	91430015	114,3/5	67	M12x1,5	T	8
C-CROSSER ENTERPRISE													
	01.09 -		30	4	S90-4-15-018		S9	91415002	114,3/5	67	M12x1,5	T	8
	01.09 -		40	4	S90-4-20-024		S9	91420001	114,3/5	67	M12x1,5	T	8
	01.09 -		50	4	S90-4-25-041		S9	91425016	114,3/5	67	M12x1,5	T	8
	01.09 -		60	4	S90-4-30-032		S9	91430015	114,3/5	67	M12x1,5	T	8
C1 (PM_, PN_)													
	06.05 -	S1-1-12-50-20-17	20	2	S90-2-10-017		S58	91210017	100/4	54	M12x1,5	T	24
	06.05 -	M12x1,5x20, KG60°	30	2	S90-2-15-035		S58	91615010	100/4	54	M12x1,5	T	24
	06.05 -		40	2	S90-2-20-023		S58	91620026	100/4	54	M12x1,5	T	24
	06.05 -		50	7	S90-7-25-026			91725026	100/4	54	M12x1,5	T	24
C1 II													
	04.14 -	S1-9-12-50-33-17	20	2	S90-2-10-017		S58	91210017	100/4	54	M12x1,5		
	04.14 -	M12x1,5x33, FB	30	2	S90-2-15-035		S58	91615010	100/4	54	M12x1,5		
	04.14 -		40	2	S90-2-20-023		S58	91620026	100/4	54	M12x1,5		
	04.14 -		50	7	S90-7-25-026			91725026	100/4	54	M12x1,5		
C2 (JM_)													
	09.03 -	S1-9-12-25-36-17	10	1	S90-1-05-012		S11, S58	91105012	108/4	65	M12x1,25	§21	
	09.03 -	M12x1,25x36, FB	20	2	S90-2-10-013		S58	91210013	108/4	65	M12x1,25	§21	
	09.03 -		30	2	S90-2-15-008		S58	91215008	108/4	65	M12x1,25	§21	
	09.03 -		40	2	S90-2-20-021		S58	91220021	108/4	65	M12x1,25	§21	
	09.03 -		50	7	S90-7-25-019			91725019	108/4	65	M12x1,25	§21	
	09.03 -		60	7	S90-7-30-009			91730009	108/4	65	M12x1,25	§21	
C2 Enterprise													
	04.09 -	S1-9-12-25-36-17	10	1	S90-1-05-012		S11, S58	91105012	108/4	65	M12x1,25	§21	
	04.09 -	M12x1,25x36, FB	20	2	S90-2-10-013		S58	91210013	108/4	65	M12x1,25	§21	
	04.09 -		30	2	S90-2-15-008		S58	91215008	108/4	65	M12x1,25	§21	
	04.09 -		40	2	S90-2-20-021		S58	91220021	108/4	65	M12x1,25	§21	
	04.09 -		50	7	S90-7-25-019			91725019	108/4	65	M12x1,25	§21	
	04.09 -		60	7	S90-7-30-009			91730009	108/4	65	M12x1,25	§21	
C3 I (FC_)													
	02.02 -	S1-9-12-25-36-17	10	1	S90-1-05-012		S11, S58	91105012	108/4	65	M12x1,25	T	9
	02.02 -	M12x1,25x36, FB	20	2	S90-2-10-013		S58	91210013	108/4	65	M12x1,25	§21	9
	02.02 -		30	2	S90-2-15-008		S58	91215008	108/4	65	M12x1,25	T	9
	02.02 -		40	2	S90-2-20-021		S58	91220021	108/4	65	M12x1,25	§21	9
	02.02 -		50	7	S90-7-25-019			91725019	108/4	65	M12x1,25	§21	9
	02.02 -		60	7	S90-7-30-009			91730009	108/4	65	M12x1,25	§21	9
C3 Pluriel (HB_)													
	05.03 -	S1-9-12-25-36-17	10	1	S90-1-05-012		S11, S58	91105012	108/4	65	M12x1,25	T	12
	05.03 -	M12x1,25x36, FB	20	2	S90-2-10-013		S58	91210013	108/4	65	M12x1,25	§21	12
	05.03 -		30	2	S90-2-15-008		S58	91215008	108/4	65	M12x1,25	T	12
	05.03 -		40	2	S90-2-20-021		S58	91220021	108/4	65	M12x1,25	§21	12
	05.03 -		50	7	S90-7-25-019			91725019	108/4	65	M12x1,25	§21	12
	05.03 -		60	7	S90-7-30-009			91730009	108/4	65	M12x1,25	§21	12
C4 I (LC_)													
	11.04 - 07.11	S1-9-12-25-36-17	20	2	S90-2-10-013		S58	91210013	108/4	65	M12x1,25	T	-3
	11.04 - 07.11	M12x1,25x36, FB	30	2	S90-2-15-008		S58	91215008	108/4	65	M12x1,25	T	-3
	11.04 - 07.11		40	2	S90-2-20-021		S58	91220021	108/4	65	M12x1,25	T	-3
	11.04 - 07.11		50	7	S90-7-25-019			91725019	108/4	65	M12x1,25	T	-3
	11.04 - 07.11		60	7	S90-7-30-009			91730009	108/4	65	M12x1,25	T	-3
C4 II (B7)													
	11.09 -	S1-9-12-25-36-17	20	2	S90-2-10-013		S58	91210013	108/4	65	M12x1,25	T	-3
	11.09 -	M12x1,25x36, FB	30	2	S90-2-15-008		S58	91215008	108/4	65	M12x1,25	T	-3
	11.09 -		40	2	S90-2-20-021		S58	91220021	108/4	65	M12x1,25	T	-3
	11.09 -		50	7	S90-7-25-019			91725019	108/4	65	M12x1,25	T	-3
	11.09 -		60	7	S90-7-30-009			91730009	108/4	65	M12x1,25	T	-3
C4 Coupe (LA_)													
	11.04 - 07.11	S1-9-12-25-36-17	20	2	S90-2-10-013		S58	91210013	108/4	65	M12x1,25	T	-3
	11.04 - 07.11	M12x1,25x36, FB	30	2	S90-2-15-008		S58	91215008	108/4	65	M12x1,25	T	-3
	11.04 - 07.11		40	2	S90-2-20-021		S58	91220021	108/4	65	M12x1,25	T	-3
	11.04 - 07.11		50	7	S90-7-25-019			91725019	108/4	65	M12x1,25	T	-3
	11.04 - 07.11		60	7	S90-7-30-009			91730009	108/4	65	M12x1,25	T	-3
C4 Stufenheck													
C4 Saloon	07.06 -	S1-9-12-25-36-17	20	2	S90-2-10-013		S58	91210013	108/4	65	M12x1,25	T	-3
	07.06 -	M12x1,25x36, FB	30	2	S90-2-15-008		S58	91215008	108/4	65	M12x1,25	T	-3
	07.06 -		40	2	S90-2-20-021		S58	91220021	108/4	65	M12x1,25	T	-3
	07.06 -		50	7	S90-7-25-019			91725019	108/4	65	M12x1,25	T	-3
	07.06 -		60	7	S90-7-30-009			91730009	108/4	65	M12x1,25	T	-3
C5 III (RD_)													
	02.08 -	S1-9-12-25-36-17	20	2	S90-2-10-012		S58	91210012	108/5	65	M12x1,25	§21	
	02.08 -	M12x1,25x36, FB	30	2	S90-2-15-016		S58	91215016	108/5	65	M12x1,25	§21	
	02.08 -		40	2	S90-2-20-022		S58	91220022	108/5	65	M12x1,25	§21	
	02.08 -		42	7	S90-7-21-003			91721003	108/5	65	M12x1,25	§21	
DS3													
	11.09 -	S1-9-12-25-36-17	10	1	S90-1-05-012		S11, S58	91105012	108/4	65	M12x1,25	T	-3
	11.09 -	M12x1,25x36, FB	20	2	S90-2-10-013		S58	91210013	108/4	65	M12x1,25	T	-3
	11.09 -		30	2	S90-2-15-008		S58	91215008	108/4	65	M12x1,25	T	-3
	11.09 -		40	2	S90-2-20-021		S58	91220021	108/4	65	M12x1,25	T	-3
	11.09 -		50	7	S90-7-25-019			91725019	108/4	65	M12x1,25	T	-3
	11.09 -		60	7	S90-7-30-009			91730009	108/4	65	M12x1,25	T	-3

Modell | *Model*	Baujahr | *Year*	Original-radschraube (nicht bestellbar) | *Original Bolt (not available)*	Spurweiten-änd. Achse | *Total track widening* (mm)	Eibach System	Artikel-Nr. silber | *Part-No. silver*	Artikel-Nr. schwarz | *Part-No. black*	Hinweise | *Notes*	Kennzeichnung | *Stamping*	Lochkreis | - Anzahl | *Bolt pattern* | *No. of holes*	Zentrierung | *Centre bore* (mm)	Gewinde | *Thread*	Gutachten | *Homologation*	ET-Grenze | *Offset frontier*
CITROËN													
DS3 Cabriolet													
DS3 Convertible	01.13 -	S1-9-12-25-36-17	10	1	S90-1-05-012		S11, S58	91105012	108/4	65	M12x1,25	T	-3
	01.13 -	M12x1,25x36, FB	20	2	S90-2-10-013		S58	91210013	108/4	65	M12x1,25	T	-3
	01.13 -		30	2	S90-2-15-008		S58	91215008	108/4	65	M12x1,25	T	-3
	01.13 -		40	2	S90-2-20-021		S58	91220021	108/4	65	M12x1,25	T	-3
	01.13 -		50	7	S90-7-25-019			91725019	108/4	65	M12x1,25	T	-3
	01.13 -		60	7	S90-7-30-009			91730009	108/4	65	M12x1,25	T	-3
DS4													
	04.11 -	S1-9-12-25-37-17	10	1	S90-1-05-012		S58	91105012	108/4	65	M12x1,25	§21	-1
	04.11 -	M12x1,25x37, FB	20	2	S90-2-10-013		S58	91210013	108/4	65	M12x1,25	§21	-1
	04.11 -		30	2	S90-2-15-008		S58	91215008	108/4	65	M12x1,25	§21	-1
	04.11 -		40	2	S90-2-20-021			91220021	108/4	65	M12x1,25	§21	-1
	04.11 -		50	7	S90-7-25-019			91725019	108/4	65	M12x1,25	§21	-1
	04.11 -		60	7	S90-7-30-009			91730009	108/4	65	M12x1,25	§21	-1
SAXO (S0, S1)													
	02.96 - 04.04	S1-1-12-25-32-19	10	1	S90-1-05-012		S58	91105012	108/4	65	M12x1,25	T	5
	02.96 - 04.04	M12x1,25x32, KG60°	30	2	S90-2-15-008		S58	91215008	108/4	65	M12x1,25	T	5
XSARA PICASSO (N68)													
	12.99 -	S1-1-12-25-24-19	10	1	S90-1-05-012		S6, S58	91105012	108/4	65	M12x1,25	§21	
	12.99 -	M12x1,25x24, KG60°	20	2	S90-2-10-013		S58	91210013	108/4	65	M12x1,25	§21	
	12.99 -		30	2	S90-2-15-008		S58	91215008	108/4	65	M12x1,25	§21	
	12.99 -		40	2	S90-2-20-021		S58	91220021	108/4	65	M12x1,25	§21	
	12.99 -		50	7	S90-7-25-019			91725019	108/4	65	M12x1,25	§21	
	12.99 -		60	7	S90-7-30-009			91730009	108/4	65	M12x1,25	§21	
DACIA													
DUSTER													
	04.10 -	S4-1-12-50-26-17	10	1	S90-1-05-032			91105032	114,3/5	66	M12x1,5	T	20
	04.10 -	M12x1,5x26, KG60°	32	2	S90-2-16-011	S90-2-16-011-B		91216011	114,3/5	66	M12x1,5	T	20
	04.10 -		40	2	S90-2-20-032			91220032	114,3/5	66	M12x1,5	T	20
	04.10 -		42	7	S90-7-21-012			91721010	114,3/5	66	M12x1,5	T	20
	04.10 -		50	7	S90-7-25-047			91725044	114,3/5	66	M12x1,5	T	20
	04.10 -		60	7	S90-7-30-055			91730052	114,3/5	66	M12x1,5	T	20
LOGAN (LS_)													
	09.04 -	S1-1-12-50-22-19	10	1	S90-1-05-003		S11	91105003	100/4	60	M12x1,5	§21	
	09.04 -	M12x1,5x22, KG60°	30	2	S90-2-15-014			91215014	100/4	60	M12x1,5	§21	
	09.04 -		40	2	S90-2-20-010			91220010	100/4	60	M12x1,5	§21	
	09.04 -		50	7	S90-7-25-007			91725007	100/4	60	M12x1,5	§21	
LOGAN Express (FS_)													
	03.09 -	S1-1-12-50-22-19	10	1	S90-1-05-003		S11	91105003	100/4	60	M12x1,5	§21	
	03.09 -	M12x1,5x22, KG60°	30	2	S90-2-15-014			91215014	100/4	60	M12x1,5	§21	
	03.09 -		40	2	S90-2-20-010			91220010	100/4	60	M12x1,5	§21	
	03.09 -		50	7	S90-7-25-007			91725007	100/4	60	M12x1,5	§21	
LOGAN MCV (KS_)													
	02.07 -	S1-1-12-50-22-19	10	1	S90-1-05-003		S11	91105003	100/4	60	M12x1,5	§21	
	02.07 -	M12x1,5x22, KG60°	30	2	S90-2-15-014			91215014	100/4	60	M12x1,5	§21	
	02.07 -		40	2	S90-2-20-010			91220010	100/4	60	M12x1,5	§21	
	02.07 -		50	7	S90-7-25-007			91725007	100/4	60	M12x1,5	§21	
LOGAN Pick-up (US_)													
	03.08 -	S1-1-12-50-22-19	10	1	S90-1-05-003		S11	91105003	100/4	60	M12x1,5	§21	
	03.08 -	M12x1,5x22, KG60°	30	2	S90-2-15-014			91215014	100/4	60	M12x1,5	§21	
	03.08 -		40	2	S90-2-20-010			91220010	100/4	60	M12x1,5	§21	
	03.08 -		50	7	S90-7-25-007			91725007	100/4	60	M12x1,5	§21	
DAIHATSU													
MATERIA (M4_)													
	10.06 -		30	6	S90-6-15-041		S33	91615010	100/4	54	M12x1,5	§21	
	10.06 -		40	4	S90-4-20-011			91420011	100/4	54	M12x1,5	§21	
	10.06 -		40	6	S90-6-20-032		S33	91620026	100/4	54	M12x1,5	§21	
	10.06 -		60	4	S90-4-30-021			91430021	100/4	54	M12x1,5	§21	
SIRION (M1)													
	04.98 - 04.05		30	6	S90-6-15-010		S33	91615010	100/4	54	M12x1,5	§21	
	04.98 - 04.05		40	4	S90-4-20-011		S37	91420011	100/4	54	M12x1,5	§21	
SIRION (M3_)													
	01.05 -		30	6	S90-6-15-041		S33	91615010	100/4	54	M12x1,5	T	5
	01.05 -		40	4	S90-4-20-011			91420011	100/4	54	M12x1,5	T	5
	01.05 -		40	6	S90-6-20-032		S33	91620026	100/4	54	M12x1,5	T	5
	01.05 -		60	4	S90-4-30-021			91430021	100/4	54	M12x1,5	T	5
TREVIS													
	06.06 -		30	6	S90-6-15-041		S33	91615010	100/4	54	M12x1,5	§21	
	06.06 -		40	4	S90-4-20-011			91420011	100/4	54	M12x1,5	§21	
	06.06 -		40	6	S90-6-20-032		S33	91620026	100/4	54	M12x1,5	§21	
	06.06 -		60	4	S90-4-30-021			91430021	100/4	54	M12x1,5	§21	
DODGE													
CALIBER													
	06.06 -		20	6	S90-6-10-002		S33	91610002	114,3/5	67	M12x1,5	T	14
	06.06 -		30	4	S90-4-15-018		S9, S23	91415002	114,3/5	67	M12x1,5	T	14
	06.06 -		30	6	S90-6-15-023		S33	91615023	114,3/5	67	M12x1,5	T	14
	06.06 -		40	4	S90-4-20-024		S9, S23	91420001	114,3/5	67	M12x1,5	T	14
	06.06 -		40	6	S90-6-20-035		S33	91620028	114,3/5	67	M12x1,5	T	14
	06.06 -		50	4	S90-4-25-041		S9, S23	91425016	114,3/5	67	M12x1,5	T	14
	06.06 -		60	4	S90-4-30-032		S9	91430015	114,3/5	67	M12x1,5	T	14
Magnum													
	11.04 -		50	4	S90-4-25-030		S33	91425030	115/5	71,4	M14x1,5	T	-6
	11.04 -		60	4	S90-4-30-017		S33	91430017	115/5	71,4	M14x1,5	T	-6
NITRO (KJ)													
	09.06 - 12.12		50	4	S90-4-25-015		S9, S23, S62	91425015	114,3/5	71,5	1/2"UNF	T	10,5
	09.06 - 12.12		60	4	S90-4-30-008		S9, S62	91430008	114,3/5	71,5	1/2"UNF	T	10,5
FIAT													
500 (312)													
	10.07 -	S1-1-12-25-22-17	10	1	S90-1-05-011			91105011	98/4	58	M12x1,25	T	5
	10.07 -	M12x1,25x22, KG60°	20	2	S90-2-10-021		S75	91210021	98/4	58	M12x1,25	T	5
	10.07 -		30	2	S90-2-15-020			91215020	98/4	58	M12x1,25	T	5
	10.07 -		40	7	S90-7-20-012			91720012	98/4	58	M12x1,25	T	5
	10.07 -		50	7	S90-7-25-006			91725006	98/4	58	M12x1,25	T	5
	10.07 -		60	7	S90-7-30-005			91730005	98/4	58	M12x1,25	T	5

Modell | *Model*	Baujahr | *Year*	Original-radschraube (nicht bestellbar) | *Original Bolt (not available)*	Spurweiten-änd. Achse | *Total track widening* (mm)	Eibach System	Artikel-Nr. silber | *Part-No. silver*	Artikel-Nr. schwarz | *Part-No. black*	Hinweise | *Notes*	Kennzeichnung | *Stamping*	Lochkreis | - Anzahl | *Bolt pattern* | *No. of holes*	Zentrierung | *Centre bore* (mm)	Gewinde | *Thread*	Gutachten | *Homologation*	ET-Grenze | *Offset frontier*
FIAT													
500 C (312)													
	09.09 -	S1-1-12-25-22-17	10	1	S90-1-05-011			91105011	98/4	58	M12x1,25	T	5
	09.09 -	M12x1,25x22, KG60°	20	2	S90-2-10-021		S75	91210021	98/4	58	M12x1,25	T	5
	09.09 -		30	2	S90-2-15-020			91215020	98/4	58	M12x1,25	T	5
	09.09 -		40	7	S90-7-20-012			91720012	98/4	58	M12x1,25	T	5
	09.09 -		50	7	S90-7-25-006			91725006	98/4	58	M12x1,25	T	5
	09.09 -		60	7	S90-7-30-005			91730005	98/4	58	M12x1,25	T	5
500L													
	09.12 -	S1-1-12-25-22-17	10	1	S90-1-05-015			91105015	98/5	58	M12x1,25	T	9
	09.12 -	M12x1,25x22, KG60°	20	2	S90-2-10-003		S75	91210003	98/5	58	M12x1,25	T	9
	09.12 -		30	2	S90-2-15-003			91215003	98/5	58	M12x1,25	T	9
	09.12 -		40	7	S90-7-20-039			91720019	98/5	58	M12x1,25	T	9
	09.12 -		50	7	S90-7-25-051			91725022	98/5	58	M12x1,25	T	9
500X													
	09.14 -	S1-1-12-25-22-17	30	2	S90-2-15-007			91215007	110/5	65	M12x1,25	T	10
	09.14 -	M12x1,25x22, KG60°	32	2	S90-2-16-001			91216001	110/5	65	M12x1,25	T	10
	09.14 -		40	2	S90-2-20-006			91220006	110/5	65	M12x1,25	T	10
	09.14 -		40	7	S90-7-20-034			91720034	110/5	65	M12x1,25	T	10
	09.14 -		50	7	S90-7-25-046			91725046	110/5	65	M12x1,25	T	10
	09.14 -		60	7	S90-7-30-054			91730054	110/5	65	M12x1,25	T	10
BARCHETTA (183)													
	03.95 - 05.05	S1-1-12-25-32-19	10	1	S90-1-05-011			91105011	98/4	58	M12x1,25	§21	
	03.95 - 05.05	M12x1,25x32, KG60°	30	2	S90-2-15-020			91215020	98/4	58	M12x1,25	§21	
	03.95 - 05.05		50	7	S90-7-25-006			91725006	98/4	58	M12x1,25	§21	
BRAVA (182)													
	10.95 - 06.03	S1-1-12-25-32-19	10	1	S90-1-05-011			91105011	98/4	58	M12x1,25	T	17
	10.95 - 06.03	M12x1,25x32, KG60°	30	2	S90-2-15-020			91215020	98/4	58	M12x1,25	T	17
	10.95 - 06.03		50	7	S90-7-25-006			91725006	98/4	58	M12x1,25	T	17
BRAVO I (182)													
	10.95 - 10.01	S1-1-12-25-32-19	10	1	S90-1-05-011			91105011	98/4	58	M12x1,25	T	17
	10.95 - 10.01	M12x1,25x32, KG60°	30	2	S90-2-15-020			91215020	98/4	58	M12x1,25	T	17
	10.95 - 10.01		50	7	S90-7-25-006			91725006	98/4	58	M12x1,25	T	17
BRAVO II (198)													
	11.06 -	S1-1-12-25-22-17	10	1	S90-1-05-011		S11	91105011	98/4	58	M12x1,25	T	1,5
	11.06 -	M12x1,25x22, KG60°	30	2	S90-2-15-020			91215020	98/4	58	M12x1,25	T	1,5
	11.06 -		40	7	S90-7-20-012			91720012	98/4	58	M12x1,25	T	1,5
	11.06 -		50	7	S90-7-25-006			91725006	98/4	58	M12x1,25	T	1,5
	11.06 -		60	7	S90-7-30-005			91730005	98/4	58	M12x1,25	T	1,5
CINQUECENTO (170)													
	07.91 - 07.99	S1-1-12-25-32-19	10	1	S90-1-05-011			91105011	98/4	58	M12x1,25	T	11
	07.91 - 07.99	M12x1,25x32, KG60°	30	2	S90-2-15-020			91215020	98/4	58	M12x1,25	T	11
	07.91 - 07.99		50	7	S90-7-25-006			91725006	98/4	58	M12x1,25	T	11
COUPE (FA/175)													
	11.93 - 08.00		10	1	S90-1-05-011			91105011	98/4	58	M12x1,25	§21	
	11.93 - 08.00		30	2	S90-2-15-020			91215020	98/4	58	M12x1,25	§21	
	11.93 - 08.00		50	7	S90-7-25-006			91725006	98/4	58	M12x1,25	§21	
CROMA (194)													
	06.05 -	S1-1-12-50-22-17	10	1	S90-1-05-013			91105013	110/5	65	M12x1,5	§21	
	06.05 -	M12x1,5x22, KG60°	32	2	S90-2-16-001			91216001	110/5	65	M12x1,5	§21	
	06.05 -		40	2	S90-2-20-006			91220006	110/5	65	M12x1,5	§21	
PANDA (141A)													
	03.80 - 07.04	S1-1-12-25-32-19	10	1	S90-1-05-011			91105011	98/4	58	M12x1,25	§21	
	03.80 - 07.04	M12x1,25x32, KG60°	30	2	S90-2-15-020			91215020	98/4	58	M12x1,25	§21	
	03.80 - 07.04		50	7	S90-7-25-006			91725006	98/4	58	M12x1,25	§21	
PANDA (169)													
	09.03 -	S1-1-12-25-22-17	10	1	S90-1-05-011		S6	91105011	98/4	58	M12x1,25	T	20
	09.03 -	M12x1,25x22, KG60°	30	2	S90-2-15-020			91215020	98/4	58	M12x1,25	T	20
	09.03 -		50	7	S90-7-25-006			91725006	98/4	58	M12x1,25	T	20
PANDA (312)													
	02.12 -	S1-1-12-25-22-17	10	1	S90-1-05-011			91105011	98/4	58	M12x1,25	T	5
	02.12 -	M12x1,25x22, KG60°	30	2	S90-2-15-020			91215020	98/4	58	M12x1,25	T	5
	02.12 -		40	7	S90-7-20-012			91720012	98/4	58	M12x1,25	T	5
	02.12 -		50	7	S90-7-25-006			91725006	98/4	58	M12x1,25	T	5
	02.12 -		60	7	S90-7-30-005			91730005	98/4	58	M12x1,25	T	5
PANDA Van (141_)													
	01.86 - 02.04	S1-1-12-25-32-19	10	1	S90-1-05-011			91105011	98/4	58	M12x1,25	§21	
	01.86 - 02.04	M12x1,25x32, KG60°	30	2	S90-2-15-020			91215020	98/4	58	M12x1,25	§21	
	01.86 - 02.04		50	7	S90-7-25-006			91725006	98/4	58	M12x1,25	§21	
PANDA Van (169)													
	03.04 -	S1-1-12-25-22-17	10	1	S90-1-05-011		S6	91105011	98/4	58	M12x1,25	T	20
	03.04 -	M12x1,25x22, KG60°	30	2	S90-2-15-020			91215020	98/4	58	M12x1,25	T	20
	03.04 -		50	7	S90-7-25-006			91725006	98/4	58	M12x1,25	T	20
PUNTO (176)													
	09.93 - 09.99	S1-1-12-25-32-19	10	1	S90-1-05-011			91105011	98/4	58	M12x1,25	T	20
	09.93 - 09.99	M12x1,25x32, KG60°	30	2	S90-2-15-020			91215020	98/4	58	M12x1,25	T	20
	09.93 - 09.99		50	7	S90-7-25-006			91725006	98/4	58	M12x1,25	T	20
PUNTO (188)													
	09.99 -	S1-1-12-25-32-19	10	1	S90-1-05-011			91105011	98/4	58	M12x1,25	T	18
	09.99 -	M12x1,25x32, KG60°	30	2	S90-2-15-020			91215020	98/4	58	M12x1,25	T	18
	09.99 -		50	7	S90-7-25-006			91725006	98/4	58	M12x1,25	T	18
PUNTO (199)													
	03.12 -	S1-1-12-50-22-17	24	2	S90-2-12-006		S3	91212006	100/4	56,5	M12x1,5	T	13
	03.12 -	M12x1,5x22, KG60°	32	2	S90-2-16-004		S3	91216004	100/4	56,5	M12x1,5	T	13
	03.12 -		40	2	S90-2-20-002			91220002	100/4	56,5	M12x1,5	T	13
	03.12 -		50	7	S90-7-25-002			91725002	100/4	56,5	M12x1,5	T	13
PUNTO / GRANDE PUNTO (199)													
	10.05 -	S1-1-12-50-22-17	24	2	S90-2-12-006		S3	91212006	100/4	56,5	M12x1,5	T	13
	10.05 -	M12x1,5x22, KG60°	32	2	S90-2-16-004		S3	91216004	100/4	56,5	M12x1,5	T	13
	10.05 -		40	2	S90-2-20-002			91220002	100/4	56,5	M12x1,5	T	13
	10.05 -		50	7	S90-7-25-002			91725002	100/4	56,5	M12x1,5	T	13
PUNTO Cabriolet (176C)													
PUNTO Convertible (176C)	04.94 - 06.00	S1-1-12-25-32-19	10	1	S90-1-05-011			91105011	98/4	58	M12x1,25	T	20
	04.94 - 06.00	M12x1,25x32, KG60°	30	2	S90-2-15-020			91215020	98/4	58	M12x1,25	T	20
	04.94 - 06.00		50	7	S90-7-25-006			91725006	98/4	58	M12x1,25	T	20
PUNTO EVO (199)													
	07.08 - 03.12	S1-1-12-50-22-17	24	2	S90-2-12-006		S3	91212006	100/4	56,5	M12x1,5	T	13
	07.08 - 03.12	M12x1,5x22, KG60°	32	2	S90-2-16-004		S3	91216004	100/4	56,5	M12x1,5	T	13
	07.08 - 03.12		40	2	S90-2-20-002			91220002	100/4	56,5	M12x1,5	T	13
	07.08 - 03.12		50	7	S90-7-25-002			91725002	100/4	56,5	M12x1,5	T	13

Modell | *Model*	Baujahr | *Year*	Original-radschraube (nicht bestellbar) | *Original Bolt (not available)*	Spurweiten-änd. Achse | *Total track widening* (mm)	Eibach System	Artikel-Nr. silber | *Part-No. silver*	Artikel-Nr. schwarz | *Part-No. black*	Hinweise | *Notes*	Kennzeichnung | *Stamping*	Lochkreis | - Anzahl | *Bolt pattern* | *No. of holes*	Zentrierung | *Centre bore* (mm)	Gewinde | *Thread*	Gutachten | *Homologation*	ET-Grenze | *Offset frontier*
FIAT													
PUNTO Van (176L)													
	04.96 - 02.00	S1-1-12-25-32-19	10	1	S90-1-05-011			91105011	98/4	58	M12x1,25	T	20
	04.96 - 02.00	M12x1,25x32, KG60°	30	2	S90-2-15-020			91215020	98/4	58	M12x1,25	T	20
	04.96 - 02.00		50	7	S90-7-25-006			91725006	98/4	58	M12x1,25	T	20
PUNTO Van (188AX)													
	02.00 - 10.09	S1-1-12-25-32-19	10	1	S90-1-05-011			91105011	98/4	58	M12x1,25	T	18
	02.00 - 10.09	M12x1,25x32, KG60°	30	2	S90-2-15-020			91215020	98/4	58	M12x1,25	T	18
	02.00 - 10.09		50	7	S90-7-25-006			91725006	98/4	58	M12x1,25	T	18
PUNTO Van (199)													
	04.08 -	S1-1-12-50-22-17	24	2	S90-2-12-006		S3	91212006	100/4	56,5	M12x1,5	T	13
	04.08 -	M12x1,5x22, KG60°	32	2	S90-2-16-004		S3	91216004	100/4	56,5	M12x1,5	T	13
	04.08 -		40	2	S90-2-20-002			91220002	100/4	56,5	M12x1,5	T	13
	04.08 -		50	7	S90-7-25-002			91725002	100/4	56,5	M12x1,5	T	13
SEICENTO (187)													
	01.98 - 01.10	S1-1-12-25-27-19	10	1	S90-1-05-011			91105011	98/4	58	M12x1,25	T	13
	01.98 - 01.10	M12x1,25x27, KG60°	30	2	S90-2-15-020			91215020	98/4	58	M12x1,25	T	13
	01.98 - 01.10		50	7	S90-7-25-006			91725006	98/4	58	M12x1,25	T	13
SEICENTO Van (187)													
	01.98 - 01.10	S1-1-12-25-27-19	10	1	S90-1-05-011			91105011	98/4	58	M12x1,25	T	13
	01.98 - 01.10	M12x1,25x27, KG60°	30	2	S90-2-15-020			91215020	98/4	58	M12x1,25	T	13
	01.98 - 01.10		50	7	S90-7-25-006			91725006	98/4	58	M12x1,25	T	13
STILO (192)													
	10.01 - 11.10	S1-1-12-25-22-17	10	1	S90-1-05-011			91105011	98/4	58	M12x1,25	T	26
	10.01 - 11.10	M12x1,25x22, KG60°	30	2	S90-2-15-020			91215020	98/4	58	M12x1,25	T	26
	10.01 - 11.10		50	7	S90-7-25-006			91725006	98/4	58	M12x1,25	T	26
STILO Multi Wagon (192)													
	01.03 - 08.08	S1-1-12-25-22-17	10	1	S90-1-05-011			91105011	98/4	58	M12x1,25	T	26
	01.03 - 08.08	M12x1,25x22, KG60°	30	2	S90-2-15-020			91215020	98/4	58	M12x1,25	T	26
	01.03 - 08.08		50	7	S90-7-25-006			91725006	98/4	58	M12x1,25	T	26
FORD													
B-MAX (JK)													
	10.12 -		30	4	S90-4-15-007		S9, S23	91415007	108/4	63,3	M12x1,5	T	7,5
	10.12 -		30	6	S90-6-15-053		S33	91615015	108/4	63,3	M12x1,5	T	7,5
	10.12 -		40	4	S90-4-20-010		S9, S23	91420010	108/4	63,3	M12x1,5	T	7,5
	10.12 -		40	6	S90-6-20-041		S33	91620005	108/4	63,3	M12x1,5	T	7,5
	10.12 -		50	4	S90-4-25-008		S9, S23	91425008	108/4	63,3	M12x1,5	T	7,5
	10.12 -		60	4	S90-4-30-003		S9, S23	91430003	108/4	63,3	M12x1,5	T	7,5
B-MAX Van													
	10.12 -		30	4	S90-4-15-007		S9, S23	91415007	108/4	63,3	M12x1,5	T	7,5
	10.12 -		30	6	S90-6-15-053		S33	91615015	108/4	63,3	M12x1,5	T	7,5
	10.12 -		40	4	S90-4-20-010		S9, S23	91420010	108/4	63,3	M12x1,5	T	7,5
	10.12 -		40	6	S90-6-20-041		S33	91620005	108/4	63,3	M12x1,5	T	7,5
	10.12 -		50	4	S90-4-25-008		S9, S23	91425008	108/4	63,3	M12x1,5	T	7,5
	10.12 -		60	4	S90-4-30-003		S9, S23	91430003	108/4	63,3	M12x1,5	T	7,5
C-MAX (DM2)													
	02.07 -		30	4	S90-4-15-005		S9, S23	91415005	108/5	63,3	M12x1,5	T	37,5
	02.07 -		40	4	S90-4-20-008		S9, S23	91420008	108/5	63,3	M12x1,5	T	37,5
	02.07 -		50	4	S90-4-25-022		S9, S23	91425022	108/5	63,3	M12x1,5	T	37,5
C-MAX II													
	12.10 -		20	6	S90-6-10-024		S33	91610024	108/5	63,3	M12x1,5	§21	
	12.10 -		30	4	S90-4-15-005		S9, S23	91415005	108/5	63,3	M12x1,5	§21	
	12.10 -		30	6	S90-6-15-011		S33	91615011	108/5	63,3	M12x1,5	§21	
	12.10 -		40	4	S90-4-20-008		S9, S23	91420008	108/5	63,3	M12x1,5	§21	
	12.10 -		50	4	S90-4-25-022		S9, S23	91425022	108/5	63,3	M12x1,5	§21	
	12.10 -		60	4	S90-4-30-024		S9, S23	91430024	108/5	63,3	M12x1,5	§21	
	12.10 -		70	4	S90-4-35-007		S9, S23	91435007	108/5	63,3	M12x1,5	§21	
EXPLORER (U2)													
	01.93 -		50	4	S90-4-25-010		S9, S23	91425010	114,3/5	70,5	1/2"UNF	§21	
	01.93 -		60	4	S90-4-30-005		S9, S23	91430005	114,3/5	70,5	1/2"UNF	§21	
	01.93 -		70	4	S90-4-35-001		S9, S23	91435001	114,3/5	70,5	1/2"UNF	§21	
	01.93 -		90	4	S90-4-45-001		S9, S23	91445001	114,3/5	70,5	1/2"UNF	§21	
FIESTA IV (JA_, JB_)													
	08.95 - 09.02		10	5	S90-5-05-004		S33	91505004	108/4	63,3	M12x1,5	T	26
	08.95 - 09.02		30	6	S90-6-15-015		S33	91615015	108/4	63,3	M12x1,5	T	26
	08.95 - 09.02		40	6	S90-6-20-005		S33	91620005	108/4	63,3	M12x1,5	T	26
	08.95 - 09.02		50	4	S90-4-25-008		S9, S23	91425008	108/4	63,3	M12x1,5	T	26
	08.95 - 09.02		60	4	S90-4-30-003		S9, S23	91430003	108/4	63,3	M12x1,5	T	26
FIESTA V (JH_, JD_)													
	11.01 - 03.10		10	5	S90-5-05-004		S11, S33	91505004	108/4	63,3	M12x1,5	T	22,5
	11.01 - 03.10		30	6	S90-6-15-015		S33	91615015	108/4	63,3	M12x1,5	T	22,5
	11.01 - 03.10		40	4	S90-4-20-010		S9, S23	91420010	108/4	63,3	M12x1,5	T	22,5
	11.01 - 03.10		40	6	S90-6-20-005		S33	91620005	108/4	63,3	M12x1,5	T	22,5
	11.01 - 03.10		50	4	S90-4-25-008		S9, S23	91425008	108/4	63,3	M12x1,5	T	22,5
	11.01 - 03.10		60	4	S90-4-30-003		S9, S23	91430003	108/4	63,3	M12x1,5	T	22,5
FIESTA VI													
	06.08 -		30	4	S90-4-15-007		S9, S23	91415007	108/4	63,3	M12x1,5	T	17,5
	06.08 -		30	6	S90-6-15-015		S33	91615015	108/4	63,3	M12x1,5	T	17,5
	06.08 -		40	4	S90-4-20-010		S9, S23	91420010	108/4	63,3	M12x1,5	T	17,5
	06.08 -		40	6	S90-6-20-005		S33	91620005	108/4	63,3	M12x1,5	T	17,5
	06.08 -		50	4	S90-4-25-008		S9, S23	91425008	108/4	63,3	M12x1,5	T	17,5
	06.08 -		60	4	S90-4-30-003		S9, S23	91430003	108/4	63,3	M12x1,5	T	17,5
FOCUS (DAW, DBW)													
	10.98 - 12.07		10	5	S90-5-05-004		S33	91505004	108/4	63,3	M12x1,5	T	28,5
	10.98 - 12.07		30	6	S90-6-15-015		S33	91615015	108/4	63,3	M12x1,5	T	28,5
	10.98 - 12.07		40	6	S90-6-20-005		S33	91620005	108/4	63,3	M12x1,5	T	28,5
	10.98 - 12.07		50	4	S90-4-25-008		S9, S23	91425008	108/4	63,3	M12x1,5	T	28,5
	10.98 - 12.07		60	4	S90-4-30-003		S9, S23	91430003	108/4	63,3	M12x1,5	T	28,5
FOCUS C-MAX													
	10.03 - 03.07		30	4	S90-4-15-005		S9, S23	91415005	108/5	63,3	M12x1,5	T	37,5
	10.03 - 03.07		40	4	S90-4-20-008		S9, S23	91420008	108/5	63,3	M12x1,5	T	37,5
	10.03 - 03.07		50	4	S90-4-25-022		S9, S23	91425022	108/5	63,3	M12x1,5	T	37,5
FOCUS II (DA_)													
	11.04 -		30	4	S90-4-15-005		S9, S23	91415005	108/5	63,3	M12x1,5	T	22,5
	11.04 -		40	4	S90-4-20-008		S9, S23	91420008	108/5	63,3	M12x1,5	T	22,5
	11.04 -		50	4	S90-4-25-022		S9, S23	91425022	108/5	63,3	M12x1,5	T	22,5
	11.04 -		60	4	S90-4-30-024		S9, S23	91430024	108/5	63,3	M12x1,5	T	22,5
	11.04 -		70	4	S90-4-35-007		S9, S23	91435007	108/5	63,3	M12x1,5	T	22,5

Modell | *Model*	Baujahr | *Year*	Original-radschraube (nicht bestellbar) | *Original Bolt (not available)*	Spurweiten-änd. Achse | *Total track widening* (mm)	Eibach System	Artikel-Nr. silber | *Part-No. silver*	Artikel-Nr. schwarz | *Part-No. black*	Hinweise | *Notes*	Kennzeichnung | *Stamping*	Lochkreis | - Anzahl | *Bolt pattern* | *No. of holes*	Zentrierung | *Centre bore* (mm)	Gewinde | *Thread*	Gutachten | *Homologation*	ET-Grenze | *Offset frontier*
FORD													
FOCUS II Cabriolet (DB3)													
FOCUS II Convertible (DB3)	10.06 -		30	4	S90-4-15-005			S9, S23	91415005	108/5	63,3	M12x1,5	T	22,5
	10.06 -		40	4	S90-4-20-008			S9, S23	91420008	108/5	63,3	M12x1,5	T	22,5
	10.06 -		50	4	S90-4-25-022			S9, S23	91425022	108/5	63,3	M12x1,5	T	22,5
	10.06 -		60	4	S90-4-30-024			S9, S23	91430024	108/5	63,3	M12x1,5	T	22,5
	10.06 -		70	4	S90-4-35-007			S9, S23	91435007	108/5	63,3	M12x1,5	T	22,5
FOCUS II Kombi (DA_)														
FOCUS II Estate (DA_)	11.04 - 09.12		30	4	S90-4-15-005			S9, S23	91415005	108/5	63,3	M12x1,5	T	22,5
	11.04 - 09.12		40	4	S90-4-20-008			S9, S23	91420008	108/5	63,3	M12x1,5	T	22,5
	11.04 - 09.12		50	4	S90-4-25-022			S9, S23	91425022	108/5	63,3	M12x1,5	T	22,5
	11.04 - 09.12		60	4	S90-4-30-024			S9, S23	91430024	108/5	63,3	M12x1,5	T	22,5
	11.04 - 09.12		70	4	S90-4-35-007			S9, S23	91435007	108/5	63,3	M12x1,5	T	22,5
FOCUS II Stufenheck (DA_)														
FOCUS II Saloon (DA_)	04.05 -		30	4	S90-4-15-005			S9, S23	91415005	108/5	63,3	M12x1,5	T	22,5
	04.05 -		40	4	S90-4-20-008			S9, S23	91420008	108/5	63,3	M12x1,5	T	22,5
	04.05 -		50	4	S90-4-25-022			S9, S23	91425022	108/5	63,3	M12x1,5	T	22,5
	04.05 -		60	4	S90-4-30-024			S9, S23	91430024	108/5	63,3	M12x1,5	T	22,5
	04.05 -		70	4	S90-4-35-007			S9, S23	91435007	108/5	63,3	M12x1,5	T	22,5
FOCUS III														
	04.11 -		30	4	S90-4-15-005			S9, S23	91415005	108/5	63,3	M12x1,5	T	20
	04.11 -		40	4	S90-4-20-008			S9, S23	91420008	108/5	63,3	M12x1,5	T	20
	04.11 -		50	4	S90-4-25-022			S9, S23	91425022	108/5	63,3	M12x1,5	T	20
	04.11 -		60	4	S90-4-30-024			S9, S23	91430024	108/5	63,3	M12x1,5	T	20
	04.11 -		70	4	S90-4-35-007			S9, S23	91435007	108/5	63,3	M12x1,5	T	20
FOCUS III Van														
	04.11 -		30	4	S90-4-15-005			S9, S23	91415005	108/5	63,3	M12x1,5	T	20
	04.11 -		40	4	S90-4-20-008			S9, S23	91420008	108/5	63,3	M12x1,5	T	20
	04.11 -		50	4	S90-4-25-022			S9, S23	91425022	108/5	63,3	M12x1,5	T	20
	04.11 -		60	4	S90-4-30-024			S9, S23	91430024	108/5	63,3	M12x1,5	T	20
	04.11 -		70	4	S90-4-35-007			S9, S23	91435007	108/5	63,3	M12x1,5	T	20
FOCUS III Stufenheck														
FOCUS III Saloon	04.11 -		30	4	S90-4-15-005			S9, S23	91415005	108/5	63,3	M12x1,5	T	20
	04.11 -		40	4	S90-4-20-008			S9, S23	91420008	108/5	63,3	M12x1,5	T	20
	04.11 -		50	4	S90-4-25-022			S9, S23	91425022	108/5	63,3	M12x1,5	T	20
	04.11 -		60	4	S90-4-30-024			S9, S23	91430024	108/5	63,3	M12x1,5	T	20
	04.11 -		70	4	S90-4-35-007			S9, S23	91435007	108/5	63,3	M12x1,5	T	20
FOCUS III Turnier														
	05.11 -		30	4	S90-4-15-005			S9, S23	91415005	108/5	63,3	M12x1,5	T	20
	05.11 -		40	4	S90-4-20-008			S9, S23	91420008	108/5	63,3	M12x1,5	T	20
	05.11 -		50	4	S90-4-25-022			S9, S23	91425022	108/5	63,3	M12x1,5	T	20
	05.11 -		60	4	S90-4-30-024			S9, S23	91430024	108/5	63,3	M12x1,5	T	20
	05.11 -		70	4	S90-4-35-007			S9, S23	91435007	108/5	63,3	M12x1,5	T	20
FOCUS Turnier (DNW)														
FOCUS Station Wagon (DNW)	02.99 - 12.07		10	5	S90-5-05-004			S33	91505004	108/4	63,3	M12x1,5	T	28,5
	02.99 - 12.07		30	6	S90-6-15-015			S33	91615015	108/4	63,3	M12x1,5	T	28,5
	02.99 - 12.07		40	6	S90-6-20-005			S33	91620005	108/4	63,3	M12x1,5	T	28,5
	02.99 - 12.07		50	4	S90-4-25-008			S9, S23	91425008	108/4	63,3	M12x1,5	T	28,5
	02.99 - 12.07		60	4	S90-4-30-003			S9, S23	91430003	108/4	63,3	M12x1,5	T	28,5
FOCUS Stufenheck (DFW)														
FOCUS Saloon (DFW)	02.99 - 12.07		10	5	S90-5-05-004			S33	91505004	108/4	63,3	M12x1,5	T	28,5
	02.99 - 12.07		30	6	S90-6-15-015			S33	91615015	108/4	63,3	M12x1,5	T	28,5
	02.99 - 12.07		40	6	S90-6-20-005			S33	91620005	108/4	63,3	M12x1,5	T	28,5
	02.99 - 12.07		50	4	S90-4-25-008			S9, S23	91425008	108/4	63,3	M12x1,5	T	28,5
	02.99 - 12.07		60	4	S90-4-30-003			S9, S23	91430003	108/4	63,3	M12x1,5	T	28,5
FUSION (JU_)														
	08.02 - 12.12		10	5	S90-5-05-004			S33	91505004	108/4	63,3	M12x1,5	T	32,5
	08.02 - 12.12		30	6	S90-6-15-015			S33	91615015	108/4	63,3	M12x1,5	T	32,5
	08.02 - 12.12		40	6	S90-6-20-005			S33	91620005	108/4	63,3	M12x1,5	T	32,5
	08.02 - 12.12		50	4	S90-4-25-008			S9, S23	91425008	108/4	63,3	M12x1,5	T	32,5
	08.02 - 12.12		60	4	S90-4-30-003			S9, S23	91430003	108/4	63,3	M12x1,5	T	32,5
GALAXY (WGR)														
	03.95 - 05.06	S4-7-14-50-37-19	10	1	S90-1-05-016			S11	91105016	112/5	57	M14x1,5	T	30
	03.95 - 05.06	M14x1,5x37, KU r=14	30	2	S90-2-15-013				91215013	112/5	57	M14x1,5	T	30
	03.95 - 05.06		40	2	S90-2-20-003				91220003	112/5	57	M14x1,5	T	30
	03.95 - 05.06		50	7	S90-7-25-028				91725005	112/5	57	M14x1,5	T	30
GALAXY (WA6)														
	05.06 -		20	6	S90-6-10-022			S6, S33	91610014	108/5	63,3	M14x1,5	T	20
	05.06 -		30	6	S90-6-15-046			S6, S33	91615011	108/5	63,3	M14x1,5	T	20
	05.06 -		40	4	S90-4-20-022			S9, S23	91420022	108/5	63,3	M14x1,5	T	20
	05.06 -		50	4	S90-4-25-039			S9, S23	91425039	108/5	63,3	M14x1,5	T	20
	05.06 -		60	4	S90-4-30-029			S9, S23	91430029	108/5	63,3	M14x1,5	T	20
GRAND C-MAX (DXA)														
	12.10 -		20	6	S90-6-10-024			S33	91610024	108/5	63,3	M12x1,5	§21	
	12.10 -		30	4	S90-4-15-005			S9, S23	91415005	108/5	63,3	M12x1,5	§21	
	12.10 -		30	6	S90-6-15-011			S33	91615011	108/5	63,3	M12x1,5	§21	
	12.10 -		40	4	S90-4-20-008			S9, S23	91420008	108/5	63,3	M12x1,5	§21	
	12.10 -		50	4	S90-4-25-022			S9, S23	91425022	108/5	63,3	M12x1,5	§21	
	12.10 -		60	4	S90-4-30-024			S9, S23	91430024	108/5	63,3	M12x1,5	§21	
	12.10 -		70	4	S90-4-35-007			S9, S23	91435007	108/5	63,3	M12x1,5	§21	
KA (RB_)														
	09.96 - 11.08		10	5	S90-5-05-004			S33	91505004	108/4	63,3	M12x1,5	T	21
	09.96 - 11.08		30	6	S90-6-15-015			S33	91615015	108/4	63,3	M12x1,5	T	21
	09.96 - 11.08		40	6	S90-6-20-005			S33	91620005	108/4	63,3	M12x1,5	T	21
	09.96 - 11.08		50	4	S90-4-25-008			S9, S23	91425008	108/4	63,3	M12x1,5	T	21
	09.96 - 11.08		60	4	S90-4-30-003			S9, S23	91430003	108/4	63,3	M12x1,5	T	21
KA Van (RB_)														
	09.96 - 11.08		10	5	S90-5-05-004			S33	91505004	108/4	63,3	M12x1,5	T	21
	09.96 - 11.08		30	6	S90-6-15-015			S33	91615015	108/4	63,3	M12x1,5	T	21
	09.96 - 11.08		40	6	S90-6-20-005			S33	91620005	108/4	63,3	M12x1,5	T	21
	09.96 - 11.08		50	4	S90-4-25-008			S9, S23	91425008	108/4	63,3	M12x1,5	T	21
	09.96 - 11.08		60	4	S90-4-30-003			S9, S23	91430003	108/4	63,3	M12x1,5	T	21
KA (RU8)														
	10.08 -	S1-1-12-25-22-17	10	1	S90-1-05-011				91105011	98/4	58	M12x1,25	T	5
	10.08 -	M12x1,25x22, KG60°	20	2	S90-2-10-021			S3	91210021	98/4	58	M12x1,25	T	5
	10.08 -		30	2	S90-2-15-020				91215020	98/4	58	M12x1,25	T	5
	10.08 -		40	7	S90-7-20-012				91720012	98/4	58	M12x1,25	T	5
	10.08 -		50	7	S90-7-25-006				91725006	98/4	58	M12x1,25	T	5
	10.08 -		60	7	S90-7-30-005				91730005	98/4	58	M12x1,25	T	5

Modell | *Model*	Baujahr | *Year*	Original-radschraube (nicht bestellbar) | *Original Bolt (not available)*	Spurweiten-änd. Achse | *Total track widening* (mm)	Eibach System	Artikel-Nr. silber | *Part-No. silver*	Artikel-Nr. schwarz | *Part-No. black*	Hinweise | *Notes*	Kennzeich-nung | *Stamping*	Lochkreis | - Anzahl | *Bolt pattern* | *No. of holes*	Zentrierung | *Centre bore* (mm)	Gewinde | *Thread*	Gutachten | *Homologation*	ET-Grenze | *Offset frontier*
FORD													
KUGA I													
	03.08 -		30	4	S90-4-15-005		S9, S23	91415005	108/5	63,3	M12x1,5	T	20
	03.08 -		40	4	S90-4-20-008		S9, S23	91420008	108/5	63,3	M12x1,5	T	20
	03.08 -		50	4	S90-4-25-022		S9, S23	91425022	108/5	63,3	M12x1,5	T	20
	03.08 -		60	4	S90-4-30-024		S9, S23	91430024	108/5	63,3	M12x1,5	T	20
	03.08 -		70	4	S90-4-35-007		S9, S23	91435007	108/5	63,3	M12x1,5	T	20
KUGA II (DM2)													
	05.12 -		30	4	S90-4-15-005		S9, S23	91415005	108/5	63,3	M12x1,5	T	20
	05.12 -		40	4	S90-4-20-008		S9, S23	91420008	108/5	63,3	M12x1,5	T	20
	05.12 -		50	4	S90-4-25-022		S9, S23	91425022	108/5	63,3	M12x1,5	T	20
	05.12 -		60	4	S90-4-30-024		S9, S23	91430024	108/5	63,3	M12x1,5	T	20
	05.12 -		70	4	S90-4-35-007		S9, S23	91435007	108/5	63,3	M12x1,5	T	20
KUGA II Van													
	05.12 -		30	4	S90-4-15-005		S9, S23	91415005	108/5	63,3	M12x1,5	T	20
	05.12 -		40	4	S90-4-20-008		S9, S23	91420008	108/5	63,3	M12x1,5	T	20
	05.12 -		50	4	S90-4-25-022		S9, S23	91425022	108/5	63,3	M12x1,5	T	20
	05.12 -		60	4	S90-4-30-024		S9, S23	91430024	108/5	63,3	M12x1,5	T	20
	05.12 -		70	4	S90-4-35-007		S9, S23	91435007	108/5	63,3	M12x1,5	T	20
MAVERICK (UNS, UDS)													
	02.93 - 04.98		60	8	S90-8-30-003		S9, S11, S23	91830003	139,7/6	106	M12x1,25	T	-5
MAVERICK (1N2)													
	02.01 -		30	4	S90-4-15-002		S9, S23	91415002	114,3/5	67	M12x1,5	T	20
	02.01 -		40	4	S90-4-20-001		S9, S23	91420001	114,3/5	67	M12x1,5	T	20
	02.01 -		50	4	S90-4-25-016		S9, S23	91425016	114,3/5	67	M12x1,5	T	20
MONDEO II (BAP)													
	08.96 - 09.00		10	5	S90-5-05-004		S33	91505004	108/4	63,3	M12x1,5	§21	
	08.96 - 09.00		30	6	S90-6-15-015		S33	91615015	108/4	63,3	M12x1,5	§21	
	08.96 - 09.00		40	6	S90-6-20-005		S33	91620005	108/4	63,3	M12x1,5	§21	
	08.96 - 09.00		50	4	S90-4-25-008		S9, S23	91425008	108/4	63,3	M12x1,5	§21	
	08.96 - 09.00		60	4	S90-4-30-003		S9, S23	91430003	108/4	63,3	M12x1,5	§21	
MONDEO II Turnier (BNP)													
MONDEO II Station Wagon (BNP)	08.96 - 09.00		10	5	S90-5-05-004		S33	91505004	108/4	63,3	M12x1,5	§21	
	08.96 - 09.00		30	6	S90-6-15-015		S33	91615015	108/4	63,3	M12x1,5	§21	
	08.96 - 09.00		40	6	S90-6-20-005		S33	91620005	108/4	63,3	M12x1,5	§21	
	08.96 - 09.00		50	4	S90-4-25-008		S9, S23	91425008	108/4	63,3	M12x1,5	§21	
	08.96 - 09.00		60	4	S90-4-30-003		S9, S23	91430003	108/4	63,3	M12x1,5	§21	
MONDEO II Stufenheck (BFP)													
MONDEO II Saloon (BFP)	08.96 - 09.00		10	5	S90-5-05-004		S33	91505004	108/4	63,3	M12x1,5	§21	
	08.96 - 09.00		30	6	S90-6-15-015		S33	91615015	108/4	63,3	M12x1,5	§21	
	08.96 - 09.00		40	6	S90-6-20-005		S33	91620005	108/4	63,3	M12x1,5	§21	
	08.96 - 09.00		50	4	S90-4-25-008		S9, S23	91425008	108/4	63,3	M12x1,5	§21	
	08.96 - 09.00		60	4	S90-4-30-003		S9, S23	91430003	108/4	63,3	M12x1,5	§21	
MONDEO III (B5Y)													
	11.00 - 08.07		30	4	S90-4-15-005		S9, S23	91415005	108/5	63,3	M12x1,5	§21	37,5
	11.00 - 08.07		30	6	S90-6-15-011		S33	91615011	108/5	63,3	M12x1,5	T	37,5
	11.00 - 08.07		40	4	S90-4-20-008		S9, S23	91420008	108/5	63,3	M12x1,5	§21	37,5
	11.00 - 08.07		50	4	S90-4-25-022		S9, S23	91425022	108/5	63,3	M12x1,5	§21	37,5
MONDEO III Turnier (BWY)													
MONDEO III Station Wagon (BWY)	11.00 - 03.07		30	4	S90-4-15-005		S9, S23	91415005	108/5	63,3	M12x1,5	§21	37,5
	11.00 - 03.07		30	6	S90-6-15-011		S33	91615011	108/5	63,3	M12x1,5	T	37,5
	11.00 - 03.07		40	4	S90-4-20-008		S9, S23	91420008	108/5	63,3	M12x1,5	§21	37,5
	11.00 - 03.07		50	4	S90-4-25-022		S9, S23	91425022	108/5	63,3	M12x1,5	§21	37,5
MONDEO III Stufenheck (B4Y, B5Y)													
MONDEO III Saloon (B4Y, B5Y)	11.00 - 03.07		30	4	S90-4-15-005		S9, S23	91415005	108/5	63,3	M12x1,5	§21	37,5
	11.00 - 03.07		30	6	S90-6-15-011		S33	91615011	108/5	63,3	M12x1,5	T	37,5
	11.00 - 03.07		40	4	S90-4-20-008		S9, S23	91420008	108/5	63,3	M12x1,5	§21	37,5
	11.00 - 03.07		50	4	S90-4-25-022		S9, S23	91425022	108/5	63,3	M12x1,5	§21	37,5
MONDEO IV (BA7)													
	03.07 -		20	6	S90-6-10-024		S33	91610024	108/5	63,3	M12x1,5	T	20
	03.07 -		30	6	S90-6-15-011		S33	91615011	108/5	63,3	M12x1,5	T	20
	03.07 -		40	4	S90-4-20-008		S9, S23	91420008	108/5	63,3	M12x1,5	T	20
	03.07 -		50	4	S90-4-25-022		S9, S23	91425022	108/5	63,3	M12x1,5	T	20
	03.07 -		60	4	S90-4-30-024		S9, S23	91430024	108/5	63,3	M12x1,5	T	20
	03.07 -		70	4	S90-4-35-007		S9, S23	91435007	108/5	63,3	M12x1,5	T	20
MONDEO IV Stufenheck (BA7)													
MONDEO IV Saloon (BA7)	03.07 -		20	6	S90-6-10-024		S33	91610024	108/5	63,3	M12x1,5	T	20
	03.07 -		30	6	S90-6-15-011		S33	91615011	108/5	63,3	M12x1,5	T	20
	03.07 -		40	4	S90-4-20-008		S9, S23	91420008	108/5	63,3	M12x1,5	T	20
	03.07 -		50	4	S90-4-25-022		S9, S23	91425022	108/5	63,3	M12x1,5	T	20
	03.07 -		60	4	S90-4-30-024		S9, S23	91430024	108/5	63,3	M12x1,5	T	20
	03.07 -		70	4	S90-4-35-007		S9, S23	91435007	108/5	63,3	M12x1,5	T	20
MONDEO IV Turnier (BA7)													
MONDEO IV Station Wagon (BA7)	03.07 -		20	6	S90-6-10-024		S33	91610024	108/5	63,3	M12x1,5	T	20
	03.07 -		30	6	S90-6-15-011		S33	91615011	108/5	63,3	M12x1,5	T	20
	03.07 -		40	4	S90-4-20-008		S9, S23	91420008	108/5	63,3	M12x1,5	T	20
	03.07 -		50	4	S90-4-25-022		S9, S23	91425022	108/5	63,3	M12x1,5	T	20
	03.07 -		60	4	S90-4-30-024		S9, S23	91430024	108/5	63,3	M12x1,5	T	20
	03.07 -		70	4	S90-4-35-007		S9, S23	91435007	108/5	63,3	M12x1,5	T	20
MONDEO V													
	01.13 -		20	6	S90-6-10-024		S33	91610024	108/5	63,3	M12x1,5		
	01.13 -		30	6	S90-6-15-011		S33	91615011	108/5	63,3	M12x1,5		
	01.13 -		40	4	S90-4-20-008		S9, S23	91420008	108/5	63,3	M12x1,5		
	01.13 -		50	4	S90-4-25-022		S9, S23	91425022	108/5	63,3	M12x1,5		
	01.13 -		60	4	S90-4-30-024		S9, S23	91430024	108/5	63,3	M12x1,5		
	01.13 -		70	4	S90-4-35-007		S9, S23	91435007	108/5	63,3	M12x1,5		
MONDEO V Stufenheck													
MONDEO V Saloon	09.14 -		20	6	S90-6-10-024		S33	91610024	108/5	63,3	M12x1,5		
	09.14 -		30	6	S90-6-15-011		S33	91615011	108/5	63,3	M12x1,5		
	09.14 -		40	4	S90-4-20-008		S9, S23	91420008	108/5	63,3	M12x1,5		
	09.14 -		50	4	S90-4-25-022		S9, S23	91425022	108/5	63,3	M12x1,5		
	09.14 -		60	4	S90-4-30-024		S9, S23	91430024	108/5	63,3	M12x1,5		
	09.14 -		70	4	S90-4-35-007		S9, S23	91435007	108/5	63,3	M12x1,5		

Modell | *Model*	Baujahr | *Year*	Original-radschraube (nicht bestellbar) | *Original Bolt (not available)*	Spurweiten-änd. Achse | *Total track widening* (mm)	Eibach System	Artikel-Nr. silber | *Part-No. silver*	Artikel-Nr. schwarz | *Part-No. black*	Hinweise | *Notes*	Kennzeich-nung | *Stamping*	Lochkreis | - Anzahl | *Bolt pattern* | *No. of holes*	Zentrierung | *Centre bore* (mm)	Gewinde | *Thread*	Gutachten | *Homologation*	ET-Grenze | *Offset frontier*
FORD													
MONDEO V Turnier													
MONDEO V Station Wagon	09.14 -		20	6	S90-6-10-024		S33	91610024	108/5	63,3	M12x1,5		
	09.14 -		30	6	S90-6-15-011		S33	91615011	108/5	63,3	M12x1,5		
	09.14 -		40	4	S90-4-20-008		S9, S23	91420008	108/5	63,3	M12x1,5		
	09.14 -		50	4	S90-4-25-022		S9, S23	91425022	108/5	63,3	M12x1,5		
	09.14 -		60	4	S90-4-30-024		S9, S23	91430024	108/5	63,3	M12x1,5		
	09.14 -		70	4	S90-4-35-007		S9, S23	91435007	108/5	63,3	M12x1,5		
MUSTANG Coupe													
	02.14 -		30	6	S90-6-15-056	S90-6-15-056-B	S33	91615056	114,3/5	70,5	M14x1,5	§21	
	02.14 -		40	4	S90-4-20-044	S90-4-20-044-B	S9, S23	91420044	114,3/5	70,5	M14x1,5	§21	
	02.14 -		50	4	S90-4-25-063	S90-4-25-063-B	S9, S23	91425063	114,3/5	70,5	M14x1,5	§21	
	02.14 -		60	4	S90-4-30-057	S90-4-30-057-B	S9, S23	91430057	114,3/5	70,5	M14x1,5	§21	
	02.14 -		70	4	S90-4-35-010	S90-4-35-010-B	S9, S23	91435010	114,3/5	70,5	M14x1,5	§21	
MUSTANG (S197)													
	09.93 -		40	4	S90-4-20-018		S9, S23	91420016	114,3/5	70,5	1/2"UNF	§21	
	09.93 -		50	4	S90-4-25-010		S9, S23	91425010	114,3/5	70,5	1/2"UNF	§21	
	09.93 -		60	4	S90-4-30-005		S9, S23	91430005	114,3/5	70,5	1/2"UNF	§21	
	09.93 -		70	4	S90-4-35-001		S9, S23	91435001	114,3/5	70,5	1/2"UNF	§21	
	09.93 -		90	4	S90-4-45-001		S9, S23	91445001	114,3/5	70,5	1/2"UNF	§21	
MUSTANG (T8) Coupe Hinterachse													
MUSTANG (T8) Coupe rear axle	12.04 -		40	4	S90-4-20-017		S23, S37	91420016	114,3/5	70,5	1/2"UNF	T	9
	12.04 -		50	4	S90-4-25-033		S23, S37	91425010	114,3/5	70,5	1/2"UNF	T	9
	12.04 -		60	4	S90-4-30-020		S23, S37	91430005	114,3/5	70,5	1/2"UNF	T	9
	12.04 -		70	4	S90-4-35-006		S23, S37	91435001	114,3/5	70,5	1/2"UNF	T	9
	12.04 -		90	4	S90-4-45-001		S23, S37	91445001	114,3/5	70,5	1/2"UNF	T	9
MUSTANG (T8) Coupe Vorderachse													
MUSTANG (T8) Coupe front axle	12.04 -		40	4	S90-4-20-016		S23, S37	91420016	114,3/5	70,5	1/2"UNF	T	9
	12.04 -		50	4	S90-4-25-032		S23, S37	91425010	114,3/5	70,5	1/2"UNF	T	9
	12.04 -		60	4	S90-4-30-019		S23, S37	91430005	114,3/5	70,5	1/2"UNF	T	9
	12.04 -		70	4	S90-4-35-005		S23, S37	91435001	114,3/5	70,5	1/2"UNF	T	9
	12.04 -		90	4	S90-4-45-001		S23, S37	91445001	114,3/5	70,5	1/2"UNF	T	9
MUSTANG (T8) Cabriolet Hinterachse													
MUSTANG (T8) Convertible rear axle	09.05 -		40	4	S90-4-20-017		S23, S37	91420016	114,3/5	70,5	1/2"UNF	T	9
	09.05 -		50	4	S90-4-25-033		S23, S37	91425010	114,3/5	70,5	1/2"UNF	T	9
	09.05 -		60	4	S90-4-30-020		S23, S37	91430005	114,3/5	70,5	1/2"UNF	T	9
	09.05 -		70	4	S90-4-35-006		S23, S37	91435001	114,3/5	70,5	1/2"UNF	T	9
	09.05 -		90	4	S90-4-45-001		S23, S37	91445001	114,3/5	70,5	1/2"UNF	T	9
MUSTANG (T8) Cabriolet Vorderachse													
MUSTANG (T8) Convertible front axle	09.05 -		40	4	S90-4-20-016		S23, S37	91420016	114,3/5	70,5	1/2"UNF	T	9
	09.05 -		50	4	S90-4-25-032		S23, S37	91425010	114,3/5	70,5	1/2"UNF	T	9
	09.05 -		60	4	S90-4-30-019		S23, S37	91430005	114,3/5	70,5	1/2"UNF	T	9
	09.05 -		70	4	S90-4-35-005		S23, S37	91435001	114,3/5	70,5	1/2"UNF	T	9
	09.05 -		90	4	S90-4-45-001		S23, S37	91445001	114,3/5	70,5	1/2"UNF	T	9
MUSTANG Cabriolet													
MUSTANG Convertible (C)	09.93 -		40	4	S90-4-20-018		S9, S23	91420016	114,3/5	70,5	1/2"UNF	§21	
	09.93 -		50	4	S90-4-25-010		S9, S23	91425010	114,3/5	70,5	1/2"UNF	§21	
	09.93 -		60	4	S90-4-30-005		S9, S23	91430005	114,3/5	70,5	1/2"UNF	§21	
	09.93 -		70	4	S90-4-35-001		S9, S23	91435001	114,3/5	70,5	1/2"UNF	§21	
	09.93 -		90	4	S90-4-45-001		S9, S23	91445001	114,3/5	70,5	1/2"UNF	§21	
MUSTANG Cabriolet													
MUSTANG Convertible	02.14 -		30	6	S90-6-15-056	S90-6-15-056-B	S33	91615056	114,3/5	70,5	M14x1,5	§21	
	02.14 -		40	4	S90-4-20-044	S90-4-20-044-B	S9, S23	91420044	114,3/5	70,5	M14x1,5	§21	
	02.14 -		50	4	S90-4-25-063	S90-4-25-063-B	S9, S23	91425063	114,3/5	70,5	M14x1,5	§21	
	02.14 -		60	4	S90-4-30-057	S90-4-30-057-B	S9, S23	91430057	114,3/5	70,5	M14x1,5	§21	
	02.14 -		70	4	S90-4-35-010	S90-4-35-010-B	S9, S23	91435010	114,3/5	70,5	M14x1,5	§21	
PUMA (ECT)													
	03.97 - 06.02		10	5	S90-5-05-004		S33	91505004	108/4	63,3	M12x1,5	T	19
	03.97 - 06.02		30	6	S90-6-15-015		S33	91615015	108/4	63,3	M12x1,5	T	19
	03.97 - 06.02		40	6	S90-6-20-005		S33	91620005	108/4	63,3	M12x1,5	T	19
	03.97 - 06.02		50	4	S90-4-25-008		S9, S23	91425008	108/4	63,3	M12x1,5	T	19
	03.97 - 06.02		60	4	S90-4-30-003		S9, S23	91430003	108/4	63,3	M12x1,5	T	19
RANGER (ER, EQ)													
	03.98 - 06.06		50	8	S90-8-25-004		S9, S11, S23	91825004	139,7/6	106	M12x1,5	T	-25
	03.98 - 06.06		60	8	S90-8-30-004		S9, S11, S23	91830004	139,7/6	106	M12x1,5	T	-25
RANGER (TKE)													
	04.11 -		42	4	S90-4-21-003		S9	91421003	139,7/6	93	M12x1,5	T	25
	04.11 -		50	4	S90-4-25-062		S9	91425062	139,7/6	93	M12x1,5	T	25
	04.11 -		60	4	S90-4-30-056		S9	91430056	139,7/6	93	M12x1,5	T	25
S-MAX (WA6)													
	05.06 -		20	6	S90-6-10-022		S6, S33	91610014	108/5	63,3	M14x1,5	T	20
	05.06 -		30	6	S90-6-15-046		S6, S33	91615011	108/5	63,3	M14x1,5	T	20
	05.06 -		40	4	S90-4-20-022		S9, S23	91420022	108/5	63,3	M14x1,5	T	20
	05.06 -		50	4	S90-4-25-039		S9, S23	91425039	108/5	63,3	M14x1,5	T	20
	05.06 -		60	4	S90-4-30-029		S9, S23	91430029	108/5	63,3	M14x1,5	T	20
STREET KA (RL2)													
	03.03 - 07.05		10	5	S90-5-05-004		S33	91505004	108/4	63,3	M12x1,5	T	19
	03.03 - 07.05		30	6	S90-6-15-015		S33	91615015	108/4	63,3	M12x1,5	T	19
	03.03 - 07.05		40	6	S90-6-20-005		S33	91620005	108/4	63,3	M12x1,5	T	19
	03.03 - 07.05		50	4	S90-4-25-008		S9, S23	91425008	108/4	63,3	M12x1,5	T	19
	03.03 - 07.05		60	4	S90-4-30-003		S9, S23	91430003	108/4	63,3	M12x1,5	T	19
TOURNEO CUSTOM Bus													
	12.12 -		20	6	S90-6-10-027		S3, S32	91610027	160/5	65	M14x1,5	ABE	46
	12.12 -		68	4	S90-4-34-001		S6, S9	91434001	160/5	65	M14x1,5	ABE	22
TOURNEO CUSTOM Kombi													
TOURNEO CUSTOM Station Wagon	12.12 -		20	6	S90-6-10-027		S3, S32	91610027	160/5	65	M14x1,5	ABE	46
	12.12 -		68	4	S90-4-34-001		S6, S9	91434001	160/5	65	M14x1,5	ABE	22
TOURNEO CUSTOM Kasten													
TOURNEO CUSTOM Box	12.12 -		20	6	S90-6-10-027		S3, S32	91610027	160/5	65	M14x1,5	ABE	46
	12.12 -		68	4	S90-4-34-001		S6, S9	91434001	160/5	65	M14x1,5	ABE	22

Modell | *Model*	Baujahr | *Year*	Original-radschraube (nicht bestellbar) | *Original Bolt (not available)*	Spurweiten-änd. Achse | *Total track widening* (mm)	Eibach System	Artikel-Nr. silber | *Part-No. silver*	Artikel-Nr. schwarz | *Part-No. black*	Hinweise | *Notes*	Kennzeichnung | *Stamping*	Lochkreis | - Anzahl | *Bolt pattern* | *No. of holes*	Zentrierung | *Centre bore* (mm)	Gewinde | *Thread*	Gutachten | *Homologation*	ET-Grenze | *Offset frontier*
HONDA													
ACCORD VI (CG, CK)													
	12.97 - 12.03		10	5	S90-5-05-018		S33	91505018	114,3/4	64	M12x1,5	§21	
ACCORD VI Coupe (CG)													
	12.97 - 06.03		10	5	S90-5-05-018		S33	91505018	114,3/4	64	M12x1,5	§21	
CIVIC VI Aerodeck (MB, MC)													
	04.98 - 02.01		10	5	S90-5-05-018		S33	91505018	114,3/4	64	M12x1,5	T	40
CIVIC VI Aerodeck (MB, MC)													
	04.98 - 02.01		10	5	S90-5-05-005		S33	91505005	100/4	56	M12x1,5	T	30
CIVIC VII Hatchback (EU, EP, EV)													
	03.99 - 02.06		20	6	S90-6-10-012		S33	91610012	114,3/5	64	M12x1,5	§21	
	03.99 - 02.06		30	4	S90-4-15-010		S9	91415010	114,3/5	64	M12x1,5	§21	
	03.99 - 02.06		30	6	S90-6-15-038		S33	91615038	114,3/5	64	M12x1,5	§21	
	03.99 - 02.06		40	4	S90-4-20-014		S9	91420014	114,3/5	64	M12x1,5	§21	
	03.99 - 02.06		40	6	S90-6-20-015		S33	91620015	114,3/5	64	M12x1,5	§21	
CIVIC VIII Hatchback (FN, FK)													
	09.05 -		20	6	S90-6-10-012		S33	91610012	114,3/5	64	M12x1,5	T	15
	09.05 -		30	4	S90-4-15-010		S9	91415010	114,3/5	64	M12x1,5	T	15
	09.05 -		30	6	S90-6-15-038		S33	91615038	114,3/5	64	M12x1,5	T	15
	09.05 -		40	6	S90-6-20-015		S33	91620015	114,3/5	64	M12x1,5	T	15
	09.05 -		40	4	S90-4-20-014		S9	91420014	114,3/5	64	M12x1,5	T	15
	09.05 -		60	4	S90-4-30-027		S33	91430027	114,3/5	64	M12x1,5	T	15
CIVIC VIII Stufenheck (FD-FA) ***CIVIC VIII Saloon (FD-FA)***	09.05 -		20	6	S90-6-10-012		S33	91610012	114,3/5	64	M12x1,5	T	15
	09.05 -		30	4	S90-4-15-010		S9	91415010	114,3/5	64	M12x1,5	T	15
	09.05 -		30	6	S90-6-15-038		S33	91615038	114,3/5	64	M12x1,5	T	15
	09.05 -		40	4	S90-4-20-014		S9	91420014	114,3/5	64	M12x1,5	T	15
	09.05 -		40	6	S90-6-20-015		S33	91620015	114,3/5	64	M12x1,5	T	15
	09.05 -		60	4	S90-4-30-027		S33	91430027	114,3/5	64	M12x1,5	T	15
CIVIC IX (FK)													
	09.11 -		20	6	S90-6-10-012		S33	91610012	114,3/5	64	M12x1,5	T	15
	09.11 -		30	4	S90-4-15-010		S9	91415010	114,3/5	64	M12x1,5	T	15
	09.11 -		30	6	S90-6-15-038		S33	91615038	114,3/5	64	M12x1,5	T	15
	09.11 -		40	4	S90-4-20-014		S9	91420014	114,3/5	64	M12x1,5	T	15
	09.11 -		40	6	S90-6-20-015		S33	91620015	114,3/5	64	M12x1,5	T	15
	09.11 -		60	4	S90-4-30-027		S9	91430027	114,3/5	64	M12x1,5	T	15
CIVIC IX Tourer (FK)													
	01.14 -		20	6	S90-6-10-012		S33	91610012	114,3/5	64	M12x1,5	T	15
	01.14 -		30	4	S90-4-15-010		S9	91415010	114,3/5	64	M12x1,5	T	15
	01.14 -		30	6	S90-6-15-038		S33	91615038	114,3/5	64	M12x1,5	T	15
	01.14 -		40	4	S90-4-20-014		S9	91420014	114,3/5	64	M12x1,5	T	15
	01.14 -		40	6	S90-6-20-015		S33	91620015	114,3/5	64	M12x1,5	T	15
	01.14 -		60	4	S90-4-30-027		S9	91430027	114,3/5	64	M12x1,5	T	15
CR-V II (RD)													
	09.01 - 09.06		20	6	S90-6-10-012		S33	91610012	114,3/5	64	M12x1,5	T	20
	09.01 - 09.06		30	4	S90-4-15-010		S9	91415010	114,3/5	64	M12x1,5	T	20
	09.01 - 09.06		30	6	S90-6-15-038		S33	91615038	114,3/5	64	M12x1,5	T	20
	09.01 - 09.06		40	4	S90-4-20-014		S9	91420014	114,3/5	64	M12x1,5	T	20
	09.01 - 09.06		40	6	S90-6-20-015		S33	91620015	114,3/5	64	M12x1,5	T	20
	09.01 - 09.06		60	4	S90-4-30-027		S9	91430027	114,3/5	64	M12x1,5	T	20
CR-V III (RE)													
	06.06 -		20	6	S90-6-10-012		S33	91610012	114,3/5	64	M12x1,5	T	20
	06.06 -		30	4	S90-4-15-010		S9	91415010	114,3/5	64	M12x1,5	T	20
	06.06 -		30	6	S90-6-15-038		S33	91615038	114,3/5	64	M12x1,5	T	20
	06.06 -		40	4	S90-4-20-014		S9	91420014	114,3/5	64	M12x1,5	T	20
	06.06 -		40	6	S90-6-20-015		S33	91620015	114,3/5	64	M12x1,5	T	20
	06.06 -		60	4	S90-4-30-027		S9	91430027	114,3/5	64	M12x1,5	T	20
CR-Z (ZF1)													
	06.10 -		20	6	S90-6-10-012		S33	91610012	114,3/5	64	M12x1,5	T	15
	06.10 -		30	4	S90-4-15-010		S9	91415010	114,3/5	64	M12x1,5	T	15
	06.10 -		30	6	S90-6-15-038		S33	91615038	114,3/5	64	M12x1,5	T	15
	06.10 -		40	4	S90-4-20-014		S9	91420014	114,3/5	64	M12x1,5	T	15
	06.10 -		40	6	S90-6-20-015		S33	91620015	114,3/5	64	M12x1,5	T	15
	06.10 -		60	4	S90-4-30-027		S9	91430027	114,3/5	64	M12x1,5	T	15
PRELUDE (BB1, BB2, BB3)													
	02.92 - 09.96		10	5	S90-5-05-018		S33	91505018	114,3/4	64	M12x1,5	§21	
PRELUDE (BB9)													
	10.96 - 10.00		10	5	S90-5-05-018		S33	91505018	114,3/4	64	M12x1,5	§21	
HYUNDAI													
ACCENT III (MC) Hinterachse ***ACCENT III (MC) rear axle***	11.05 - 11.10		30	6	S90-6-15-041		S16, S33	91615010	100/4	54	M12x1,5	§21	
	11.05 - 11.10		40	6	S90-6-20-032		S16, S33	91620026	100/4	54	M12x1,5	§21	
	11.05 - 11.10		60	4	S90-4-30-021		S9	91430021	100/4	54	M12x1,5	§21	
ACCENT III (MC) Vorderachse ***ACCENT III (MC) front axle***	11.05 - 11.10		30	6	S90-6-15-040		S16, S33	91615010	100/4	54	M12x1,5	§21	
	11.05 - 11.10		40	6	S90-6-20-026		S16, S33	91620026	100/4	54	M12x1,5	§21	
	11.05 - 11.10		60	4	S90-4-30-021		S9	91430021	100/4	54	M12x1,5	§21	
ACCENT Stufenheck (MC) Hinterachse ***ACCENT Saloon (MC) rear axle***	11.05 - 11.10		30	6	S90-6-15-041		S16, S33	91615010	100/4	54	M12x1,5	§21	
	11.05 - 11.10		40	6	S90-6-20-032		S16, S33	91620026	100/4	54	M12x1,5	§21	
	11.05 - 11.10		60	4	S90-4-30-021		S9	91430021	100/4	54	M12x1,5	§21	
ACCENT Stufenheck (MC) Vorderachse ***ACCENT Saloon (MC) front axle***	11.05 - 11.10		30	6	S90-6-15-040		S16, S33	91615010	100/4	54	M12x1,5	§21	
	11.05 - 11.10		40	6	S90-6-20-026		S16, S33	91620026	100/4	54	M12x1,5	§21	
	11.05 - 11.10		60	4	S90-4-30-021		S9	91430021	100/4	54	M12x1,5	§21	
COUPE (RD)	06.96 - 04.02		30	4	S90-4-15-006		S6, S9, S66	91415006	114,3/4	67	M12x1,5	§21	
	06.96 - 04.02		50	4	S90-4-25-024		S6, S9, S66	91425024	114,3/4	67	M12x1,5	§21	
	06.96 - 04.02		60	4	S90-4-30-011		S6, S9, S66	91430011	114,3/4	67	M12x1,5	§21	

Modell | *Model*	Baujahr | *Year*	Original-radschraube (nicht bestellbar) | *Original Bolt (not available)*	Spurweiten-änd. Achse | *Total track widening* (mm)	Eibach System	Artikel-Nr. silber | *Part-No. silver*	Artikel-Nr. schwarz | *Part-No. black*	Hinweise | *Notes*	Kennzeichnung | *Stamping*	Lochkreis | - Anzahl | *Bolt pattern* | *No. of holes*	Zentrierung | *Centre bore* (mm)	Gewinde | *Thread*	Gutachten | *Homologation*	ET-Grenze | *Offset frontier*
HYUNDAI													
COUPE (GK)	08.01 - 08.09		20	6	S90-6-10-013		S16, S33	91610002	114,3/5	67	M12x1,5	T	16
	08.01 - 08.09		30	4	S90-4-15-002		S9	91415002	114,3/5	67	M12x1,5	T	16
	08.01 - 08.09		30	6	S90-6-15-039		S16, S33	91615023	114,3/5	67	M12x1,5	T	16
	08.01 - 08.09		40	4	S90-4-20-001		S9	91420001	114,3/5	67	M12x1,5	T	16
	08.01 - 08.09		50	4	S90-4-25-016		S9	91425016	114,3/5	67	M12x1,5	T	16
	08.01 - 08.09		60	4	S90-4-30-015		S9	91430015	114,3/5	67	M12x1,5	T	16
GALLOPER (JK-01)	02.97 - 12.03		50	8	S90-8-25-002		S9, S11	91825002	139,7/6	106,5	M12x1,5	T	-35
	02.97 - 12.03		60	8	S90-8-30-002		S9, S11	91830002	139,7/6	106,5	M12x1,5	T	-35
GENESIS Coupe	01.08 -		20	6	S90-6-10-005		S16, S33	91610002	114,3/5	67	M12x1,5	T	5
	01.08 -		30	4	S90-4-15-018		S9, S23	91415002	114,3/5	67	M12x1,5	T	5
	01.08 -		30	6	S90-6-15-027		S16, S33	91615023	114,3/5	67	M12x1,5	T	5
	01.08 -		40	4	S90-4-20-024		S9, S23	91420001	114,3/5	67	M12x1,5	T	5
	01.08 -		40	6	S90-6-20-028		S16, S33	91620028	114,3/5	67	M12x1,5	T	5
	01.08 -		50	4	S90-4-25-041		S9, S23	91425016	114,3/5	67	M12x1,5	T	5
	01.08 -		60	4	S90-4-30-032		S9, S23	91430015	114,3/5	67	M12x1,5	T	5
GRANDEUR (TG)	04.05 -		20	6	S90-6-10-005		S16, S43	91610002	114,3/5	67	M12x1,5	§21	
	04.05 -		30	4	S90-4-15-002		S9	91415002	114,3/5	67	M12x1,5	§21	
	04.05 -		30	6	S90-6-15-027		S16, S44	91615023	114,3/5	67	M12x1,5	§21	
	04.05 -		40	4	S90-4-20-001		S9	91420001	114,3/5	67	M12x1,5	§21	
	04.05 -		50	4	S90-4-25-016		S9	91425016	114,3/5	67	M12x1,5	§21	
	04.05 -		60	4	S90-4-30-015		S9	91430015	114,3/5	67	M12x1,5	§21	
i10 (PA)	10.07 -		30	6	S90-6-15-040		S16, S33	91615010	100/4	54	M12x1,5	§21	
	10.07 -		40	4	S90-4-20-011		S9, S23	91420011	100/4	54	M12x1,5	§21	
	10.07 -		40	6	S90-6-20-026		S16, S33	91620026	100/4	54	M12x1,5	§21	
	10.07 -		60	4	S90-4-30-021		S9, S23	91430021	100/4	54	M12x1,5	§21	
i10 (IA)	12.13 -		30	6	S90-6-15-040		S16, S33	91615010	100/4	54	M12x1,5	§21	
	12.13 -		40	4	S90-4-20-011		S9, S23	91420011	100/4	54	M12x1,5	§21	
	12.13 -		40	6	S90-6-20-026		S16, S33	91620026	100/4	54	M12x1,5	§21	
	12.13 -		60	4	S90-4-30-021		S9, S23	91430021	100/4	54	M12x1,5	§21	
i20 (PB, PBT)	08.08 -		30	6	S90-6-15-040		S16, S33	91615010	100/4	54	M12x1,5	T	15
	08.08 -		40	4	S90-4-20-011		S9, S23	91420011	100/4	54	M12x1,5	T	15
	08.08 -		40	6	S90-6-20-026		S16, S33	91620026	100/4	54	M12x1,5	T	15
	08.08 -		60	4	S90-4-30-021		S9, S23	91430021	100/4	54	M12x1,5	T	15
i30 (FD)	10.07 - 11.11		20	6	S90-6-10-005		S16, S33	91610002	114,3/5	67	M12x1,5	T	25
	10.07 - 11.11		30	4	S90-4-15-018		S9, S23	91415002	114,3/5	67	M12x1,5	T	25
	10.07 - 11.11		30	6	S90-6-15-027		S16, S33	91615023	114,3/5	67	M12x1,5	T	25
	10.07 - 11.11		40	4	S90-4-20-024		S9, S23	91420001	114,3/5	67	M12x1,5	T	25
	10.07 - 11.11		40	6	S90-6-20-028		S16, S33	91620028	114,3/5	67	M12x1,5	T	25
	10.07 - 11.11		50	4	S90-4-25-041		S9, S23	91425016	114,3/5	67	M12x1,5	T	25
	10.07 - 11.11		60	4	S90-4-30-032		S9, S23	91430015	114,3/5	67	M12x1,5	T	25
i30 (GD)	11.11 -		20	6	S90-6-10-005		S16, S33	91610002	114,3/5	67	M12x1,5	T	18
	11.11 -		30	4	S90-4-15-018		S9	91415002	114,3/5	67	M12x1,5	T	18
	11.11 -		30	6	S90-6-15-027		S16, S33	91615023	114,3/5	67	M12x1,5	T	18
	11.11 -		40	4	S90-4-20-024		S9	91420001	114,3/5	67	M12x1,5	T	18
	11.11 -		40	6	S90-6-20-028		S16, S33	91620028	114,3/5	67	M12x1,5	T	18
	11.11 -		50	4	S90-4-25-041		S9	91425016	114,3/5	67	M12x1,5	T	18
	11.11 -		60	4	S90-4-30-032		S9	91430015	114,3/5	67	M12x1,5	T	18
i30 CW (FD)	10.07 - 06.12		20	6	S90-6-10-005		S16, S33	91610002	114,3/5	67	M12x1,5	T	25
	10.07 - 06.12		30	4	S90-4-15-018		S9	91415002	114,3/5	67	M12x1,5	T	25
	10.07 - 06.12		30	6	S90-6-15-027		S16, S33	91615023	114,3/5	67	M12x1,5	T	25
	10.07 - 06.12		40	4	S90-4-20-024		S9	91420001	114,3/5	67	M12x1,5	T	25
	10.07 - 06.12		40	6	S90-6-20-028		S16, S33	91620028	114,3/5	67	M12x1,5	T	25
	10.07 - 06.12		50	4	S90-4-25-041		S9	91425016	114,3/5	67	M12x1,5	T	25
	10.07 - 06.12		60	4	S90-4-30-032		S9	91430015	114,3/5	67	M12x1,5	T	25
i30 CW (GD)	06.12 -		20	6	S90-6-10-005		S16, S33	91610002	114,3/5	67	M12x1,5	T	18
	06.12 -		30	4	S90-4-15-018		S9	91415002	114,3/5	67	M12x1,5	T	18
	06.12 -		30	6	S90-6-15-027		S16, S33	91615023	114,3/5	67	M12x1,5	T	18
	06.12 -		40	4	S90-4-20-024		S9	91420001	114,3/5	67	M12x1,5	T	18
	06.12 -		40	6	S90-6-20-028		S16, S33	91620028	114,3/5	67	M12x1,5	T	18
	06.12 -		50	4	S90-4-25-041		S9	91425016	114,3/5	67	M12x1,5	T	18
	06.12 -		60	4	S90-4-30-032		S9	91430015	114,3/5	67	M12x1,5	T	18
i40 (VF)	03.12 -		20	6	S90-6-10-005		S16, S33	91610002	114,3/5	67	M12x1,5	T	10
	03.12 -		30	6	S90-6-15-027		S16, S33	91615023	114,3/5	67	M12x1,5	T	10
	03.12 -		30	4	S90-4-15-018		S9	91415002	114,3/5	67	M12x1,5	T	10
	03.12 -		40	6	S90-6-20-028		S16, S33	91620028	114,3/5	67	M12x1,5	T	10
	03.12 -		40	4	S90-4-20-024		S9	91420001	114,3/5	67	M12x1,5	T	10
	03.12 -		50	4	S90-4-25-041		S9	91425016	114,3/5	67	M12x1,5	T	10
	03.12 -		60	4	S90-4-30-032		S9	91430015	114,3/5	67	M12x1,5	T	10
i40 CW (VF)	07.11 -		20	6	S90-6-10-005		S16, S33	91610002	114,3/5	67	M12x1,5	T	10
	07.11 -		30	6	S90-6-15-027		S16, S33	91615023	114,3/5	67	M12x1,5	T	10
	07.11 -		30	4	S90-4-15-018		S9	91415002	114,3/5	67	M12x1,5	T	10
	07.11 -		40	6	S90-6-20-028		S16, S33	91620028	114,3/5	67	M12x1,5	T	10
	07.11 -		40	4	S90-4-20-024		S9	91420001	114,3/5	67	M12x1,5	T	10
	07.11 -		50	4	S90-4-25-041		S9	91425016	114,3/5	67	M12x1,5	T	10
	07.11 -		60	4	S90-4-30-032		S9	91430015	114,3/5	67	M12x1,5	T	10
ix20 (JC)	11.10 -		20	6	S90-6-10-005		S16, S33	91610002	114,3/5	67	M12x1,5	§21	
	11.10 -		30	4	S90-4-15-018		S9, S23	91415002	114,3/5	67	M12x1,5	§21	
	11.10 -		30	6	S90-6-15-027		S16, S33	91615023	114,3/5	67	M12x1,5	§21	
	11.10 -		40	4	S90-4-20-024		S9, S23	91420001	114,3/5	67	M12x1,5	§21	
	11.10 -		40	6	S90-6-20-028		S16, S33	91620028	114,3/5	67	M12x1,5	§21	
	11.10 -		50	4	S90-4-25-041		S9, S23	91425016	114,3/5	67	M12x1,5	§21	
	11.10 -		60	4	S90-4-30-032		S9, S23	91430015	114,3/5	67	M12x1,5	§21	

Modell | *Model*	Baujahr | *Year*	Originalradschraube (nicht bestellbar) | *Original Bolt (not available)*	Spurweitenänd. Achse | *Total track widening* (mm)	Eibach System	Artikel-Nr. silber | *Part-No. silver*	Artikel-Nr. schwarz | *Part-No. black*	Hinweise | *Notes*	Kennzeichnung | *Stamping*	Lochkreis | - Anzahl | *Bolt pattern* | *No. of holes*	Zentrierung | *Centre bore* (mm)	Gewinde | *Thread*	Gutachten | *Homologation*	ET-Grenze | *Offset frontier*
HYUNDAI													
ix35 (LM, EL, ELH)													
	08.09 -		30	4	S90-4-15-002		S9, S23	91415002	114,3/5	67	M12x1,5	T	20
	08.09 -		40	4	S90-4-20-001		S9, S23	91420001	114,3/5	67	M12x1,5	T	20
	08.09 -		50	4	S90-4-25-016		S9, S23	91425016	114,3/5	67	M12x1,5	T	20
	08.09 -		60	4	S90-4-30-015		S9, S23	91430015	114,3/5	67	M12x1,5	T	20
ix55													
	09.06 -		40	4	S90-4-20-023		S9, S23	91420001	114,3/5	67	M12x1,5	T	5
	09.06 -		50	4	S90-4-25-040		S9, S23	91425016	114,3/5	67	M12x1,5	T	5
	09.06 -		60	4	S90-4-30-015		S23	91430015	114,3/5	67	M12x1,5	T	5
SANTA FÉ I (SM)													
	11.00 - 03.06		30	4	S90-4-15-002		S9, S23	91415002	114,3/5	67	M12x1,5	T	16
	11.00 - 03.06		40	4	S90-4-20-001		S9, S23	91420001	114,3/5	67	M12x1,5	T	16
	11.00 - 03.06		50	4	S90-4-25-016		S9, S23	91425016	114,3/5	67	M12x1,5	T	16
	11.00 - 03.06		60	4	S90-4-30-015		S9, S23	91430015	114,3/5	67	M12x1,5	T	16
SANTA FÉ II (CM)													
	10.05 -		20	6	S90-6-10-005		S16, S33	91610002	114,3/5	67	M12x1,5	§21	
	10.05 -		30	4	S90-4-15-017		S9, S23, S33	91415002	114,3/5	67	M12x1,5	§21	
	10.05 -		30	6	S90-6-15-027		S16, S33	91615023	114,3/5	67	M12x1,5	§21	
	10.05 -		40	4	S90-4-20-023		S9, S23, S33	91420001	114,3/5	67	M12x1,5	§21	
	10.05 -		40	6	S90-6-20-028		S16, S33	91620028	114,3/5	67	M12x1,5	§21	
	10.05 -		50	4	S90-4-25-040		S9, S23, S33	91425016	114,3/5	67	M12x1,5	§21	
	10.05 -		60	4	S90-4-30-037		S9, S23	91430015	114,3/5	67	M12x1,5	§21	
SANTA FÉ III (DM)													
	09.12 -		20	6	S90-6-10-005		S16, S33	91610002	114,3/5	67	M12x1,5	T	17
	09.12 -		30	4	S90-4-15-017		S9, S23, S33	91415002	114,3/5	67	M12x1,5	T	17
	09.12 -		30	6	S90-6-15-027		S16, S33	91615023	114,3/5	67	M12x1,5	T	17
	09.12 -		40	4	S90-4-20-023		S9, S23, S33	91420001	114,3/5	67	M12x1,5	T	17
	09.12 -		40	6	S90-6-20-028		S16, S33	91620028	114,3/5	67	M12x1,5	T	17
	09.12 -		50	4	S90-4-25-040		S9, S23, S33	91425016	114,3/5	67	M12x1,5	T	17
	09.12 -		60	4	S90-4-30-037		S9, S23	91430015	114,3/5	67	M12x1,5	T	17
SONATA V (NF)													
	01.05 - 12.10		20	6	S90-6-10-013		S16, S33	91610002	114,3/5	67	M12x1,5	§21	
	01.05 - 12.10		30	4	S90-4-15-002		S9	91415002	114,3/5	67	M12x1,5	§21	
	01.05 - 12.10		30	6	S90-6-15-039		S16, S33	91615023	114,3/5	67	M12x1,5	§21	
	01.05 - 12.10		40	4	S90-4-20-001		S9	91420001	114,3/5	67	M12x1,5	§21	
	01.05 - 12.10		50	4	S90-4-25-016		S9	91425016	114,3/5	67	M12x1,5	§21	
	01.05 - 12.10		60	4	S90-4-30-015		S9	91430015	114,3/5	67	M12x1,5	§21	
TERRACAN (HP)													
	06.01 - 12.06		50	8	S90-8-25-002		S9, S11	91825002	139,7/6	106,5	M12x1,5	T	-10
	06.01 - 12.06		60	8	S90-8-30-002		S9, S11	91830002	139,7/6	106,5	M12x1,5	T	-10
TUCSON (LM, EL, ELH)													
	04.10 -		30	4	S90-4-15-002		S9, S23	91415002	114,3/5	67	M12x1,5	T	20
	04.10 -		40	4	S90-4-20-001		S9, S23	91420001	114,3/5	67	M12x1,5	T	20
	04.10 -		50	4	S90-4-25-016		S9, S23	91425016	114,3/5	67	M12x1,5	T	20
	04.10 -		60	4	S90-4-30-015		S9, S23	91430015	114,3/5	67	M12x1,5	T	20
TUCSON (JM)													
	08.04 - 03.10		30	4	S90-4-15-002		S9, S23	91415002	114,3/5	67	M12x1,5	T	20
	08.04 - 03.10		40	4	S90-4-20-001		S9, S23	91420001	114,3/5	67	M12x1,5	T	20
	08.04 - 03.10		50	4	S90-4-25-016		S9, S23	91425016	114,3/5	67	M12x1,5	T	20
	08.04 - 03.10		60	4	S90-4-30-015		S9, S23	91430015	114,3/5	67	M12x1,5	T	20
TUCSON (TLE)													
	06.15 -		30	4	S90-4-15-002		S9, S23	91415002	114,3/5	67	M12x1,5	T	15
	06.15 -		40	4	S90-4-20-001		S9, S23	91420001	114,3/5	67	M12x1,5	T	15
	06.15 -		50	4	S90-4-25-016		S9, S23	91425016	114,3/5	67	M12x1,5	T	15
	06.15 -		60	4	S90-4-30-015		S9, S23	91430015	114,3/5	67	M12x1,5	T	15
VERACRUZ (EN)													
	09.08 -		40	4	S90-4-20-023		S9, S23	91420001	114,3/5	67	M12x1,5	T	5
	09.08 -		50	4	S90-4-25-040		S9, S23	91425016	114,3/5	67	M12x1,5	T	5
	09.08 -		60	4	S90-4-30-015		S23	91430015	114,3/5	67	M12x1,5	T	5
JEEP													
CHEROKEE (XJ)													
	09.83 - 09.01		50	4	S90-4-25-015		S9, S23	91425015	114,3/5	71,5	1/2"UNF	T	1
	09.83 - 09.01		60	4	S90-4-30-008		S9, S23	91430008	114,3/5	71,5	1/2"UNF	T	1
CHEROKEE (KJ)													
	09.01 - 01.08		50	4	S90-4-25-015		S9, S23	91425015	114,3/5	71,5	1/2"UNF	T	11
	09.01 - 01.08		60	4	S90-4-30-008		S9, S23	91430008	114,3/5	71,5	1/2"UNF	T	11
CHEROKEE (KL)													
	11.13 -	S1-1-12-25-27-19	30	2	S90-2-15-007			91215007	110/5	65	M12x1,25	T	11
	11.13 -	M12x1,25x27, KG60°	32	2	S90-2-16-001			91216001	110/5	65	M12x1,25	T	11
	11.13 -		40	2	S90-2-20-006			91220006	110/5	65	M12x1,25	T	11
	11.13 -		40	7	S90-7-20-034			91720034	110/5	65	M12x1,25	T	11
	11.13 -		50	7	S90-7-25-046			91725046	110/5	65	M12x1,25	T	11
	11.13 -		60	7	S90-7-30-054			91730054	110/5	65	M12x1,25	T	11
COMMANDER (XK)													
	09.05 - 12.10		50	4	S90-4-25-013		S9, S23	91425013	127/5	71,5	1/2"UNF	T	13
	09.05 - 12.10		54	4	S90-4-27-001		S9, S23	91427001	127/5	71,5	1/2"UNF	T	13
	09.05 - 12.10		60	4	S90-4-30-007		S9, S23	91430007	127/5	71,5	1/2"UNF	T	13
COMPASS (MK49)													
	08.06 -		20	6	S90-6-10-002		S33	91610002	114,3/5	67	M12x1,5	T	9
	08.06 -		30	4	S90-4-15-018		S9, S23	91415002	114,3/5	67	M12x1,5	T	9
	08.06 -		30	6	S90-6-15-023		S33	91615023	114,3/5	67	M12x1,5	T	9
	08.06 -		40	4	S90-4-20-024		S9, S23	91420001	114,3/5	67	M12x1,5	T	9
	08.06 -		50	4	S90-4-25-041		S9, S23	91425016	114,3/5	67	M12x1,5	T	9
	08.06 -		60	4	S90-4-30-032		S9, S23	91430015	114,3/5	67	M12x1,5	T	9
GRAND CHEROKEE I (ZJ)													
	09.91 - 04.99		50	4	S90-4-25-015		S9, S23	91425015	114,3/5	71,5	1/2"UNF	T	-4,6
	09.91 - 04.99		60	4	S90-4-30-008		S9, S23	91430008	114,3/5	71,5	1/2"UNF	T	-4,6
GRAND CHEROKEE II (WJ, WG)													
	09.98 - 09.05		54	4	S90-4-27-001		S4, S23	91427001	127/5	71,5	1/2"UNF	T	20,8
	09.98 - 09.05		60	4	S90-4-30-007		S9, S23	91430007	127/5	71,5	1/2"UNF	T	20,8

Modell | *Model*	Baujahr | *Year*	Originalradschraube (nicht bestellbar) | *Original Bolt (not available)*	Spurweitenänd. Achse | *Total track widening* (mm)	Eibach System	Artikel-Nr. silber | *Part-No. silver*	Artikel-Nr. schwarz | *Part-No. black*	Hinweise | *Notes*	Kennzeichnung | *Stamping*	Lochkreis | - Anzahl | *Bolt pattern* | *No. of holes*	Zentrierung | *Centre bore* (mm)	Gewinde | *Thread*	Gutachten | *Homologation*	ET-Grenze | *Offset frontier*
JEEP													
GRAND CHEROKEE III (WH)													
	06.05 - 12.10		50	4	S90-4-25-013		S9, S23, S41	91425013	127/5	71,5	1/2"UNF	T	20,8
	06.05 - 12.10		54	4	S90-4-27-001		S9, S23, S41	91427001	127/5	71,5	1/2"UNF	T	20,8
	06.05 - 12.10		60	4	S90-4-30-007		S9, S23, S41	91430007	127/5	71,5	1/2"UNF	T	20,8
GRAND CHEROKEE IV (WK, WK2)													
	06.10 - .		40	4	S90-4-20-042		S9, S23	91420042	127/5	71,5	M14x1,5	T	18
	06.10 - .		50	4	S90-4-25-061		S9, S23	91425061	127/5	71,5	M14x1,5	T	18
	06.10 - .		60	4	S90-4-30-055		S9, S23	91430055	127/5	71,5	M14x1,5	T	18
PATRIOT (MK74)													
	02.07 -		20	6	S90-6-10-002		S33	91610002	114,3/5	67	M12x1,5	T	9
	02.07 -		30	6	S90-6-15-023		S33	91615023	114,3/5	67	M12x1,5	T	9
	02.07 -		40	4	S90-4-20-024		S9, S23	91420001	114,3/5	67	M12x1,5	T	9
	02.07 -		40	6	S90-6-20-035		S33	91620028	114,3/5	67	M12x1,5	T	9
	02.07 -		50	4	S90-4-25-041		S9, S23	91425016	114,3/5	67	M12x1,5	T	9
	02.07 -		60	4	S90-4-30-032		S9, S23	91430015	114,3/5	67	M12x1,5	T	9
RENEGADE (BU)													
	07.14 -	S1-1-12-25-23-17	20	2	S90-2-15-007			91215007	110/5	65	M12x1,25	T	10
	07.14 -	M12x1,25x23, KG60°	32	2	S90-2-16-001			91216001	110/5	65	M12x1,25	T	10
	07.14 -		40	2	S90-2-20-006			91220006	110/5	65	M12x1,25	T	10
	07.14 -		40	7	S90-7-20-034			91720034	110/5	65	M12x1,25	T	10
	07.14 -		50	7	S90-7-25-046			91725046	110/5	65	M12x1,25	T	10
	07.14 -		60	7	S90-7-30-054			91730054	110/5	65	M12x1,25	T	10
WRANGLER II (TJ)													
	08.96 - 12.08		50	4	S90-4-25-015		S9, S23	91425015	114,3/5	71,5	1/2"UNF	T	1,75
	08.96 - 12.08		60	4	S90-4-30-008		S9, S23	91430008	114,3/5	71,5	1/2"UNF	T	1,75
WRANGLER III (JK)													
	04.07 -		50	4	S90-4-25-013		S9, S23	91425013	127/5	71,5	1/2"UNF	T	14,5
	04.07 -		54	4	S90-4-27-001		S9, S23	91427001	127/5	71,5	1/2"UNF	T	14,5
	04.07 -		60	4	S90-4-30-007		S9, S23	91430007	127/5	71,5	1/2"UNF	T	14,5
KIA													
CARENS III (UN)													
	09.06 -		10	5	S90-5-05-031		S33	91505027	114,3/5	67	M12x1,5	§21	
	09.06 -		20	6	S90-6-10-005		S33	91610002	114,3/5	67	M12x1,5	§21	
	09.06 -		30	4	S90-4-15-017		S9, S23, S33	91415002	114,3/5	67	M12x1,5	§21	
	09.06 -		30	6	S90-6-15-027		S33	91615023	114,3/5	67	M12x1,5	§21	
	09.06 -		40	4	S90-4-20-023		S9, S23, S33	91420001	114,3/5	67	M12x1,5	§21	
	09.06 -		50	4	S90-4-25-040		S9, S23, S33	91425016	114,3/5	67	M12x1,5	§21	
	09.06 -		60	4	S90-4-30-015		S9, S23	91430015	114,3/5	67	M12x1,5	§21	
CEE'D													
	05.12 -		20	6	S90-6-10-005		S33	91610002	114,3/5	67	M12x1,5	T	20
	05.12 -		30	4	S90-4-15-018		S9, S23	91415002	114,3/5	67	M12x1,5	T	20
	05.12 -		30	6	S90-6-15-027		S33	91615023	114,3/5	67	M12x1,5	T	20
	05.12 -		40	4	S90-4-20-024		S9	91420001	114,3/5	67	M12x1,5	T	20
	05.12 -		40	6	S90-6-20-028		S33	91620028	114,3/5	67	M12x1,5	T	20
	05.12 -		50	4	S90-4-25-041		S9	91425016	114,3/5	67	M12x1,5	T	20
	05.12 -		60	4	S90-4-30-037		S9	91430015	114,3/5	67	M12x1,5	T	20
CEE'D Schrägheck (ED) ***CEE'D Hatchback (ED)***	12.06 -		20	6	S90-6-10-005		S33	91610002	114,3/5	67	M12x1,5	T	21
	12.06 -		30	4	S90-4-15-018		S9, S23	91415002	114,3/5	67	M12x1,5	T	21
	12.06 -		30	6	S90-6-15-027		S33	91615023	114,3/5	67	M12x1,5	T	21
	12.06 -		40	4	S90-4-20-024		S9	91420001	114,3/5	67	M12x1,5	T	21
	12.06 -		40	6	S90-6-20-028		S33	91620028	114,3/5	67	M12x1,5	T	21
	12.06 -		50	4	S90-4-25-041		S9	91425016	114,3/5	67	M12x1,5	T	21
	12.06 -		60	4	S90-4-30-037		S9	91430015	114,3/5	67	M12x1,5	T	21
CEE'D SW (ED) ***CEE'D Estate (ED)***	09.07 -		20	6	S90-6-10-005		S33	91610002	114,3/5	67	M12x1,5	T	21
	09.07 -		30	4	S90-4-15-018		S9, S23	91415002	114,3/5	67	M12x1,5	T	21
	09.07 -		30	6	S90-6-15-027		S33	91615023	114,3/5	67	M12x1,5	T	21
	09.07 -		40	4	S90-4-20-024		S9	91420001	114,3/5	67	M12x1,5	T	21
	09.07 -		40	6	S90-6-20-028		S33	91620028	114,3/5	67	M12x1,5	T	21
	09.07 -		50	4	S90-4-25-041		S9	91425016	114,3/5	67	M12x1,5	T	21
	09.07 -		60	4	S90-4-30-037		S9	91430015	114,3/5	67	M12x1,5	T	21
CEE`D Sportswagon													
	09.12 -		20	6	S90-6-10-005		S33	91610002	114,3/5	67	M12x1,5	T	20
	09.12 -		30	4	S90-4-15-018		S9, S23	91415002	114,3/5	67	M12x1,5	T	20
	09.12 -		30	6	S90-6-15-027		S33	91615023	114,3/5	67	M12x1,5	T	20
	09.12 -		40	4	S90-4-20-024		S9	91420001	114,3/5	67	M12x1,5	T	20
	09.12 -		40	6	S90-6-20-028		S33	91620028	114,3/5	67	M12x1,5	T	20
	09.12 -		50	4	S90-4-25-041		S9	91425016	114,3/5	67	M12x1,5	T	20
	09.12 -		60	4	S90-4-30-037		S9	91430015	114,3/5	67	M12x1,5	T	20
CERATO (LD)													
	03.04 -		30	4	S90-4-15-006		S9	91415006	114,3/4	67	M12x1,5	§21	
	03.04 -		50	4	S90-4-25-024		S9	91425024	114,3/4	67	M12x1,5	§21	
	03.04 -		60	4	S90-4-30-011		S9	91430011	114,3/4	67	M12x1,5	§21	
CERATO Stufenheck (LD) ***CERATO Saloon (LD)***	04.04 -		30	4	S90-4-15-006		S9	91415006	114,3/4	67	M12x1,5	§21	
	04.04 -		50	4	S90-4-25-024		S9	91425024	114,3/4	67	M12x1,5	§21	
	04.04 -		60	4	S90-4-30-011		S9	91430011	114,3/4	67	M12x1,5	§21	
OPTIMA													
	01.10 -		20	6	S90-6-10-005		S33	91610002	114,3/5	67	M12x1,5	T	24
	01.10 -		30	4	S90-4-15-018		S9	91415002	114,3/5	67	M12x1,5	T	24
	01.10 -		30	6	S90-6-15-027		S33	91615023	114,3/5	67	M12x1,5	T	24
	01.10 -		40	4	S90-4-20-024		S9	91420001	114,3/5	67	M12x1,5	T	24
	01.10 -		40	6	S90-6-20-028		S33	91620028	114,3/5	67	M12x1,5	T	24
	01.10 -		50	4	S90-4-25-041		S9	91425016	114,3/5	67	M12x1,5	§21	24
	01.10 -		60	4	S90-4-30-037		S9	91430015	114,3/5	67	M12x1,5	§21	24
PICANTO (BA)													
	04.04 -		30	6	S90-6-15-045		S33	91615010	100/4	54	M12x1,5	§21	
	04.04 -		40	4	S90-4-20-011		S9	91420011	100/4	54	M12x1,5	§21	

Modell | *Model*	Baujahr | *Year*	Original-radschraube (nicht bestellbar) | *Original Bolt (not available)*	Spurweiten-änd. Achse | *Total track widening* (mm)	Eibach System	Artikel-Nr. silber | *Part-No. silver*	Artikel-Nr. schwarz | *Part-No. black*	Hinweise | *Notes*	Kennzeichnung | *Stamping*	Lochkreis | - Anzahl | *Bolt pattern* | *No. of holes*	Zentrierung | *Centre bore* (mm)	Gewinde | *Thread*	Gutachten | *Homologation*	ET-Grenze | *Offset frontier*
KIA													
PRO CEE'D (ED)													
	02.08 -		20	6	S90-6-10-005		S33	91610002	114,3/5	67	M12x1,5	T	21
	02.08 -		30	4	S90-4-15-018		S9, S23	91415002	114,3/5	67	M12x1,5	T	21
	02.08 -		30	6	S90-6-15-027		S33	91615023	114,3/5	67	M12x1,5	T	21
	02.08 -		40	4	S90-4-20-024		S9	91420001	114,3/5	67	M12x1,5	T	21
	02.08 -		40	6	S90-6-20-028		S33	91620028	114,3/5	67	M12x1,5	T	21
	02.08 -		50	4	S90-4-25-041		S9	91425016	114,3/5	67	M12x1,5	T	21
	02.08 -		60	4	S90-4-30-037		S9	91430015	114,3/5	67	M12x1,5	T	21
PRO CEE'D													
	03.13 -		20	6	S90-6-10-005		S33	91610002	114,3/5	67	M12x1,5	T	20
	03.13 -		30	4	S90-4-15-018		S9, S23	91415002	114,3/5	67	M12x1,5	T	20
	03.13 -		30	6	S90-6-15-027		S33	91615023	114,3/5	67	M12x1,5	T	20
	03.13 -		40	4	S90-4-20-024		S9	91420001	114,3/5	67	M12x1,5	T	20
	03.13 -		40	6	S90-6-20-028		S33	91620028	114,3/5	67	M12x1,5	T	20
	03.13 -		50	4	S90-4-25-041		S9	91425016	114,3/5	67	M12x1,5	T	20
	03.13 -		60	4	S90-4-30-037		S9	91430015	114,3/5	67	M12x1,5	T	20
RIO II (JB)													
	03.05 -		30	6	S90-6-15-040		S33	91615010	100/4	54	M12x1,5	§21	
	03.05 -		40	6	S90-6-20-026		S33	91620026	100/4	54	M12x1,5	§21	
	03.05 -		60	4	S90-4-30-021		S9	91430021	100/4	54	M12x1,5	§21	
RIO II Stufenheck (JB)													
RIO II Saloon (JB)	03.05 -		30	6	S90-6-15-040		S33	91615010	100/4	54	M12x1,5	§21	
	03.05 -		40	6	S90-6-20-026		S33	91620026	100/4	54	M12x1,5	§21	
	03.05 -		60	4	S90-4-30-021		S9	91430021	100/4	54	M12x1,5	§21	
RIO III (UB)													
	09.11 -		30	6	S90-6-15-040		S33	91615010	100/4	54	M12x1,5	T	6
	09.11 -		30	4	S90-4-15-015		S9	91415015	100/4	54	M12x1,5	T	6
	09.11 -		40	6	S90-6-20-026		S33	91620026	100/4	54	M12x1,5	T	6
	09.11 -		40	4	S90-4-20-011		S9	91420011	100/4	54	M12x1,5	T	6
	09.11 -		60	4	S90-4-30-021		S9	91430021	100/4	54	M12x1,5	T	6
RIO III Stufenheck (UB)													
RIO III Saloon (UB)	09.10 -		30	6	S90-6-15-040		S33	91615010	100/4	54	M12x1,5	T	6
	09.10 -		40	4	S90-4-15-015		S9	91415015	100/4	54	M12x1,5	T	6
	09.10 -		40	6	S90-6-20-026		S33	91620026	100/4	54	M12x1,5	T	6
	09.10 -		40	4	S90-4-20-011		S9	91420011	100/4	54	M12x1,5	T	6
	09.10 -		60	4	S90-4-30-021		S9	91430021	100/4	54	M12x1,5	T	6
SORENTO I (JC)													
	08.02 -		50	4	S90-4-25-038		S9	91425038	139,7/5	95,3	M12x1,5	T	15
	08.02 -		60	4	S90-4-30-028		S9	91430028	139,7/5	95,3	M12x1,5	T	15
SORENTO II (XM)													
	11.09 -		40	4	S90-4-20-023		S9, S23	91420001	114,3/5	67	M12x1,5	T	11
	11.09 -		50	4	S90-4-25-040		S9, S23	91425016	114,3/5	67	M12x1,5	T	11
	11.09 -		60	4	S90-4-30-015		S23	91430015	114,3/5	67	M12x1,5	T	11
SORENTO II (XM FL)													
	10.12 -		40	4	S90-4-20-023		S9, S23	91420001	114,3/5	67	M12x1,5	T	20,5
	10.12 -		50	4	S90-4-25-040		S9, S23	91425016	114,3/5	67	M12x1,5	T	20,5
	10.12 -		60	4	S90-4-30-015		S23	91430015	114,3/5	67	M12x1,5	T	20,5
SOUL (AM)													
	02.09 -		20	6	S90-6-10-005		S16, S33	91610002	114,3/5	67	M12x1,5	§21	
	02.09 -		30	4	S90-4-15-002		S1, S23	91415002	114,3/5	67	M12x1,5	§21	
	02.09 -		30	6	S90-6-15-027		S16, S33	91615023	114,3/5	67	M12x1,5	§21	
	02.09 -		40	4	S90-4-20-001		S1, S23	91420001	114,3/5	67	M12x1,5	§21	
	02.09 -		50	4	S90-4-25-016		S1, S23	91425016	114,3/5	67	M12x1,5	§21	
	02.09 -		60	4	S90-4-30-015		S1, S23	91430015	114,3/5	67	M12x1,5	§21	
SOUL II (PS)													
	02.14 -		20	6	S90-6-10-005		S16, S33	91610002	114,3/5	67	M12x1,5	T	17
	02.14 -		30	4	S90-4-15-002		S1, S23	91415002	114,3/5	67	M12x1,5	T	17
	02.14 -		30	6	S90-6-15-027		S16, S33	91615023	114,3/5	67	M12x1,5	T	17
	02.14 -		40	4	S90-4-20-001		S1, S23	91420001	114,3/5	67	M12x1,5	T	17
	02.14 -		50	4	S90-4-25-016		S1, S23	91425016	114,3/5	67	M12x1,5	T	17
	02.14 -		60	4	S90-4-30-015		S1, S23	91430015	114,3/5	67	M12x1,5	T	17
SPORTAGE (K00)													
	04.94 - 08.04		50	4	S90-4-25-038		S9, S11	91425038	139,7/5	95,3	M12x1,5	T	15
	04.94 - 08.04		60	4	S90-4-30-028		S9, S11	91430028	139,7/5	95,3	M12x1,5	T	15
SPORTAGE (JE_, KM_)													
	09.04 -		20	6	S90-6-10-005		S33	91610002	114,3/5	67	M12x1,5	T	16
	09.04 -		30	4	S90-4-15-002		S9	91415002	114,3/5	67	M12x1,5	T	16
	09.04 -		30	6	S90-6-15-027		S33	91615023	114,3/5	67	M12x1,5	T	16
	09.04 -		40	4	S90-4-20-001		S9	91420001	114,3/5	67	M12x1,5	T	16
	09.04 -		40	6	S90-6-20-028		S33	91620028	114,3/5	67	M12x1,5	T	16
	09.04 -		50	4	S90-4-25-016		S9	91425016	114,3/5	67	M12x1,5	T	16
	09.04 -		60	4	S90-4-30-015		S9	91430015	114,3/5	67	M12x1,5	T	16
SPORTAGE (SL)													
	09.09 -		20	6	S90-6-10-005		S33	91610002	114,3/5	67	M12x1,5	T	5
	09.09 -		30	4	S90-4-15-002		S9, S23	91415002	114,3/5	67	M12x1,5	T	5
	09.09 -		30	6	S90-6-15-027		S33	91615023	114,3/5	67	M12x1,5	T	5
	09.09 -		40	4	S90-4-20-001		S9, S23	91420001	114,3/5	67	M12x1,5	T	5
	09.09 -		40	6	S90-6-20-028		S33	91620028	114,3/5	67	M12x1,5	T	5
	09.09 -		50	4	S90-4-25-016		S9, S23	91425016	114,3/5	67	M12x1,5	T	5
	09.09 -		60	4	S90-4-30-015		S9, S23	91430015	114,3/5	67	M12x1,5	T	5
VENGA (YN)													
	02.10 -		20	6	S90-6-10-019		S33	91610002	114,3/5	67	M12x1,5	T	18
	02.10 -		30	6	S90-6-15-043		S33	91615023	114,3/5	67	M12x1,5	T	18
	02.10 -		30	4	S90-4-15-002		S9	91415002	114,3/5	67	M12x1,5	T	18
	02.10 -		40	4	S90-4-20-001		S9	91420001	114,3/5	67	M12x1,5	T	18
	02.10 -		40	6	S90-6-20-028		S33	91620028	114,3/5	67	M12x1,5	T	18
	02.10 -		50	4	S90-4-25-016		S9	91425016	114,3/5	67	M12x1,5	T	18
	02.10 -		60	4	S90-4-30-015		S9	91430015	114,3/5	67	M12x1,5	T	18
LANCIA													
DELTA III (844)													
	08.08 -	S1-1-12-25-22-17	10	1	S90-1-05-011		S11	91105011	98/4	58	M12x1,25	§21	
	08.08 -	M12x1,25x22, KG60°	20	2	S90-2-10-021			91210021	98/4	58	M12x1,25	§21	
	08.08 -		30	2	S90-2-15-020			91215020	98/4	58	M12x1,25	§21	
	08.08 -		40	7	S90-7-20-012			91720012	98/4	58	M12x1,25	§21	
	08.08 -		50	7	S90-7-25-006			91725006	98/4	58	M12x1,25	§21	
	08.08 -		60	7	S90-7-30-005			91730005	98/4	58	M12x1,25	§21	

Modell | *Model*	Baujahr | *Year*	Original-radschraube (nicht bestellbar) | *Original Bolt (not available)*	Spurweiten-änd. Achse | *Total track widening* (mm)	Eibach System	Artikel-Nr. silber | *Part-No. silver*	Artikel-Nr. schwarz | *Part-No. black*	Hinweise | *Notes*	Kennzeichnung | *Stamping*	Lochkreis | - Anzahl | *Bolt pattern* | *No. of holes*	Zentrierung | *Centre bore* (mm)	Gewinde | *Thread*	Gutachten | *Homologation*	ET-Grenze | *Offset frontier*
LANCIA													
Y (840A)													
	11.95 - 09.03	S1-1-12-25-40-19	10	1	S90-1-05-011		S11	91105011	98/4	58	M12x1,25	§21	
	11.95 - 09.03	M12x1,25x40, KG60°	30	2	S90-2-15-020			91215020	98/4	58	M12x1,25	§21	
	11.95 - 09.03		50	7	S90-7-25-006			91725006	98/4	58	M12x1,25	§21	
YPSILON (843)													
	10.03 - 12.11	S1-1-12-25-22-17	10	1	S90-1-05-011		S11	91105011	98/4	58	M12x1,25	§21	
	10.03 - 12.11	M12x1,25x22, KG60°	30	2	S90-2-15-020			91215020	98/4	58	M12x1,25	§21	
	10.03 - 12.11		50	7	S90-7-25-006			91725006	98/4	58	M12x1,25	§21	
	10.03 - 12.11		60	7	S90-7-30-005			91730005	98/4	58	M12x1,25	§21	
LAND ROVER													
DISCOVERY III (TAA)													
	07.04 - 09.09		50	4	S90-4-25-057		S9, S23, S72	91425057	120/5	72,5	M14x1,5	T	23
	07.04 - 09.09		60	4	S90-4-30-052		S9, S23, S72	91430052	120/5	72,5	M14x1,5	T	23
DISCOVERY IV (LA)													
	09.09 -		50	4	S90-4-25-057		S9, S23, S72	91425057	120/5	72,5	M14x1,5	T	23
	09.09 -		60	4	S90-4-30-052		S9, S23, S72	91430052	120/5	72,5	M14x1,5	T	23
FREELANDER 2 (FA_)													
	10.06 - 10.14		40	4	S90-4-20-022		S9, S23	91420022	108/5	63,3	M14x1,5	§21	
	10.06 - 10.14		50	4	S90-4-25-039		S9, S23	91425039	108/5	63,3	M14x1,5	§21	
	10.06 - 10.14		60	4	S90-4-30-029		S9, S23	91430029	108/5	63,3	M14x1,5	§21	
RANGE ROVER EVOQUE (LV)													
	06.11 -		40	4	S90-4-20-022		S9, S23	91420022	108/5	63,3	M14x1,5	T	15
	06.11 -		50	4	S90-4-25-039		S9, S23	91425039	108/5	63,3	M14x1,5	T	15
	06.11 -		60	4	S90-4-30-029		S9, S23	91430029	108/5	63,3	M14x1,5	T	15
RANGE ROVER III (LM)													
	03.02 - 08.12		50	4	S90-4-25-057		S9, S23, S72	91425057	120/5	72,5	M14x1,5	T	27
	03.02 - 08.12		60	4	S90-4-30-052		S9, S23, S72	91430052	120/5	72,5	M14x1,5	T	27
RANGE ROVER IV (LG)													
	08.12 -		40	4	S90-4-20-043		S9	91420043	120/5	72,5	M14x1,5	T	14,5
	08.12 -		50	4	S90-4-25-057		S9	91425057	120/5	72,5	M14x1,5	T	14,5
	08.12 -		60	4	S90-4-30-052		S9	91430052	120/5	72,5	M14x1,5	T	14,5
RANGE ROVER SPORT (LS)													
	02.05 - 03.13		50	4	S90-4-25-057		S9, S23, S72	91425057	120/5	72,5	M14x1,5	T	23
	02.05 - 03.13		60	4	S90-4-30-052		S9, S23, S72	91430052	120/5	72,5	M14x1,5	T	23
LEXUS													
GS (GRS19_, UZS19_, GWS19_)													
	04.05 - 11.11		30	4	S90-4-15-009		S9	91415009	114,3/5	60	M12x1,5	§21	
	04.05 - 11.11		30	6	S90-6-15-034		S33	91215022	114,3/5	60	M12x1,5	§21	
	04.05 - 11.11		40	4	S90-4-20-013		S9	91420013	114,3/5	60	M12x1,5	§21	
	04.05 - 11.11		50	4	S90-4-25-029		S9	91425029	114,3/5	60	M12x1,5	§21	
	04.05 - 11.11		60	4	S90-4-30-016		S9	91430016	114,3/5	60	M12x1,5	§21	
IS I (JCE1_, GXE1_)													
	04.99 - 07.05		30	4	S90-4-15-009		S9	91415009	114,3/5	60	M12x1,5	§21	
	04.99 - 07.05		30	6	S90-6-15-034		S33	91215022	114,3/5	60	M12x1,5	§21	
	04.99 - 07.05		40	4	S90-4-20-013		S9	91420013	114,3/5	60	M12x1,5	§21	
	04.99 - 07.05		50	4	S90-4-25-029		S9	91425029	114,3/5	60	M12x1,5	§21	
	04.99 - 07.05		60	4	S90-4-30-016		S9	91430016	114,3/5	60	M12x1,5	§21	
IS II (GSE2_, ALE2_, USE2_)													
	10.05 - 03.13		30	4	S90-4-15-009		S9	91415009	114,3/5	60	M12x1,5	§21	
	10.05 - 03.13		30	6	S90-6-15-034		S33	91215022	114,3/5	60	M12x1,5	§21	
	10.05 - 03.13		40	4	S90-4-20-013		S9	91420013	114,3/5	60	M12x1,5	§21	
	10.05 - 03.13		40	6	S90-6-20-031		S33	91220024	114,3/5	60	M12x1,5	§21	
	10.05 - 03.13		50	4	S90-4-25-029		S9	91425029	114,3/5	60	M12x1,5	§21	
	10.05 - 03.13		60	4	S90-4-30-016		S9	91430016	114,3/5	60	M12x1,5	§21	
MAZDA													
2 (DL, DJ)													
	11.14 -		30	6	S90-6-15-040		S33	91615010	100/4	54	M12x1,5		
	11.14 -		30	4	S90-4-15-015		S9	91415015	100/4	54	M12x1,5		
	11.14 -		40	6	S90-6-20-026		S33	91620026	100/4	54	M12x1,5		
	11.14 -		40	4	S90-4-20-011		S9	91420011	100/4	54	M12x1,5		
	11.14 -		60	4	S90-4-30-021		S9	91430021	100/4	54	M12x1,5		
2 Stufenheck (DJ)													
2 Saloon (DJ)	01.15 -		30	6	S90-6-15-040		S33	91615010	100/4	54	M12x1,5		
	01.15 -		30	4	S90-4-15-015		S9	91415015	100/4	54	M12x1,5		
	01.15 -		40	6	S90-6-20-026		S33	91620026	100/4	54	M12x1,5		
	01.15 -		40	4	S90-4-20-011		S9	91420011	100/4	54	M12x1,5		
	01.15 -		60	4	S90-4-30-021		S9	91430021	100/4	54	M12x1,5		
3 (BK)													
	10.03 - 12.09		10	5	S90-5-05-031		S11, S16, S33	91505027	114,3/5	67	M12x1,5	T	37,5
	10.03 - 12.09		20	6	S90-6-10-005		S16, S33	91610002	114,3/5	67	M12x1,5	T	37,5
	10.03 - 12.09		30	4	S90-4-15-002		S1, S23	91415002	114,3/5	67	M12x1,5	T	37,5
	10.03 - 12.09		30	6	S90-6-15-027		S16, S33	91615023	114,3/5	67	M12x1,5	T	37,5
	10.03 - 12.09		40	4	S90-4-20-001		S1, S23	91420001	114,3/5	67	M12x1,5	T	37,5
	10.03 - 12.09		50	4	S90-4-25-016		S1, S23	91425016	114,3/5	67	M12x1,5	T	37,5
3 (BL)													
	12.08 -		20	6	S90-6-10-005		S16, S33	91610002	114,3/5	67	M12x1,5	T	20
	12.08 -		30	4	S90-4-15-002		S1, S23	91415002	114,3/5	67	M12x1,5	T	20
	12.08 -		30	6	S90-6-15-027		S16, S33	91615023	114,3/5	67	M12x1,5	T	20
	12.08 -		40	4	S90-4-20-001		S1, S23	91420001	114,3/5	67	M12x1,5	T	20
	12.08 -		40	6	S90-6-20-028		S16, S33	91620028	114,3/5	67	M12x1,5	T	20
	12.08 -		50	4	S90-4-25-016		S1, S23	91425016	114,3/5	67	M12x1,5	T	20
	12.08 -		60	4	S90-4-30-015		S1, S23	91430015	114,3/5	67	M12x1,5	T	20
3 (BM)													
	09.13 -		20	6	S90-6-10-005		S16, S33	91610002	114,3/5	67	M12x1,5	T	20
	09.13 -		30	4	S90-4-15-002		S9	91415002	114,3/5	67	M12x1,5	T	20
	09.13 -		30	6	S90-6-15-027		S16, S33	91615023	114,3/5	67	M12x1,5	T	20
	09.13 -		40	4	S90-4-20-001		S9	91420001	114,3/5	67	M12x1,5	T	20
	09.13 -		40	6	S90-6-20-028		S16, S33	91620028	114,3/5	67	M12x1,5	T	20
	09.13 -		50	4	S90-4-25-016		S9	91425016	114,3/5	67	M12x1,5	T	20
	09.13 -		60	4	S90-4-30-015		S9	91430015	114,3/5	67	M12x1,5	T	20

Modell | *Model*	Baujahr | *Year*	Original-radschraube (nicht bestellbar) | *Original Bolt (not available)*	Spurweiten-änd. Achse | *Total track widening* (mm)	Eibach System	Artikel-Nr. silber | *Part-No. silver*	Artikel-Nr. schwarz | *Part-No. black*	Hinweise | *Notes*	Kennzeichnung | *Stamping*	Lochkreis | - Anzahl | *Bolt pattern* | *No. of holes*	Zentrierung | *Centre bore* (mm)	Gewinde | *Thread*	Gutachten | *Homologation*	ET-Grenze | *Offset frontier*
MAZDA													
3 Stufenheck (BK)													
3 Saloon (BK)	09.99 - 06.09		10	5	S90-5-05-031		S11, S16, S33	91505027	114,3/5	67	M12x1,5	T	37,5
	09.99 - 06.09		20	6	S90-6-10-005		S16, S33	91610002	114,3/5	67	M12x1,5	T	37,5
	09.99 - 06.09		30	4	S90-4-15-002		S1, S23	91415002	114,3/5	67	M12x1,5	T	37,5
	09.99 - 06.09		30	6	S90-6-15-027		S16, S33	91615023	114,3/5	67	M12x1,5	T	37,5
	09.99 - 06.09		40	4	S90-4-20-001		S1, S23	91420001	114,3/5	67	M12x1,5	T	37,5
	09.99 - 06.09		50	4	S90-4-25-016		S1, S23	91425016	114,3/5	67	M12x1,5	T	37,5
3 Stufenheck (BL)													
3 Saloon (BL)	12.08 -		20	6	S90-6-10-005		S16, S33	91610002	114,3/5	67	M12x1,5	T	20
	12.08 -		30	4	S90-4-15-002		S9	91415002	114,3/5	67	M12x1,5	T	20
	12.08 -		30	6	S90-6-15-027		S16, S33	91615023	114,3/5	67	M12x1,5	T	20
	12.08 -		40	4	S90-4-20-001		S9	91420001	114,3/5	67	M12x1,5	T	20
	12.08 -		40	6	S90-6-20-028		S16, S33	91620028	114,3/5	67	M12x1,5	T	20
	12.08 -		50	4	S90-4-25-016		S9	91425016	114,3/5	67	M12x1,5	T	20
	12.08 -		60	4	S90-4-30-015		S9	91430015	114,3/5	67	M12x1,5	T	20
3 Stufenheck (BM)													
3 Saloon (BM)	09.13 -		20	6	S90-6-10-005		S16, S33	91610002	114,3/5	67	M12x1,5	T	20
	09.13 -		30	4	S90-4-15-002		S1, S23	91415002	114,3/5	67	M12x1,5	T	20
	09.13 -		30	6	S90-6-15-027		S16, S33	91615023	114,3/5	67	M12x1,5	T	20
	09.13 -		40	4	S90-4-20-001		S1, S23	91420001	114,3/5	67	M12x1,5	T	20
	09.13 -		40	6	S90-6-20-028		S16, S33	91620028	114,3/5	67	M12x1,5	T	20
	09.13 -		50	4	S90-4-25-016		S1, S23	91425016	114,3/5	67	M12x1,5	T	20
	09.13 -		60	4	S90-4-30-015		S1, S23	91430015	114,3/5	67	M12x1,5	T	20
5 (CR19)													
	02.05 -		20	6	S90-6-10-005		S16, S33	91610002	114,3/5	67	M12x1,5	T	22,5
	02.05 -		30	6	S90-6-15-027		S16, S33	91615023	114,3/5	67	M12x1,5	T	22,5
	02.05 -		40	4	S90-4-20-001		S9	91420001	114,3/5	67	M12x1,5	T	22,5
	02.05 -		40	6	S90-6-20-028		S16, S33	91620028	114,3/5	67	M12x1,5	T	22,5
	02.05 -		50	4	S90-4-25-016		S9	91425016	114,3/5	67	M12x1,5	T	22,5
	02.05 -		60	4	S90-4-30-015		S9	91430015	114,3/5	67	M12x1,5	T	22,5
6 (GG)													
	06.02 - 06.05		10	5	S90-5-05-031		S11, S16, S33	91505027	114,3/5	67	M12x1,5	T	35
	06.02 - 06.05		20	6	S90-6-10-005		S3, S16, S33	91610002	114,3/5	67	M12x1,5	T	35
	06.02 - 06.05		30	4	S90-4-15-002		S1, S23	91415002	114,3/5	67	M12x1,5	T	35
	06.02 - 06.05		30	6	S90-6-15-027		S16, S33	91615023	114,3/5	67	M12x1,5	T	35
	06.02 - 06.05		40	4	S90-4-20-001		S1, S23	91420001	114,3/5	67	M12x1,5	T	35
	06.02 - 06.05		50	4	S90-4-25-016		S1, S23	91425016	114,3/5	67	M12x1,5	T	35
6 (GG)	03.05 - 08.07		20	6	S90-6-10-002		S3, S16, S33	91610002	114,3/5	67	M12x1,5	T	25
	03.05 - 08.07		30	6	S90-6-15-023		S16, S33	91615023	114,3/5	67	M12x1,5	T	25
	03.05 - 08.07		40	4	S90-4-20-024		S1, S23	91420001	114,3/5	67	M12x1,5	T	25
	03.05 - 08.07		40	6	S90-6-20-035		S1, S23	91620028	114,3/5	67	M12x1,5	T	25
	03.05 - 08.07		50	4	S90-4-25-041		S1, S23	91425016	114,3/5	67	M12x1,5	T	25
	03.05 - 08.07		60	4	S90-4-30-037		S1, S23	91430015	114,3/5	67	M12x1,5	T	25
6 (GH)													
	08.07 -		20	6	S90-6-10-002		S3, S16, S33	91610002	114,3/5	67	M12x1,5	T	20
	08.07 -		30	6	S90-6-15-023		S3, S16, S33	91615023	114,3/5	67	M12x1,5	T	20
	08.07 -		40	4	S90-4-20-024		S1, S23	91420001	114,3/5	67	M12x1,5	T	20
	08.07 -		40	6	S90-6-20-035		S16, S33	91620028	114,3/5	67	M12x1,5	T	20
	08.07 -		50	4	S90-4-25-041		S1, S23	91425016	114,3/5	67	M12x1,5	T	20
	08.07 -		60	4	S90-4-30-037		S1, S23	91430015	114,3/5	67	M12x1,5	T	20
6 Schrägheck (GG)													
6 Hatchback (GG)	08.02 - 06.05		10	5	S90-5-05-031		S11, S16, S33	91505027	114,3/5	67	M12x1,5	T	35
	08.02 - 06.05		20	6	S90-6-10-005		S3, S16, S33	91610002	114,3/5	67	M12x1,5	T	35
	08.02 - 06.05		30	4	S90-4-15-002		S1, S23	91415002	114,3/5	67	M12x1,5	T	35
	08.02 - 06.05		30	6	S90-6-15-027		S16, S33	91615023	114,3/5	67	M12x1,5	T	35
	08.02 - 06.05		40	4	S90-4-20-001		S1, S23	91420001	114,3/5	67	M12x1,5	T	35
	08.02 - 06.05		50	4	S90-4-25-016		S1, S23	91425016	114,3/5	67	M12x1,5	T	35
6 Schrägheck (GG)	03.05 - 12.07		20	6	S90-6-10-002		S3, S16, S33	91610002	114,3/5	67	M12x1,5	T	25
6 Hatchback (GG)	03.05 - 12.07		30	6	S90-6-15-023		S16, S33	91615023	114,3/5	67	M12x1,5	T	25
	03.05 - 12.07		40	4	S90-4-20-024		S1, S23	91420001	114,3/5	67	M12x1,5	T	25
	03.05 - 12.07		40	6	S90-6-20-035		S1, S23	91620028	114,3/5	67	M12x1,5	T	25
	03.05 - 12.07		50	4	S90-4-25-041		S1, S23	91425016	114,3/5	67	M12x1,5	T	25
	03.05 - 12.07		60	4	S90-4-30-037		S1, S23	91430015	114,3/5	67	M12x1,5	T	25
6 Kombi (GY)													
6 Station Wagon (GY)	08.02 - 06.05		10	5	S90-5-05-031		S11, S16, S33	91505027	114,3/5	67	M12x1,5	T	35
	08.02 - 06.05		20	6	S90-6-10-005		S3, S16, S33	91610002	114,3/5	67	M12x1,5	T	35
	08.02 - 06.05		30	4	S90-4-15-002		S1, S23	91415002	114,3/5	67	M12x1,5	T	35
	08.02 - 06.05		30	6	S90-6-15-027		S16, S33	91615023	114,3/5	67	M12x1,5	T	35
	08.02 - 06.05		40	4	S90-4-20-001		S1, S23	91420001	114,3/5	67	M12x1,5	T	35
	08.02 - 06.05		50	4	S90-4-25-016		S1, S23	91425016	114,3/5	67	M12x1,5	T	35
6 Kombi (GY)	03.05 - 12.07		20	6	S90-6-10-002		S3, S16, S33	91610002	114,3/5	67	M12x1,5	T	25
6 Station Wagon (GY)	03.05 - 12.07		30	6	S90-6-15-023		S16, S33	91615023	114,3/5	67	M12x1,5	T	25
	03.05 - 12.07		40	4	S90-4-20-024		S1, S23	91420001	114,3/5	67	M12x1,5	T	25
	03.05 - 12.07		40	6	S90-6-20-035		S1, S23	91620028	114,3/5	67	M12x1,5	T	25
	03.05 - 12.07		50	4	S90-4-25-041		S1, S23	91425016	114,3/5	67	M12x1,5	T	25
	03.05 - 12.07		60	4	S90-4-30-037		S1, S23	91430015	114,3/5	67	M12x1,5	T	25
6 Sport Kombi (GH)													
6 Station Wagon (GH)	02.08 -		20	6	S90-6-10-002		S3, S16, S33	91610002	114,3/5	67	M12x1,5	T	20
	02.08 -		30	6	S90-6-15-023		S3, S16, S33	91615023	114,3/5	67	M12x1,5	T	20
	02.08 -		40	4	S90-4-20-024		S1, S23	91420001	114,3/5	67	M12x1,5	T	20
	02.08 -		40	6	S90-6-20-035		S16, S33	91620028	114,3/5	67	M12x1,5	T	20
	02.08 -		50	4	S90-4-25-041		S1, S23	91425016	114,3/5	67	M12x1,5	T	20
	02.08 -		60	4	S90-4-30-037		S1, S23	91430015	114,3/5	67	M12x1,5	T	20

Modell | *Model*	Baujahr | *Year*	Original-radschraube (nicht bestellbar) | *Original Bolt (not available)*	Spurweiten-änd. Achse | *Total track widening* (mm)	Eibach System	Artikel-Nr. silber | *Part-No. silver*	Artikel-Nr. schwarz | *Part-No. black*	Hinweise | *Notes*	Kennzeichnung | *Stamping*	Lochkreis | - Anzahl | *Bolt pattern* | *No. of holes*	Zentrierung | *Centre bore* (mm)	Gewinde | *Thread*	Gutachten | *Homologation*	ET-Grenze | *Offset frontier*
MAZDA													
6 Kombi (GJ, GH)													
6 Station Wagon (GJ, GH)	12.12 -		20	6	S90-6-10-005		S16, S33	91610002	114,3/5	67	M12x1,5	T	20
	12.12 -		30	4	S90-4-15-018		S9	91415002	114,3/5	67	M12x1,5	T	20
	12.12 -		30	6	S90-6-15-027		S16, S33	91615023	114,3/5	67	M12x1,5	T	20
	12.12 -		40	4	S90-4-20-024		S9	91420001	114,3/5	67	M12x1,5	T	20
	12.12 -		40	6	S90-6-20-028		S16, S33	91620028	114,3/5	67	M12x1,5	T	20
	12.12 -		50	4	S90-4-25-041		S9	91425016	114,3/5	67	M12x1,5	T	20
	12.12 -		60	4	S90-4-30-037		S9	91430015	114,3/5	67	M12x1,5	T	20
6 Sport (GH)													
6 Hatchback (GH)	08.07 -		20	6	S90-6-10-002		S3, S16, S33	91610002	114,3/5	67	M12x1,5	T	20
	08.07 -		30	6	S90-6-15-023		S3, S16, S33	91615023	114,3/5	67	M12x1,5	T	20
	08.07 -		40	4	S90-4-20-024		S1, S23	91420001	114,3/5	67	M12x1,5	T	20
	08.07 -		40	6	S90-6-20-035		S16, S33	91620028	114,3/5	67	M12x1,5	T	20
	08.07 -		50	4	S90-4-25-041		S1, S23	91425016	114,3/5	67	M12x1,5	T	20
	08.07 -		60	4	S90-4-30-037		S1, S23	91430015	114,3/5	67	M12x1,5	T	20
6 Stufenheck (GJ, GH)													
6 Hatchback (GJ, GH)	12.12 -		20	6	S90-6-10-005		S16, S33	91610002	114,3/5	67	M12x1,5	T	20
	12.12 -		30	4	S90-4-15-018		S9	91415002	114,3/5	67	M12x1,5	T	20
	12.12 -		30	6	S90-6-15-027		S16, S33	91615023	114,3/5	67	M12x1,5	T	20
	12.12 -		40	4	S90-4-20-024		S9	91420001	114,3/5	67	M12x1,5	T	20
	12.12 -		40	6	S90-6-20-028		S16, S33	91620028	114,3/5	67	M12x1,5	T	20
	12.12 -		50	4	S90-4-25-041		S9	91425016	114,3/5	67	M12x1,5	T	20
	12.12 -		60	4	S90-4-30-037		S9	91430015	114,3/5	67	M12x1,5	T	20
323 C IV (BG)													
	06.89 - 09.00		10	5	S90-5-05-008		S16, S33	91505008	100/4	54	M12x1,5	§21	
	06.89 - 09.00		30	6	S90-6-15-010		S16, S33	91615010	100/4	54	M12x1,5	§21	
	06.89 - 09.00		40	4	S90-4-20-011		S9, S23	91420011	100/4	54	M12x1,5	§21	
323 C V (BA)													
	08.94 - 09.00		10	5	S90-5-05-008		S16, S33	91505008	100/4	54	M12x1,5	§21	
	08.94 - 09.00		30	6	S90-6-15-010		S16, S33	91615010	100/4	54	M12x1,5	§21	
	08.94 - 09.00		40	4	S90-4-20-011		S9, S23	91420011	100/4	54	M12x1,5	§21	
323 F IV (BG)													
	04.87 - 10.94		10	5	S90-5-05-008		S16, S33	91505008	100/4	54	M12x1,5	§21	
	04.87 - 10.94		30	6	S90-6-15-010		S16, S33	91615010	100/4	54	M12x1,5	§21	
	04.87 - 10.94		40	4	S90-4-20-011		S9, S23	91420011	100/4	54	M12x1,5	§21	
323 F V (BA)													
	07.94 - 09.98		10	5	S90-5-05-008		S16, S33	91505008	100/4	54	M12x1,5	§21	
	07.94 - 09.98		30	6	S90-6-15-010		S16, S33	91615010	100/4	54	M12x1,5	§21	
	07.94 - 09.98		40	4	S90-4-20-011		S9, S23	91420011	100/4	54	M12x1,5	§21	
323 F VI (BJ)													
	09.98 - 05.04		10	5	S90-5-05-008		S16, S33	91505008	100/4	54	M12x1,5	T	30
	09.98 - 05.04		30	6	S90-6-15-010		S16, S33	91615010	100/4	54	M12x1,5	T	30
323 P V (BA)													
	10.96 - 09.98		10	5	S90-5-05-008		S16, S33	91505008	100/4	54	M12x1,5	§21	
	10.96 - 09.98		30	6	S90-6-15-010		S16, S33	91615010	100/4	54	M12x1,5	§21	
	10.96 - 09.98		40	4	S90-4-20-011		S9, S23	91420011	100/4	54	M12x1,5	§21	
323 S IV (BG)													
	06.89 - 10.94		10	5	S90-5-05-008		S16, S33	91505008	100/4	54	M12x1,5	§21	
	06.89 - 10.94		30	6	S90-6-15-010		S16, S33	91615010	100/4	54	M12x1,5	§21	
	06.89 - 10.94		40	4	S90-4-20-011		S9, S23	91420011	100/4	54	M12x1,5	§21	
323 S V (BA)													
	05.94 - 09.00		10	5	S90-5-05-008		S16, S33	91505008	100/4	54	M12x1,5	§21	
	05.94 - 09.00		30	6	S90-6-15-010		S16, S33	91615010	100/4	54	M12x1,5	§21	
	05.94 - 09.00		40	4	S90-4-20-011		S9, S23	91420011	100/4	54	M12x1,5	§21	
323 S VI (BJ)													
	05.98 - 05.04		10	5	S90-5-05-008		S16, S33	91505008	100/4	54	M12x1,5	T	30
	05.98 - 05.04		30	6	S90-6-15-010		S16, S33	91615010	100/4	54	M12x1,5	T	30
B-SERIE (UN)													
	11.98 - 11.06		50	8	S90-8-25-002		S9, S11	91825002	139,7/6	106,5	M12x1,5	T	5
	11.98 - 11.06		60	8	S90-8-30-002		S9, S11	91830002	139,7/6	106,5	M12x1,5	T	5
B-SERIE Pritsche/ Fahrgestell (UN)													
B-SERIE Platform/Chassis (UN)	11.98 - 11.06		50	8	S90-8-25-002		S9, S11	91825002	139,7/6	106,5	M12x1,5	T	5
	11.98 - 11.06		60	8	S90-8-30-002		S9, S11	91830002	139,7/6	106,5	M12x1,5	T	5
CX-3 (DK)													
	01.15 -		20	6	S90-6-10-019		S16, S33	91610002	114,3/5	67	M12x1,5	T	20
	01.15 -		30	6	S90-6-15-043		S16, S33	91615023	114,3/5	67	M12x1,5	T	20
	01.15 -		40	6	S90-6-20-028		S16, S33	91615023	114,3/5	67	M12x1,5	T	20
	01.15 -		30	4	S90-4-15-018		S9	91415002	114,3/5	67	M12x1,5	T	20
	01.15 -		40	4	S90-4-20-024		S9	91420001	114,3/5	67	M12x1,5	T	20
	01.15 -		50	4	S90-4-25-041		S9	91425016	114,3/5	67	M12x1,5	T	20
	01.15 -		60	4	S90-4-30-032		S9	91430015	114,3/5	67	M12x1,5	T	20
CX-5 (KE, GH)													
	11.11 -		20	6	S90-6-10-005		S16, S33	91610002	114,3/5	67	M12x1,5	T	20
	11.11 -		30	4	S90-4-15-018		S9	91415002	114,3/5	67	M12x1,5	T	20
	11.11 -		30	6	S90-6-15-027		S16, S33	91615023	114,3/5	67	M12x1,5	T	20
	11.11 -		40	4	S90-4-20-024		S9	91420001	114,3/5	67	M12x1,5	T	20
	11.11 -		50	4	S90-4-25-041		S9	91425016	114,3/5	67	M12x1,5	T	20
	11.11 -		60	4	S90-4-30-032		S9	91430015	114,3/5	67	M12x1,5	T	20
MX-5 I (NA)													
	09.89 - 04.98		10	5	S90-5-05-008		S16, S33	91505008	100/4	54	M12x1,5	T	5
	09.89 - 04.98		30	6	S90-6-15-010		S16, S33	91615010	100/4	54	M12x1,5	T	5
	09.89 - 04.98		40	4	S90-4-20-011		S9	91420011	100/4	54	M12x1,5	T	5
	09.89 - 04.98		60	4	S90-4-30-021		S9	91430021	100/4	54	M12x1,5	T	5
MX-5 II (NB)													
	01.98 - 10.05		10	5	S90-5-05-008		S16, S24, S33	91505008	100/4	54	M12x1,5	T	5
	01.98 - 10.05		30	6	S90-6-15-010		S16, S24, S33	91615010	100/4	54	M12x1,5	T	5
	01.98 - 10.05		40	4	S90-4-20-011		S9	91420011	100/4	54	M12x1,5	T	5
	01.98 - 10.05		60	4	S90-4-30-021		S9	91430021	100/4	54	M12x1,5	T	5
MX-5 III (NC)													
	03.05 -		20	6	S90-6-10-019		S16, S33	91610002	114,3/5	67	M12x1,5	T	25
	03.05 -		30	6	S90-6-15-043		S16, S33	91615023	114,3/5	67	M12x1,5	T	25
	03.05 -		40	4	S90-4-20-001		S9	91420001	114,3/5	67	M12x1,5	T	25
	03.05 -		40	6	S90-6-20-028		S16, S33	91620028	114,3/5	67	M12x1,5	T	25
	03.05 -		50	4	S90-4-25-016		S9	91425016	114,3/5	67	M12x1,5	T	25
	03.05 -		60	4	S90-4-30-015		S9	91430015	114,3/5	67	M12x1,5	T	25

Modell | *Model*	Baujahr | *Year*	Original-radschraube (nicht bestellbar) | *Original Bolt (not available)*	Spurweiten-änd. Achse | *Total track widening* (mm)	Eibach System	Artikel-Nr. silber | *Part-No. silver*	Artikel-Nr. schwarz | *Part-No. black*	Hinweise | *Notes*	Kennzeichnung | *Stamping*	Lochkreis | - Anzahl | *Bolt pattern* | *No. of holes*	Zentrierung | *Centre bore* (mm)	Gewinde | *Thread*	Gutachten | *Homologation*	ET-Grenze | *Offset frontier*
MAZDA													
MX-5 IV (ND)													
	04.15 -		30	6	S90-6-15-040		S33	91615010	100/4	54	M12x1,5	T	
	04.15 -		30	4	S90-4-15-015		S9	91415015	100/4	54	M12x1,5	T	
	04.15 -		40	6	S90-6-20-026		S33	91620026	100/4	54	M12x1,5	T	
	04.15 -		40	4	S90-4-20-011		S9	91420011	100/4	54	M12x1,5	T	
	04.15 -		60	4	S90-4-30-021		S9	91430021	100/4	54	M12x1,5	T	
RX 8 (SE17)													
	10.03 - 06.12		10	5	S90-5-05-031		S11, S16, S33	91505027	114,3/5	67	M12x1,5	T	20
	10.03 - 06.12		20	6	S90-6-10-005		S16, S33	91610002	114,3/5	67	M12x1,5	T	20
	10.03 - 06.12		30	4	S90-4-15-002		S1, S6, S23	91415002	114,3/5	67	M12x1,5	T	20
	10.03 - 06.12		30	6	S90-6-15-027		S16, S33	91615023	114,3/5	67	M12x1,5	T	20
	10.03 - 06.12		40	4	S90-4-20-001		S1, S23	91420001	114,3/5	67	M12x1,5	T	20
	10.03 - 06.12		50	4	S90-4-25-016		S1, S23	91425016	114,3/5	67	M12x1,5	T	20
	10.03 - 06.12		60	4	S90-4-30-015		S9	91430015	114,3/5	67	M12x1,5	T	20
TRIBUTE (EP)													
	03.00 - 05.08		30	4	S90-4-15-002		S9, S47	91415002	114,3/5	67	M12x1,5	T	20
	03.00 - 05.08		40	4	S90-4-20-001		S9, S47	91420001	114,3/5	67	M12x1,5	T	20
	03.00 - 05.08		50	4	S90-4-25-016		S9, S47	91425016	114,3/5	67	M12x1,5	T	20
MERCEDES-BENZ													
190 (W201)													
	10.82 - 08.93	S1-5-12-50-40-17	10	1	S90-1-05-014		S11, S57	91105014	112/5	66,45	M12x1,5	§21	
	10.82 - 08.93	M12x1,5x40, KU r=12	30	2	S90-2-15-017	S90-2-15-017-B	S51, S57	91215017	112/5	66,45	M12x1,5	§21	
	10.82 - 08.93		40	2	S90-2-20-007	S90-2-20-007-B	S52, S57	91220007	112/5	66,45	M12x1,5	§21	
	10.82 - 08.93		50	7	S90-7-25-009		S6	91725009	112/5	66,45	M12x1,5	§21	
	10.82 - 08.93		60	7	S90-7-30-001		S6	91730001	112/5	66,45	M12x1,5	§21	
A-KLASSE (W168)													
A-CLASS (W168)	07.97 - 08.04	S1-5-12-50-40-17	10	1	S90-1-05-014		S50, S57	91105014	112/5	66,45	M12x1,5	T	29
	07.97 - 08.04	M12x1,5x40, KU r=12	20	2	S90-2-10-002	S90-2-10-002-B	S48, S57	91210002	112/5	66,45	M12x1,5	T	29
	07.97 - 08.04		30	2	S90-2-15-017	S90-2-15-017-B	S51, S57	91215017	112/5	66,45	M12x1,5	T	29
	07.97 - 08.04		50	7	S90-7-25-009		S15	91725009	112/5	66,45	M12x1,5	T	29
	07.97 - 08.04		60	7	S90-7-30-001		S15	91730001	112/5	66,45	M12x1,5	T	29
A-KLASSE (W169)													
A-CLASS (W169)	09.04 - 06.12	S1-7-14-50-27-17	20	2	S90-2-10-002	S90-2-10-002-B	S48, S57	91210002	112/5	66,45	M14x1,5	T	14
	09.04 - 06.12	M14x1,5x27, KU r=14	24	2	S90-2-12-004	S90-2-12-004-B	S50, S57	91212004	112/5	66,45	M14x1,5	T	14
	09.04 - 06.12		30	2	S90-2-15-017	S90-2-15-017-B	S51, S57	91215017	112/5	66,45	M14x1,5	T	14
	09.04 - 06.12		40	2	S90-2-20-007	S90-2-20-007-B	S52, S57	91220007	112/5	66,45	M14x1,5	T	14
	09.04 - 06.12		40	7	S90-7-20-016	S90-7-20-016-B		91720016	112/5	66,45	M14x1,5	T	14
	09.04 - 06.12		50	7	S90-7-25-016			91725016	112/5	66,45	M14x1,5	T	14
	09.04 - 06.12		60	7	S90-7-30-007			91730007	112/5	66,45	M14x1,5	T	14
A-KLASSE (W176)													
A-CLASS (W176)	06.12 -	S1-7-14-50-27-17	10	1	S90-1-05-036		S57, S78	91105014	112/5	66,45	M14x1,5	T	17
	06.12 -	M14x1,5x27, KU r=14	20	2	S90-2-10-002	S90-2-10-002-B	S48, S57	91210002	112/5	66,45	M14x1,5	T	17
	06.12 -		24	2	S90-2-12-004	S90-2-12-004-B	S50, S57	91212004	112/5	66,45	M14x1,5	T	17
	06.12 -		30	2	S90-2-15-017	S90-2-15-017-B	S51, S57	91215017	112/5	66,45	M14x1,5	T	17
	06.12 -		40	2	S90-2-20-007	S90-2-20-007-B	S52, S57	91220007	112/5	66,45	M14x1,5	T	17
	06.12 -		40	7	S90-7-20-016	S90-7-20-016-B	S45	91720016	112/5	66,45	M14x1,5	T	17
	06.12 -		50	7	S90-7-25-016			91725016	112/5	66,45	M14x1,5	T	17
	06.12 -		60	7	S90-7-30-007			91730007	112/5	66,45	M14x1,5	T	17
B-KLASSE (W245)													
B-CLASS (W245)	03.05 - 11.11	S1-7-14-50-27-17	10	1	S90-1-05-014		S11, S57	91105014	112/5	66,45	M14x1,5	T	16
	03.05 - 11.11	M14x1,5x27, KU r=14	24	2	S90-2-12-004	S90-2-12-004-B	S50, S57	91212004	112/5	66,45	M14x1,5	T	16
	03.05 - 11.11		30	2	S90-2-15-017	S90-2-15-017-B	S51, S57	91215017	112/5	66,45	M14x1,5	T	16
	03.05 - 11.11		40	2	S90-2-20-007	S90-2-20-007-B	S52, S57	91220007	112/5	66,45	M14x1,5	T	16
	03.05 - 11.11		40	7	S90-7-20-016	S90-7-20-016-B		91720016	112/5	66,45	M14x1,5	T	16
	03.05 - 11.11		50	7	S90-7-25-016			91725016	112/5	66,45	M14x1,5	T	16
	03.05 - 11.11		60	7	S90-7-30-007			91730007	112/5	66,45	M14x1,5	T	16
B-KLASSE (W246, W242)													
B-CLASS (W246, W242)	11.11 -	S1-7-14-50-27-17	24	2	S90-2-12-004	S90-2-12-004-B	S50, S57	91212004	112/5	66,45	M14x1,5	T	17
	11.11 -	M14x1,5x27, KU r=14	30	2	S90-2-15-017	S90-2-15-017-B	S51, S57	91215017	112/5	66,45	M14x1,5	T	17
	11.11 -		40	2	S90-2-20-007	S90-2-20-007-B	S52, S57	91220007	112/5	66,45	M14x1,5	T	17
	11.11 -		40	7	S90-7-20-016	S90-7-20-016-B	S45	91720016	112/5	66,45	M14x1,5	T	17
	11.11 -		50	7	S90-7-25-016			91725016	112/5	66,45	M14x1,5	T	17
	11.11 -		60	7	S90-7-30-007			91730007	112/5	66,45	M14x1,5	T	17
C-KLASSE (W202)													
C-CLASS (W202)	03.93 - 05.00	S1-5-12-50-40-17	10	1	S90-1-05-014		S11, S57	91105014	112/5	66,45	M12x1,5	T	15
	03.93 - 05.00	M12x1,5x40, KU r=12	20	2	S90-2-10-002	S90-2-10-002-B	S48, S57	91210002	112/5	66,45	M12x1,5	T	15
	03.93 - 05.00		30	2	S90-2-15-017	S90-2-15-017-B	S51, S57	91215017	112/5	66,45	M12x1,5	T	15
	03.93 - 05.00		40	2	S90-2-20-007	S90-2-20-007-B	S52, S57	91220007	112/5	66,45	M12x1,5	T	15
	03.93 - 05.00		50	7	S90-7-25-009		S6, S15	91725009	112/5	66,45	M12x1,5	T	15
	03.93 - 05.00		60	7	S90-7-30-001		S6, S15	91730001	112/5	66,45	M12x1,5	T	15
C-KLASSE (W203)													
C-CLASS (W203)	05.00 - 08.07	S1-5-12-50-40-17	10	1	S90-1-05-014		S11, S57	91105014	112/5	66,45	M12x1,5	T	2
	05.00 - 08.07	M12x1,5x40, KU r=12	20	2	S90-2-10-002	S90-2-10-002-B	S48, S57	91210002	112/5	66,45	M12x1,5	T	2
	05.00 - 08.07		30	2	S90-2-15-017	S90-2-15-017-B	S51, S57	91215017	112/5	66,45	M12x1,5	T	2
	05.00 - 08.07		40	2	S90-2-20-007	S90-2-20-007-B	S52, S57	91220007	112/5	66,45	M12x1,5	T	2
	05.00 - 08.07		50	7	S90-7-25-009		S6, S15	91725009	112/5	66,45	M12x1,5	T	2
	05.00 - 08.07		60	7	S90-7-30-001		S6, S17	91730001	112/5	66,45	M12x1,5	T	2
C-KLASSE (W204)													
C-CLASS (W204)	01.07 -	S1-7-14-50-27-17	20	2	S90-2-10-002	S90-2-10-002-B	S57	91210002	112/5	66,45	M14x1,5	T	6
	01.07 -	M14x1,5x27, KU r=14	24	2	S90-2-12-004	S90-2-12-004-B	S57	91212004	112/5	66,45	M14x1,5	T	6
	01.07 -		30	2	S90-2-15-017	S90-2-15-017-B	S57	91215017	112/5	66,45	M14x1,5	T	6
	01.07 -		40	2	S90-2-20-007	S90-2-20-007-B	S57	91220007	112/5	66,45	M14x1,5	T	6
	01.07 -		40	7	S90-7-20-016	S90-7-20-016-B		91720016	112/5	66,45	M14x1,5	T	6
	01.07 -		50	7	S90-7-25-016			91725016	112/5	66,45	M14x1,5	T	6
	01.07 -		60	7	S90-7-30-007			91730007	112/5	66,45	M14x1,5	T	6
C-KLASSE (W205)													
C-CLASS (W205)	12.13 -	S1-7-14-50-27-17 M14x1,5x27, KU r=14	24	2	S90-2-12-004	S90-2-12-004-B	S49, S53, S57	91212004	112/5	66,45	M14x1,5	T	23
	12.13 -		30	2	S90-2-15-017	S90-2-15-017-B	S49, S53, S57	91215017	112/5	66,45	M14x1,5	T	23
	12.13 -		40	2	S90-2-20-007	S90-2-20-007-B	S49, S53, S57	91220007	112/5	66,45	M14x1,5	T	23
	12.13 -		40	7	S90-7-20-016	S90-7-20-016-B	S45	91720016	112/5	66,45	M14x1,5	T	23
	12.13 -		50	7	S90-7-25-016			91725016	112/5	66,45	M14x1,5	T	23
	12.13 -		60	7	S90-7-30-007			91730007	112/5	66,45	M14x1,5	T	23

Modell | *Model*	Baujahr | *Year*	Original-radschraube (nicht bestellbar) | *Original Bolt (not available)*	Spurweiten-änd. Achse | *Total track widening* (mm)	Eibach System	Artikel-Nr. silber | *Part-No. silver*	Artikel-Nr. schwarz | *Part-No. black*	Hinweise | *Notes*	Kennzeichnung | *Stamping*	Lochkreis | - Anzahl | *Bolt pattern* | *No. of holes*	Zentrierung | *Centre bore* (mm)	Gewinde | *Thread*	Gutachten | *Homologation*	ET-Grenze | *Offset frontier*
MERCEDES-BENZ													
C-KLASSE Coupe (CL203)													
C-CLASS Coupe (CL203)	03.01 - 06.11	S1-5-12-50-40-17	20	2	S90-2-10-002	S90-2-10-002-B	S48, S57	91210002	112/5	66,45	M12x1,5	T	1
	03.01 - 06.11	M12x1,5x40, KU r=12	30	2	S90-2-15-017	S90-2-15-017-B	S51, S57	91215017	112/5	66,45	M12x1,5	T	1
	03.01 - 06.11		40	2	S90-2-20-007	S90-2-20-007-B	S52, S57	91220007	112/5	66,45	M12x1,5	T	1
	03.01 - 06.11		50	7	S90-7-25-009		S6, S15	91725009	112/5	66,45	M12x1,5	T	1
	03.01 - 06.11		60	7	S90-7-30-001		S6, S17	91730001	112/5	66,45	M12x1,5	T	1
C-KLASSE Coupe (C204)													
C-CLASS Coupe (C204)	06.11 -	S1-7-14-50-27-17	20	2	S90-2-10-002	S90-2-10-002-B	S57	91210002	112/5	66,45	M14x1,5	T	6
	06.11 -	M14x1,5x27, KU r=14	24	2	S90-2-12-004	S90-2-12-004-B	S57	91212004	112/5	66,45	M14x1,5	T	6
	06.11 -		30	2	S90-2-15-017	S90-2-15-017-B	S57	91215017	112/5	66,45	M14x1,5	T	6
	06.11 -		40	2	S90-2-20-007	S90-2-20-007-B	S57	91220007	112/5	66,45	M14x1,5	T	6
	06.11 -		40	7	S90-7-20-016	S90-7-20-016-B		91720016	112/5	66,45	M14x1,5	T	6
	06.11 -		50	7	S90-7-25-016			91725016	112/5	66,45	M14x1,5	T	6
	06.11 -		60	7	S90-7-30-007			91730007	112/5	66,45	M14x1,5	T	6
C-KLASSE Kombi (S202)													
C-CLASS Estate (S202)	06.96 - 03.01	S1-5-12-50-40-17	10	1	S90-1-05-014								
	06.96 - 03.01	M12x1,5x40, KU r=12	20	2	S90-2-10-002	S90-2-10-002-B	S11, S57	91105014	112/5	66,45	M12x1,5	T	15
	06.96 - 03.01		30	2	S90-2-15-017	S90-2-15-017-B	S48, S57	91210002	112/5	66,45	M12x1,5	T	15
	06.96 - 03.01		40	2	S90-2-20-007	S90-2-20-007-B	S51, S57	91215017	112/5	66,45	M12x1,5	T	15
	06.96 - 03.01		50	7	S90-7-25-009		S52, S57	91220007	112/5	66,45	M12x1,5	T	15
	06.96 - 03.01		60	7	S90-7-30-001		S6, S15	91725009	112/5	66,45	M12x1,5	T	15
C-KLASSE Kombi (S203)							S6, S15	91730001	112/5	66,45	M12x1,5	T	15
C-CLASS T-Model (S203)	03.01 - 08.07	S1-5-12-50-40-17	10	1	S90-1-05-014								
	03.01 - 08.07	M12x1,5x40, KU r=12	20	2	S90-2-10-002	S90-2-10-002-B	S11, S57	91105014	112/5	66,45	M12x1,5	T	2
	03.01 - 08.07		30	2	S90-2-15-017	S90-2-15-017-B	S48, S57	91210002	112/5	66,45	M12x1,5	T	2
	03.01 - 08.07		40	2	S90-2-20-007	S90-2-20-007-B	S51, S57	91215017	112/5	66,45	M12x1,5	T	2
	03.01 - 08.07		50	7	S90-7-25-009		S52, S57	91220007	112/5	66,45	M12x1,5	T	2
	03.01 - 08.07		60	7	S90-7-30-001		S6, S15	91725009	112/5	66,45	M12x1,5	T	2
C-KLASSE Kombi (S204)							S6, S17	91730001	112/5	66,45	M12x1,5	T	2
C-CLASS T-Model (S204)	08.07 -	S1-7-14-50-27-17	20	2	S90-2-10-002	S90-2-10-002-B	S57	91210002	112/5	66,45	M14x1,5	T	6
	08.07 -	M14x1,5x27, KU r=14	24	2	S90-2-12-004	S90-2-12-004-B	S57	91212004	112/5	66,45	M14x1,5	T	6
	08.07 -		30	2	S90-2-15-017	S90-2-15-017-B	S57	91215017	112/5	66,45	M14x1,5	T	6
	08.07 -		40	2	S90-2-20-007	S90-2-20-007-B	S57	91220007	112/5	66,45	M14x1,5	T	6
	08.07 -		40	7	S90-7-20-016	S90-7-20-016-B		91720016	112/5	66,45	M14x1,5	T	6
	08.07 -		50	7	S90-7-25-016			91725016	112/5	66,45	M14x1,5	T	6
	08.07 -		60	7	S90-7-30-007			91730007	112/5	66,45	M14x1,5	T	6
C-CLASS Kombi (S205)													
C-CLASS Estate (S205)	09.14 -	S1-7-14-50-27-17	24	2	S90-2-12-004	S90-2-12-004-B	S49, S53, S57	91212004	112/5	66,45	M14x1,5	T	23
	09.14 -	M14x1,5x27, KU r=14	30	2	S90-2-15-017	S90-2-15-017-B	S49, S53, S57	91215017	112/5	66,45	M14x1,5	T	23
	09.14 -		40	2	S90-2-20-007	S90-2-20-007-B	S49, S53, S57	91220007	112/5	66,45	M14x1,5	T	23
	09.14 -		40	7	S90-7-20-016	S90-7-20-016-B	S45	91720016	112/5	66,45	M14x1,5	T	23
	09.14 -		50	7	S90-7-25-016			91725016	112/5	66,45	M14x1,5	T	23
	09.14 -		60	7	S90-7-30-007			91730007	112/5	66,45	M14x1,5	T	23
Cabriolet (A124)													
Convertible (A124)	09.91 - 06.93	S1-5-12-50-30-17	10	1	S90-1-05-014		S11, S57	91105014	112/5	66,45	M12x1,5	T	20
	09.91 - 06.93	M12x1,5x30, KU r=12	30	2	S90-2-15-017	S90-2-15-017-B	S51, S57	91215017	112/5	66,45	M12x1,5	T	20
	09.91 - 06.93		40	2	S90-2-20-007	S90-2-20-007-B	S52, S57	91220007	112/5	66,45	M12x1,5	§21	
	09.91 - 06.93		50	7	S90-7-25-009		S6	91725009	112/5	66,45	M12x1,5	§21	
	09.91 - 06.93		60	7	S90-7-30-001		S6	91730001	112/5	66,45	M12x1,5	§21	
CLA Coupe (C117)													
	01.13 -	S1-7-14-50-27-17	24	2	S90-2-12-004	S90-2-12-004-B	S50, S57	91212004	112/5	66,45	M14x1,5	T	19
	01.13 -	M14x1,5x27, KU r=14	30	2	S90-2-15-017	S90-2-15-017-B	S51, S57	91215017	112/5	66,45	M14x1,5	T	19
	01.13 -		40	2	S90-2-20-007	S90-2-20-007-B	S52, S57	91220007	112/5	66,45	M14x1,5	T	19
	01.13 -		40	7	S90-7-20-016	S90-7-20-016-B	S45	91720016	112/5	66,45	M14x1,5	T	19
	01.13 -		50	7	S90-7-25-016			91725016	112/5	66,45	M14x1,5	T	19
	01.13 -		60	7	S90-7-30-007			91730007	112/5	66,45	M14x1,5	T	19
CLC-KLASSE (CL203)													
CLC-CLASS (CL203)	05.08 - 06.11	S1-5-12-50-40-17	20	2	S90-2-10-002	S90-2-10-002-B	S48, S57	91210002	112/5	66,45	M12x1,5	T	1
	05.08 - 06.11	M12x1,5x40, KU r=12	30	2	S90-2-15-017	S90-2-15-017-B	S51, S57	91215017	112/5	66,45	M12x1,5	T	1
	05.08 - 06.11		40	2	S90-2-20-007	S90-2-20-007-B	S52, S57	91220007	112/5	66,45	M12x1,5	T	1
	05.08 - 06.11		50	7	S90-7-25-009		S6, S15	91725009	112/5	66,45	M12x1,5	T	1
	05.08 - 06.11		60	7	S90-7-30-001		S6, S17	91730001	112/5	66,45	M12x1,5	T	1
CLK (C208)													
	06.97 - 09.02	S1-5-12-50-40-17	10	1	S90-1-05-014		S11, S57	91105014	112/5	66,45	M12x1,5	T	15
	06.97 - 09.02	M12x1,5x40, KU r=12	30	2	S90-2-15-017	S90-2-15-017-B	S51, S57	91215017	112/5	66,45	M12x1,5	T	15
	06.97 - 09.02		40	2	S90-2-20-007	S90-2-20-007-B	S52, S57	91220007	112/5	66,45	M12x1,5	T	15
	06.97 - 09.02		50	7	S90-7-25-009		S6, S15	91725009	112/5	66,45	M12x1,5	T	15
	06.97 - 09.02		60	7	S90-7-30-001		S6, S15	91730001	112/5	66,45	M12x1,5	T	15
CLK (C209)													
	06.02 - 05.09	S1-5-12-50-40-17	30	2	S90-2-15-017	S90-2-15-017-B	S51, S57	91215017	112/5	66,45	M12x1,5	T	15
	06.02 - 05.09	M12x1,5x40, KU r=12	40	2	S90-2-20-007	S90-2-20-007-B	S52, S57	91220007	112/5	66,45	M12x1,5	T	15
	06.02 - 05.09		50	7	S90-7-25-009		S6, S15	91725009	112/5	66,45	M12x1,5	T	15
	06.02 - 05.09		60	7	S90-7-30-001		S6, S15	91730001	112/5	66,45	M12x1,5	T	15
CLK Cabriolet (A208)													
CLK Convertible (A208)	03.98 - 03.02	S1-5-12-50-40-17	10	1	S90-1-05-014		S11, S57	91105014	112/5	66,45	M12x1,5	T	15
	03.98 - 03.02	M12x1,5x40, KU r=12	30	2	S90-2-15-017	S90-2-15-017-B	S51, S57	91215017	112/5	66,45	M12x1,5	T	15
	03.98 - 03.02		40	2	S90-2-20-007	S90-2-20-007-B	S52, S57	91220007	112/5	66,45	M12x1,5	T	15
	03.98 - 03.02		50	7	S90-7-25-009		S6, S15	91725009	112/5	66,45	M12x1,5	T	15
	03.98 - 03.02		60	7	S90-7-30-001		S6, S15	91730001	112/5	66,45	M12x1,5	T	15
CLK Cabriolet (A209)													
CLK Convertible (A209)	02.03 - 03.10	S1-5-12-50-40-17	30	2	S90-2-15-017	S90-2-15-017-B	S51, S57	91215017	112/5	66,45	M12x1,5	T	15
	02.03 - 03.10	M12x1,5x40, KU r=12	40	2	S90-2-20-007	S90-2-20-007-B	S52, S57	91220007	112/5	66,45	M12x1,5	T	15
	02.03 - 03.10		50	7	S90-7-25-009		S6, S15	91725009	112/5	66,45	M12x1,5	T	15
	02.03 - 03.10		60	7	S90-7-30-001		S6, S15	91730001	112/5	66,45	M12x1,5	T	15
CLS (C219)													
	10.04 - 12.11	S1-7-14-50-27-17	20	2	S90-2-10-002	S90-2-10-002-B	S6, S57	91210002	112/5	66,45	M14x1,5	T	-12
	10.04 - 12.11	M14x1,5x27, KU r=14	24	2	S90-2-12-004	S90-2-12-004-B	S6, S57	91212004	112/5	66,45	M14x1,5	T	-12
	10.04 - 12.11		30	2	S90-2-15-017	S90-2-15-017-B	S6, S57	91215017	112/5	66,45	M14x1,5	T	-12
	10.04 - 12.11		40	2	S90-2-20-007	S90-2-20-007-B	S6, S57	91220007	112/5	66,45	M14x1,5	T	-12
	10.04 - 12.11		40	7	S90-7-20-016	S90-7-20-016-B	S6	91720016	112/5	66,45	M14x1,5	T	-12
	10.04 - 12.11		50	7	S90-7-25-016		S6	91725016	112/5	66,45	M14x1,5	T	-12
	10.04 - 12.11		60	7	S90-7-30-007		S6	91730007	112/5	66,45	M14x1,5	T	-12

Modell | *Model*	Baujahr | *Year*	Original-radschraube (nicht bestellbar) | *Original Bolt (not available)*	Spurweiten-änd. Achse | *Total track widening* (mm)	Eibach System	Artikel-Nr. silber | *Part-No. silver*	Artikel-Nr. schwarz | *Part-No. black*	Hinweise | *Notes*	Kennzeichnung | *Stamping*	Lochkreis | - Anzahl | *Bolt pattern* | *No. of holes*	Zentrierung | *Centre bore* (mm)	Gewinde | *Thread*	Gutachten | *Homologation*	ET-Grenze | *Offset frontier*
MERCEDES-BENZ													
CLS (C218)													
	01.11 -	S1-7-14-50-27-17	20	2	S90-2-10-002	S90-2-10-002-B	S6, S57	91210002	112/5	66,45	M14x1,5	T	4,5
	01.11 -	M14x1,5x27, KU r=14	24	2	S90-2-12-004	S90-2-12-004-B	S6, S57	91212004	112/5	66,45	M14x1,5	T	4,5
	01.11 -		30	2	S90-2-15-017	S90-2-15-017-B	S6, S57	91215017	112/5	66,45	M14x1,5	T	4,5
	01.11 -		40	2	S90-2-20-007	S90-2-20-007-B	S6, S57	91220007	112/5	66,45	M14x1,5	T	4,5
	01.11 -		40	7	S90-7-20-016	S90-7-20-016-B	S6	91720016	112/5	66,45	M14x1,5	T	4,5
	01.11 -		50	7	S90-7-25-016		S6	91725016	112/5	66,45	M14x1,5	T	4,5
	01.11 -		60	7	S90-7-30-007		S6	91730007	112/5	66,45	M14x1,5	T	4,5
CLS Shooting Brake (X218)													
	10.12 -	S1-7-14-50-27-17	20	2	S90-2-10-002	S90-2-10-002-B	S6, S57	91210002	112/5	66,45	M14x1,5	T	4,5
	10.12 -	M14x1,5x27, KU r=14	24	2	S90-2-12-004	S90-2-12-004-B	S6, S57	91212004	112/5	66,45	M14x1,5	T	4,5
	10.12 -		30	2	S90-2-15-017	S90-2-15-017-B	S6, S57	91215017	112/5	66,45	M14x1,5	T	4,5
	10.12 -		40	2	S90-2-20-007	S90-2-20-007-B	S6, S57	91220007	112/5	66,45	M14x1,5	T	4,5
	10.12 -		40	7	S90-7-20-016	S90-7-20-016-B	S6	91720016	112/5	66,45	M14x1,5	T	4,5
	10.12 -		50	7	S90-7-25-016		S6	91725016	112/5	66,45	M14x1,5	T	4,5
	10.12 -		60	7	S90-7-30-007		S6	91730007	112/5	66,45	M14x1,5	T	4,5
COUPE (C124)													
	03.87 - 05.93	S1-5-12-50-30-17	10	1	S90-1-05-014		S11, S57	91105014	112/5	66,45	M12x1,5	T	20
	03.87 - 05.93	M12x1,5x30, KU r=12	30	2	S90-2-15-017	S90-2-15-017-B	S51, S57	91215017	112/5	66,45	M12x1,5	T	20
	03.87 - 05.93		40	2	S90-2-20-007	S90-2-20-007-B	S52, S57	91220007	112/5	66,45	M12x1,5	§21	20
	03.87 - 05.93		50	7	S90-7-25-009		S6	91725009	112/5	66,45	M12x1,5	§21	20
	03.87 - 05.93		60	7	S90-7-30-001		S6	91730001	112/5	66,45	M12x1,5	§21	20
E-KLASSE (W124)													
E-CLASS (W124)	06.93 - 12.95	S1-5-12-50-30-17	10	1	S90-1-05-014		S11, S57	91105014	112/5	66,45	M12x1,5	T	20
	06.93 - 12.95	M12x1,5x30, KU r=12	30	2	S90-2-15-017	S90-2-15-017-B	S51, S57	91215017	112/5	66,45	M12x1,5	T	20
	06.93 - 12.95		40	2	S90-2-20-007	S90-2-20-007-B	S52, S57	91220007	112/5	66,45	M12x1,5	§21	20
	06.93 - 12.95		50	7	S90-7-25-009		S6	91725009	112/5	66,45	M12x1,5	§21	20
	06.93 - 12.95		60	7	S90-7-30-001		S6	91730001	112/5	66,45	M12x1,5	§21	20
E-KLASSE (W210)													
E-CLASS (W210)	06.95 - 08.03	S1-5-12-50-30-17	10	1	S90-1-05-014		S11, S57	91105014	112/5	66,45	M12x1,5	T	20
	06.95 - 08.03	M12x1,5x30, KU r=12	20	2	S90-2-10-002	S90-2-10-002-B	S48, S57	91210002	112/5	66,45	M12x1,5	T	20
	06.95 - 08.03		30	2	S90-2-15-017	S90-2-15-017-B	S51, S57	91215017	112/5	66,45	M12x1,5	T	20
	06.95 - 08.03		40	2	S90-2-20-007	S90-2-20-007-B	S52, S57	91220007	112/5	66,45	M12x1,5	T	20
	06.95 - 08.03		50	7	S90-7-25-009		S6	91725009	112/5	66,45	M12x1,5	T	20
	06.95 - 08.03		60	7	S90-7-30-001		S6	91730001	112/5	66,45	M12x1,5	T	20
E-KLASSE (W211)													
E-CLASS (W211)	03.02 - 03.09	S1-7-14-50-27-17	20	2	S90-2-10-002	S90-2-10-002-B	S48, S57	91210002	112/5	66,45	M14x1,5	T	3
	03.02 - 03.09	M14x1,5x27, KU r=14	30	2	S90-2-15-017	S90-2-15-017-B	S51, S57	91215017	112/5	66,45	M14x1,5	T	3
	03.02 - 03.09		40	2	S90-2-20-007	S90-2-20-007-B	S52, S57	91220007	112/5	66,45	M14x1,5	T	3
	03.02 - 03.09		50	7	S90-7-25-016		S6	91725016	112/5	66,45	M14x1,5	T	3
	03.02 - 03.09		60	7	S90-7-30-007		S6	91730007	112/5	66,45	M14x1,5	T	3
E-KLASSE (W212)													
E-CLASS (W212)	01.09 -	S1-7-14-50-27-17	20	2	S90-2-10-002	S90-2-10-002-B	S6, S57	91210002	112/5	66,45	M14x1,5	T	17
	01.09 -	M14x1,5x27, KU r=14	24	2	S90-2-12-004	S90-2-12-004-B	S6, S57	91212004	112/5	66,45	M14x1,5	T	17
	01.09 -		30	2	S90-2-15-017	S90-2-15-017-B	S57	91215017	112/5	66,45	M14x1,5	T	17
	01.09 -		40	2	S90-2-20-007	S90-2-20-007-B	S57	91220007	112/5	66,45	M14x1,5	T	17
	01.09 -		40	7	S90-7-20-016	S90-7-20-016-B		91720016	112/5	66,45	M14x1,5	T	17
	01.09 -		50	7	S90-7-25-016			91725016	112/5	66,45	M14x1,5	T	17
	01.09 -		60	7	S90-7-30-007			91730007	112/5	66,45	M14x1,5	T	17
E-KLASSE Cabriolet (A124)													
E-CLASS Convertible (A124)	05.93 - 03.98	S1-5-12-50-30-17	10	1	S90-1-05-014		S11, S57	91105014	112/5	66,45	M12x1,5	T	20
	05.93 - 03.98	M12x1,5x30, KU r=12	30	2	S90-2-15-017	S90-2-15-017-B	S51, S57	91215017	112/5	66,45	M12x1,5	T	20
	05.93 - 03.98		40	2	S90-2-20-007	S90-2-20-007-B	S52, S57	91220007	112/5	66,45	M12x1,5	§21	20
	05.93 - 03.98		50	7	S90-7-25-009		S6	91725009	112/5	66,45	M12x1,5	§21	20
	05.93 - 03.98		60	7	S90-7-30-001		S6	91730001	112/5	66,45	M12x1,5	§21	20
E-KLASSE Cabriolet (A207)													
E-CLASS Convertible (A207)	01.10 -	S1-7-14-50-27-17	20	2	S90-2-10-002	S90-2-10-002-B	S6, S57	91210002	112/5	66,45	M14x1,5	T	15
	01.10 -	M14x1,5x27, KU r=14	24	2	S90-2-12-004	S90-2-12-004-B	S6, S57	91212004	112/5	66,45	M14x1,5	T	15
	01.10 -		30	2	S90-2-15-017	S90-2-15-017-B	S57	91215017	112/5	66,45	M14x1,5	T	15
	01.10 -		40	2	S90-2-20-007	S90-2-20-007-B	S57	91220007	112/5	66,45	M14x1,5	T	15
	01.10 -		40	7	S90-7-20-016	S90-7-20-016-B		91720016	112/5	66,45	M14x1,5	T	15
	01.10 -		50	7	S90-7-25-016			91725016	112/5	66,45	M14x1,5	T	15
	01.10 -		60	7	S90-7-30-007			91730007	112/5	66,45	M14x1,5	T	15
E-KLASSE Coupe (C124)													
E-CLASS Coupe (C124)	06.93 - 06.97	S1-5-12-50-30-17	10	1	S90-1-05-014		S11, S57	91105014	112/5	66,45	M12x1,5	T	20
	06.93 - 06.97	M12x1,5x30, KU r=12	30	2	S90-2-15-017	S90-2-15-017-B	S51, S57	91215017	112/5	66,45	M12x1,5	T	20
	06.93 - 06.97		40	2	S90-2-20-007	S90-2-20-007-B	S52, S57	91220007	112/5	66,45	M12x1,5	§21	20
	06.93 - 06.97		50	7	S90-7-25-009		S6	91725009	112/5	66,45	M12x1,5	§21	20
	06.93 - 06.97		60	7	S90-7-30-001		S6	91730001	112/5	66,45	M12x1,5	§21	20
E-KLASSE Coupe (C207)													
E-CLASS Coupe (C207)	01.09 -	S1-7-14-50-27-17	20	2	S90-2-10-002	S90-2-10-002-B	S6, S57	91210002	112/5	66,45	M14x1,5	T	15
	01.09 -	M14x1,5x27, KU r=14	24	2	S90-2-12-004	S90-2-12-004-B	S6, S57	91212004	112/5	66,45	M14x1,5	T	15
	01.09 -		30	2	S90-2-15-017	S90-2-15-017-B	S57	91215017	112/5	66,45	M14x1,5	T	15
	01.09 -		40	2	S90-2-20-007	S90-2-20-007-B	S57	91220007	112/5	66,45	M14x1,5	T	15
	01.09 -		40	7	S90-7-20-016	S90-7-20-016-B		91720016	112/5	66,45	M14x1,5	T	15
	01.09 -		50	7	S90-7-25-016			91725016	112/5	66,45	M14x1,5	T	15
	01.09 -		60	7	S90-7-30-007			91730007	112/5	66,45	M14x1,5	T	15
E-KLASSE Kombi (S124)													
E-CLASS Estate (S124)	06.93 - 06.96	S1-5-12-50-30-17	10	1	S90-1-05-014		S11, S57	91105014	112/5	66,45	M12x1,5	T	20
	06.93 - 06.96	M12x1,5x30, KU r=12	30	2	S90-2-15-017	S90-2-15-017-B	S51, S57	91215017	112/5	66,45	M12x1,5	T	20
	06.93 - 06.96		40	2	S90-2-20-007	S90-2-20-007-B	S52, S57	91220007	112/5	66,45	M12x1,5	§21	20
	06.93 - 06.96		50	7	S90-7-25-009		S6	91725009	112/5	66,45	M12x1,5	§21	20
	06.93 - 06.96		60	7	S90-7-30-001		S6	91730001	112/5	66,45	M12x1,5	§21	20
E-KLASSE Kombi (S210)													
E-CLASS Estate (S210)	06.96 - 03.03	S1-5-12-50-30-17	10	1	S90-1-05-014		S11, S57	91105014	112/5	66,45	M12x1,5	T	20
	06.96 - 03.03	M12x1,5x30, KU r=12	20	2	S90-2-10-002	S90-2-10-002-B	S48, S57	91210002	112/5	66,45	M12x1,5	T	20
	06.96 - 03.03		30	2	S90-2-15-017	S90-2-15-017-B	S51, S57	91215017	112/5	66,45	M12x1,5	T	20
	06.96 - 03.03		40	2	S90-2-20-007	S90-2-20-007-B	S52, S57	91220007	112/5	66,45	M12x1,5	T	20
	06.96 - 03.03		50	7	S90-7-25-009		S6	91725009	112/5	66,45	M12x1,5	T	20
	06.96 - 03.03		60	7	S90-7-30-001		S6	91730001	112/5	66,45	M12x1,5	T	20
E-KLASSE Kombi (S211)													
E-CLASS T-Model (S211)	03.03 - 07.09	S1-7-14-50-27-17	20	2	S90-2-10-002	S90-2-10-002-B	S48, S57	91210002	112/5	66,45	M14x1,5	T	3
	03.03 - 07.09	M14x1,5x27, KU r=14	30	2	S90-2-15-017	S90-2-15-017-B	S51, S57	91215017	112/5	66,45	M14x1,5	T	3
	03.03 - 07.09		40	2	S90-2-20-007	S90-2-20-007-B	S52, S57	91220007	112/5	66,45	M14x1,5	T	3
	03.03 - 07.09		50	7	S90-7-25-016		S6	91725016	112/5	66,45	M14x1,5	T	3
	03.03 - 07.09		60	7	S90-7-30-007		S6	91730007	112/5	66,45	M14x1,5	T	3

Modell | *Model*	Baujahr | *Year*	Original-radschraube (nicht bestellbar) | *Original Bolt (not available)*	Spurweiten-änd. Achse | *Total track widening* (mm)	Eibach System	Artikel-Nr. silber | *Part-No. silver*	Artikel-Nr. schwarz | *Part-No. black*	Hinweise | *Notes*	Kennzeichnung | *Stamping*	Lochkreis | - Anzahl | *Bolt pattern* | *No. of holes*	Zentrierung | *Centre bore* (mm)	Gewinde | *Thread*	Gutachten | *Homologation*	ET-Grenze | *Offset frontier*
MERCEDES-BENZ													
E-CLASS Kombi (S212)													
E-CLASS T-Model (S212)	08.09 -	S1-7-14-50-27-17	20	2	S90-2-10-002	S90-2-10-002-B	S6, S57	91210002	112/5	66,45	M14x1,5	T	17
	08.09 -	M14x1,5x27, KU r=14	24	2	S90-2-12-004	S90-2-12-004-B	S6, S57	91212004	112/5	66,45	M14x1,5	T	17
	08.09 -		30	2	S90-2-15-017	S90-2-15-017-B	S57	91215017	112/5	66,45	M14x1,5	T	17
	08.09 -		40	2	S90-2-20-007	S90-2-20-007-B	S57	91220007	112/5	66,45	M14x1,5	T	17
	08.09 -		40	7	S90-7-20-016	S90-7-20-016-B		91720016	112/5	66,45	M14x1,5	T	17
	08.09 -		50	7	S90-7-25-016			91725016	112/5	66,45	M14x1,5	T	17
	08.09 -		60	7	S90-7-30-007			91730007	112/5	66,45	M14x1,5	T	17
G-KLASSE (W460)													
G-CLASS (W460)	09.89 - 08.93	S1-7-14-50-42-17	40	7	S90-7-20-020		S15	91720020	130/5	84	M14x1,5	T	10
	09.89 - 08.93	M14x1,5x42, KU r=14	50	7	S90-7-25-023		S15	91725023	130/5	84	M14x1,5	T	10
G-KLASSE (W463)													
G-CLASS (W463)	09.89 -	S1-7-14-50-42-17	40	7	S90-7-20-020		S15	91720020	130/5	84	M14x1,5	T	10
	09.89 -	M14x1,5x42, KU r=14	50	7	S90-7-25-023		S15	91725023	130/5	84	M14x1,5	T	10
G-KLASSE (W461)													
G-CLASS (W461)	02.90 -	S1-7-14-50-42-17	40	7	S90-7-20-020		S15	91720020	130/5	84	M14x1,5	T	10
	02.90 -	M14x1,5x42, KU r=14	50	7	S90-7-25-023		S15	91725023	130/5	84	M14x1,5	T	10
G-KLASSE Cabrio (W463)													
G-CLASS Convertible (W463)	09.89 -	S1-7-14-50-42-17	40	7	S90-7-20-020		S15	91720020	130/5	84	M14x1,5	T	10
	09.89 -	M14x1,5x42, KU r=14	50	7	S90-7-25-023		S15	91725023	130/5	84	M14x1,5	T	10
GLA-KLASSE (X156)													
GLA-CLASS (X156)	12.13 -	S1-7-14-50-27-17	10	1	S90-1-05-036		S57, S78	91105014	112/5	66,45	M14x1,5	T	13
	12.13 -	M14x1,5x27, KU r=14	20	2	S90-2-10-002	S90-2-10-002-B	S57	91210002	112/5	66,45	M14x1,5	T	13
	12.13 -		24	2	S90-2-12-004	S90-2-12-004-B	S57	91212004	112/5	66,45	M14x1,5	T	13
	12.13 -		30	2	S90-2-15-017	S90-2-15-017-B	S57	91215017	112/5	66,45	M14x1,5	T	13
	12.13 -		40	2	S90-2-20-007	S90-2-20-007-B	S57	91220007	112/5	66,45	M14x1,5	T	13
	12.13 -		40	7	S90-7-20-016	S90-7-20-016-B	S45	91720016	112/5	66,45	M14x1,5	T	13
	12.13 -		50	7	S90-7-25-016			91725016	112/5	66,45	M14x1,5	T	13
	12.13 -		60	7	S90-7-30-007			91730007	112/5	66,45	M14x1,5	T	13
GL-KLASSE (X164)													
GL-CLASS (X164)	09.06 -	S1-7-14-50-45-17	20	2	S90-2-10-002	S90-2-10-002-B	S6, S57	91210002	112/5	66,45	M14x1,5	§21	
	09.06 -	M14x1,5x45, KU r=14	24	2	S90-2-12-004	S90-2-12-004-B	S6, S57	91212004	112/5	66,45	M14x1,5	§21	
	09.06 -		30	2	S90-2-15-017	S90-2-15-017-B	S57	91215017	112/5	66,45	M14x1,5	§21	
	09.06 -		40	2	S90-2-20-007	S90-2-20-007-B	S57	91220007	112/5	66,45	M14x1,5	§21	
	09.06 -		40	7	S90-7-20-016	S90-7-20-016-B		91720016	112/5	66,45	M14x1,5	§21	
	09.06 -		50	7	S90-7-25-016			91725016	112/5	66,45	M14x1,5	§21	
	09.06 -		60	7	S90-7-30-007			91730007	112/5	66,45	M14x1,5	§21	
GLK-KLASSE (X204)													
GLK-CLASS (X204)	06.08 -	S1-7-14-50-45-17	20	2	S90-2-10-002	S90-2-10-002-B	S57	91210002	112/5	66,45	M14x1,5	T	17
	06.08 -	M14x1,5x45, KU r=14	24	2	S90-2-12-004	S90-2-12-004-B	S57	91212004	112/5	66,45	M14x1,5	T	17
	06.08 -		30	2	S90-2-15-017	S90-2-15-017-B	S57	91215017	112/5	66,45	M14x1,5	T	17
	06.08 -		40	2	S90-2-20-007	S90-2-20-007-B	S57	91220007	112/5	66,45	M14x1,5	T	17
	06.08 -		40	7	S90-7-20-016	S90-7-20-016-B		91720016	112/5	66,45	M14x1,5	T	17
	06.08 -		50	7	S90-7-25-016			91725016	112/5	66,45	M14x1,5	T	17
	06.08 -		60	7	S90-7-30-007			91730007	112/5	66,45	M14x1,5	T	17
KOMBI Kombi (S124)													
KOMBI Estate (S124)	09.85 - 07.93	S1-5-12-50-30-17	10	1	S90-1-05-014		S11, S57	91105014	112/5	66,45	M12x1,5	T	20
	09.85 - 07.93	M12x1,5x30, KU r=12	30	2	S90-2-15-017	S90-2-15-017-B	S51, S57	91215017	112/5	66,45	M12x1,5	T	20
	09.85 - 07.93		40	2	S90-2-20-007	S90-2-20-007-B	S52, S57	91220007	112/5	66,45	M12x1,5	§21	20
	09.85 - 07.93		50	7	S90-7-25-009		S6	91725009	112/5	66,45	M12x1,5	§21	20
	09.85 - 07.93		60	7	S90-7-30-001		S6	91730001	112/5	66,45	M12x1,5	§21	20
M-KLASSE (W163)													
M-CLASS (W163)	02.98 - 06.05	S1-7-14-50-27-17	10	1	S90-1-05-014		S57	91105014	112/5	66,45	M14x1,5	T	32
	02.98 - 06.05	M14x1,5x27, KU r=14	20	2	S90-2-10-002	S90-2-10-002-B	S57	91210002	112/5	66,45	M14x1,5	T	32
	02.98 - 06.05		30	2	S90-2-15-017	S90-2-15-017-B	S57	91215017	112/5	66,45	M14x1,5	T	32
	02.98 - 06.05		40	2	S90-2-20-007	S90-2-20-007-B	S57	91220007	112/5	66,45	M14x1,5	T	32
	02.98 - 06.05		40	7	S90-7-20-016	S90-7-20-016-B		91720016	112/5	66,45	M14x1,5	T	32
	02.98 - 06.05		50	7	S90-7-25-016			91725016	112/5	66,45	M14x1,5	T	32
	02.98 - 06.05		60	7	S90-7-30-007			91730007	112/5	66,45	M14x1,5	T	32
M-KLASSE (W164)													
M-CLASS (W164)	07.05 -	S1-7-14-50-27-17 M14x1,5x27, KU r=14	20	2	S90-2-10-002	S90-2-10-002-B	S50, S53, S57	91210002	112/5	66,45	M14x1,5	T	26
	07.05 -		24	2	S90-2-12-004	S90-2-12-004-B	S49, S53, S57	91212004	112/5	66,45	M14x1,5	T	26
	07.05 -	S1-7-14-50-40-17 M14x1,5x40, KU r=14	30	2	S90-2-15-017	S90-2-15-017-B	S49, S53, S57	91215017	112/5	66,45	M14x1,5	T	26
	07.05 -		40	2	S90-2-20-007	S90-2-20-007-B	S49, S53, S57	91220007	112/5	66,45	M14x1,5	T	26
	07.05 -	S1-7-14-50-45-17	40	7	S90-7-20-016	S90-7-20-016-B	S45	91720016	112/5	66,45	M14x1,5	T	26
	07.05 -	M14x1,5x45, KU r=14	50	7	S90-7-25-016			91725016	112/5	66,45	M14x1,5	T	26
	07.05 -		60	7	S90-7-30-007			91730007	112/5	66,45	M14x1,5	T	26
M-KLASSE (166)													
M-CLASS (W166)	06.11 -	S1-7-14-50-27-17 M14x1,5x27, KU r=14	20	2	S90-2-10-002	S90-2-10-002-B	S50, S53, S57	91210002	112/5	66,45	M14x1,5	T	23
	06.11 -		24	2	S90-2-12-004	S90-2-12-004-B	S49, S53, S57	91212004	112/5	66,45	M14x1,5	T	23
	06.11 -	S1-7-14-50-40-17 M14x1,5x40, KU r=14	30	2	S90-2-15-017	S90-2-15-017-B	S49, S53, S57	91215017	112/5	66,45	M14x1,5	T	23
	06.11 -		40	2	S90-2-20-007	S90-2-20-007-B	S49, S53, S57	91220007	112/5	66,45	M14x1,5	T	23
	06.11 -	S1-7-14-50-45-17	40	7	S90-7-20-016	S90-7-20-016-B	S45	91720016	112/5	66,45	M14x1,5	T	23
	06.11 -	M14x1,5x45, KU r=14	50	7	S90-7-25-016			91725016	112/5	66,45	M14x1,5	T	23
	06.11 -		60	7	S90-7-30-007			91730007	112/5	66,45	M14x1,5	T	23
S-KLASSE (W126)													
S-CLASS (W126)	10.79 - 06.91	S1-5-12-50-30-17	10	1	S90-1-05-014		S11, S57	91105014	112/5	66,45	M12x1,5	T	15
	10.79 - 06.91	M12x1,5x30, KU r=12	30	2	S90-2-15-017	S90-2-15-017-B	S51, S57	91215017	112/5	66,45	M12x1,5	T	15
	10.79 - 06.91		40	2	S90-2-20-007	S90-2-20-007-B	S52, S57	91220007	112/5	66,45	M12x1,5	§21	15
	10.79 - 06.91		50	7	S90-7-25-009		S6	91725009	112/5	66,45	M12x1,5	§21	15
	10.79 - 06.91		60	7	S90-7-30-001		S6	91730001	112/5	66,45	M12x1,5	§21	15
S-KLASSE (W140)													
S-CLASS (W140)	02.91 - 10.98	S1-7-14-50-45-17	10	1	S90-1-05-014		S11, S57	91105014	112/5	66,45	M14x1,5	T	36
	02.91 - 10.98	M14x1,5x45, KU r=14	20	2	S90-2-10-002	S90-2-10-002-B	S48, S57	91210002	112/5	66,45	M14x1,5	T	36
	02.91 - 10.98		30	2	S90-2-15-017	S90-2-15-017-B	S51, S57	91215017	112/5	66,45	M14x1,5	T	36
S-KLASSE (W220)													
S-CLASS (W220)	10.98 - 08.05	S1-7-14-50-45-17	10	1	S90-1-05-014		S11, S57	91105014	112/5	66,45	M14x1,5	T	29
	10.98 - 08.05	M14x1,5x45, KU r=14	20	2	S90-2-10-002	S90-2-10-002-B	S48, S57	91210002	112/5	66,45	M14x1,5	T	29
	10.98 - 08.05		30	2	S90-2-15-017	S90-2-15-017-B	S51, S57	91215017	112/5	66,45	M14x1,5	T	29

Modell | *Model*	Baujahr | *Year*	Original-radschraube (nicht bestellbar) | *Original Bolt (not available)*	Spurweiten-änd. Achse | *Total track widening* (mm)	Eibach System	Artikel-Nr. silber | *Part-No. silver*	Artikel-Nr. schwarz | *Part-No. black*	Hinweise | *Notes*	Kennzeichnung | *Stamping*	Lochkreis | - Anzahl | *Bolt pattern* | *No. of holes*	Zentrierung | *Centre bore* (mm)	Gewinde | *Thread*	Gutachten | *Homologation*	ET-Grenze | *Offset frontier*
MERCEDES-BENZ													
S-KLASSE Coupe (C126)													
S-CLASS Coupe (C126)	08.80 - 06.91	S1-5-12-50-30-17	10	1	S90-1-05-014		S11, S57	91105014	112/5	66,45	M12x1,5	T	15
	08.80 - 06.91	M12x1,5x30, KU r=12	30	2	S90-2-15-017	S90-2-15-017-B	S51, S57	91215017	112/5	66,45	M12x1,5	T	15
	08.80 - 06.91		40	2	S90-2-20-007	S90-2-20-007-B	S52, S57	91220007	112/5	66,45	M12x1,5	§21	15
	08.80 - 06.91		50	7	S90-7-25-009		S6	91725009	112/5	66,45	M12x1,5	§21	15
	08.80 - 06.91		60	7	S90-7-30-001		S6	91730001	112/5	66,45	M12x1,5	§21	15
S-KLASSE Coupe (C140)													
S-CLASS Coupe (C140)	07.92 - 02.99	S1-7-14-50-45-17	10	1	S90-1-05-014		S11, S57	91105014	112/5	66,45	M14x1,5	T	36
	07.92 - 02.99	M14x1,5x45, KU r=14	20	2	S90-2-10-002	S90-2-10-002-B	S48, S57	91210002	112/5	66,45	M14x1,5	T	36
	07.92 - 02.99		30	2	S90-2-15-017	S90-2-15-017-B	S51, S57	91215017	112/5	66,45	M14x1,5	T	36
S-KLASSE Coupe (C215)													
S-CLASS Coupe (C215)	03.99 - 08.06	S1-7-14-50-45-17	10	1	S90-1-05-014		S11, S57	91105014	112/5	66,45	M14x1,5	§21	
	03.99 - 08.06	M14x1,5x45, KU r=14	20	2	S90-2-10-002	S90-2-10-002-B	S48, S57	91210002	112/5	66,45	M14x1,5	§21	
	03.99 - 08.06		30	2	S90-2-15-017	S90-2-15-017-B	S51, S57	91215017	112/5	66,45	M14x1,5	§21	
	03.99 - 08.06		40	2	S90-2-20-007	S90-2-20-007-B	S52, S57	91220007	112/5	66,45	M14x1,5	§21	
SL (R107)													
	05.71 - 12.89	S1-5-12-50-30-17	10	1	S90-1-05-014		S11, S57	91105014	112/5	66,45	M12x1,5	§21	
	05.71 - 12.89	M12x1,5x30, KU r=12	30	2	S90-2-15-017	S90-2-15-017-B	S51, S57	91215017	112/5	66,45	M12x1,5	§21	
	05.71 - 12.89		40	2	S90-2-20-007	S90-2-20-007-B	S52, S57	91220007	112/5	66,45	M12x1,5	§21	
	05.71 - 12.89		50	7	S90-7-25-009		S6	91725009	112/5	66,45	M12x1,5	§21	
	05.71 - 12.89		60	7	S90-7-30-001		S6	91730001	112/5	66,45	M12x1,5	§21	
SL (R129)													
	03.89 - 12.01	S1-5-12-50-40-17	10	1	S90-1-05-014		S11, S57	91105014	112/5	66,45	M12x1,5	§21	
	03.89 - 12.01	M12x1,5x40, KU r=12	30	2	S90-2-15-017	S90-2-15-017-B	S51, S57	91215017	112/5	66,45	M12x1,5	§21	
	03.89 - 12.01		40	2	S90-2-20-007	S90-2-20-007-B	S52, S57	91220007	112/5	66,45	M12x1,5	§21	
	03.89 - 12.01		50	7	S90-7-25-009		S6	91725009	112/5	66,45	M12x1,5	§21	
	03.89 - 12.01		60	7	S90-7-30-001		S6	91730001	112/5	66,45	M12x1,5	§21	
SL (R230)													
	10.01 - 01.12	S1-7-14-50-27-17	30	2	S90-2-15-017	S90-2-15-017-B	S6, S57	91215017	112/5	66,45	M14x1,5	T	15
	10.01 - 01.12	M14x1,5x27, KU r=14	40	2	S90-2-20-007	S90-2-20-007-B	S6, S57	91220007	112/5	66,45	M14x1,5	T	15
	10.01 - 01.12		50	7	S90-7-25-016		S6	91725016	112/5	66,45	M14x1,5	T	15
	10.01 - 01.12		60	7	S90-7-30-007		S6	91730007	112/5	66,45	M14x1,5	T	15
SL (R231)													
	01.12 -	S1-7-14-50-27-17	24	2	S90-2-12-004	S90-2-12-004-B	S57	91212004	112/5	66,45	M14x1,5	T	15
	01.12 -	M14x1,5x27, KU r=14	30	2	S90-2-15-017	S90-2-15-017-B	S57	91215017	112/5	66,45	M14x1,5	T	15
	01.12 -		40	2	S90-2-20-007	S90-2-20-007-B	S57	91220007	112/5	66,45	M14x1,5	T	15
	01.12 -		40	7	S90-7-20-016	S90-7-20-016-B	S45	91720016	112/5	66,45	M14x1,5	T	15
	01.12 -		50	7	S90-7-25-016			91725016	112/5	66,45	M14x1,5	T	15
	01.12 -		60	7	S90-7-30-007			91730007	112/5	66,45	M14x1,5	T	15
SLK (R170)													
	04.96 - 04.04	S1-5-12-50-40-17	10	1	S90-1-05-014		S11, S57	91105014	112/5	66,45	M12x1,5	T	15
	04.96 - 04.04	M12x1,5x40, KU r=12	20	2	S90-2-10-002	S90-2-10-002-B	S48, S57	91210002	112/5	66,45	M12x1,5	T	15
	04.96 - 04.04		30	2	S90-2-15-017	S90-2-15-017-B	S51, S57	91215017	112/5	66,45	M12x1,5	T	15
	04.96 - 04.04		40	2	S90-2-20-007	S90-2-20-007-B	S52, S57	91220007	112/5	66,45	M12x1,5	T	15
	04.96 - 04.04		50	7	S90-7-25-009		S6	91725009	112/5	66,45	M12x1,5	T	15
	04.96 - 04.04		60	7	S90-7-30-001		S6	91730001	112/5	66,45	M12x1,5	T	15
SLK (R171)													
	03.04 - 02.11	S1-5-12-50-40-17	20	2	S90-2-10-002	S90-2-10-002-B	S48, S57	91210002	112/5	66,45	M12x1,5	T	0
	03.04 - 02.11	M12x1,5x40, KU r=12	30	2	S90-2-15-017	S90-2-15-017-B	S51, S57	91215017	112/5	66,45	M12x1,5	T	0
	03.04 - 02.11		40	2	S90-2-20-007	S90-2-20-007-B	S52, S57	91220007	112/5	66,45	M12x1,5	T	0
	03.04 - 02.11		40	7	S90-7-20-018		S6	91720018	112/5	66,45	M12x1,5	T	0
	03.04 - 02.11		50	7	S90-7-25-009		S6	91725009	112/5	66,45	M12x1,5	T	0
	03.04 - 02.11		60	7	S90-7-30-001		S6	91730001	112/5	66,45	M12x1,5	T	0
SLK (R172)													
	02.11 -	S1-7-14-50-27-17	24	2	S90-2-12-004	S90-2-12-004-B	S57	91212004	112/5	66,45	M14x1,5	T	8
	02.11 -	M14x1,5x27, KU r=14	30	2	S90-2-15-017	S90-2-15-017-B	S57	91215017	112/5	66,45	M14x1,5	T	8
	02.11 -		40	2	S90-2-20-007	S90-2-20-007-B	S57	91220007	112/5	66,45	M14x1,5	T	8
	02.11 -		40	7	S90-7-20-016	S90-7-20-016-B	S45	91720016	112/5	66,45	M14x1,5	T	8
	02.11 -		50	7	S90-7-25-016			91725016	112/5	66,45	M14x1,5	T	8
	02.11 -		60	7	S90-7-30-007			91730007	112/5	66,45	M14x1,5	T	8
Stufenheck (W124)													
Saloon (W124)	12.84 - 06.93	S1-5-12-50-30-17	10	1	S90-1-05-014		S11, S57	91105014	112/5	66,45	M12x1,5	T	20
	12.84 - 06.93	M12x1,5x30, KU r=12	30	2	S90-2-15-017	S90-2-15-017-B	S51, S57	91215017	112/5	66,45	M12x1,5	T	20
	12.84 - 06.93		40	2	S90-2-20-007	S90-2-20-007-B	S52, S57	91220007	112/5	66,45	M12x1,5	§21	20
	12.84 - 06.93		50	7	S90-7-25-009		S6	91725009	112/5	66,45	M12x1,5	§21	20
	12.84 - 06.93		60	7	S90-7-30-001		S6	91730001	112/5	66,45	M12x1,5	§21	20
V-KLASSE (638/2)													
V-CLASS (638/2)	02.96 - 07.03	S1-7-14-50-27-17	10	1	S90-1-05-014		S57	91105014	112/5	66,45	M14x1,5	§21	
	02.96 - 07.03	M14x1,5x27, KU r=14	30	2	S90-2-15-017	S90-2-15-017-B	S57	91215017	112/5	66,45	M14x1,5	§21	
	02.96 - 07.03		40	2	S90-2-20-007	S90-2-20-007-B	S57	91220007	112/5	66,45	M14x1,5	§21	
V-KLASSE (W447)													
V-CLASS (W447)	03.14 -	S1-7-14-50-27-17	20	2	S90-2-10-002	S90-2-10-002-B	S53, S57	91210002	112/5	66,45	M14x1,5	T	36
	03.14 -	M14x1,5x27, KU r=14	24	2	S90-2-12-004	S90-2-12-004-B	S53, S57	91210004	112/5	66,45	M14x1,5	T	36
	03.14 -		30	2	S90-2-15-017	S90-2-15-017-B	S53, S57	91215017	112/5	66,45	M14x1,5	T	36
	03.14 -		40	2	S90-2-20-007	S90-2-20-007-B	S53, S57	91220007	112/5	66,45	M14x1,5	§21	36
	03.14 -		50	7	S90-7-25-016			91725016	112/5	66,45	M14x1,5	§21	36
	03.14 -		60	7	S90-7-30-007			91730007	112/5	66,45	M14x1,5	§21	36
VANEO (414)													
	02.02 - 07.05	S1-5-12-50-40-17	10	1	S90-1-05-014		S57	91105014	112/5	66,45	M12x1,5	T	27
	02.02 - 07.05	M12x1,5x40, KU r=12	20	2	S90-2-10-002	S90-2-10-002-B	S57	91210002	112/5	66,45	M12x1,5	T	27
	02.02 - 07.05		30	2	S90-2-15-017	S90-2-15-017-B	S57	91215017	112/5	66,45	M12x1,5	T	27
	02.02 - 07.05		40	2	S90-2-20-007	S90-2-20-007-B	S57	91220007	112/5	66,45	M12x1,5	T	27
	02.02 - 07.05		50	7	S90-7-25-009			91725009	112/5	66,45	M12x1,5	T	27
	02.02 - 07.05		60	7	S90-7-30-001			91730001	112/5	66,45	M12x1,5	T	27
VIANO (W639)													
	09.03 -	S1-7-14-50-27-17	20	2	S90-2-10-002	S90-2-10-002-B	S57	91210002	112/5	66,45	M14x1,5	T	40
	09.03 -	M14x1,5x27, KU r=14	30	2	S90-2-15-017	S90-2-15-017-B	S57	91215017	112/5	66,45	M14x1,5	T	40
	09.03 -		40	2	S90-2-20-007	S90-2-20-007-B	S57	91220007	112/5	66,45	M14x1,5	T	40
	09.03 -		40	7	S90-7-20-016	S90-7-20-016-B		91720016	112/5	66,45	M14x1,5	T	40
	09.03 -		50	7	S90-7-25-016			91725016	112/5	66,45	M14x1,5	T	40
	09.03 -		60	7	S90-7-30-007			91730007	112/5	66,45	M14x1,5	T	40
VITO / MIXTO Kasten (W639)													
VITO / MIXTO Box (W639)	09.03 -	S1-7-14-50-27-17	20	2	S90-2-10-002	S90-2-10-002-B	S57	91210002	112/5	66,45	M14x1,5	T	40
	09.03 -	M14x1,5x27, KU r=14	30	2	S90-2-15-017	S90-2-15-017-B	S57	91215017	112/5	66,45	M14x1,5	T	40
	09.03 -		40	2	S90-2-20-007	S90-2-20-007-B	S57	91220007	112/5	66,45	M14x1,5	T	40
	09.03 -		40	7	S90-7-20-016	S90-7-20-016-B		91720016	112/5	66,45	M14x1,5	T	40
	09.03 -		50	7	S90-7-25-016			91725016	112/5	66,45	M14x1,5	T	40
	09.03 -		60	7	S90-7-30-007			91730007	112/5	66,45	M14x1,5	T	40

Modell | *Model*	Baujahr | *Year*	Original-radschraube (nicht bestellbar) | *Original Bolt (not available)*	Spurweiten-änd. Achse | *Total track widening* (mm)	Eibach System	Artikel-Nr. silber | *Part-No. silver*	Artikel-Nr. schwarz | *Part-No. black*	Hinweise | *Notes*	Kennzeichnung | *Stamping*	Lochkreis | - Anzahl | *Bolt pattern* | *No. of holes*	Zentrierung | *Centre bore* (mm)	Gewinde | *Thread*	Gutachten | *Homologation*	ET-Grenze | *Offset frontier*
MERCEDES-BENZ													
VITO / MIXTO (W447)													
	10.14 -	S1-7-14-50-27-17	20	2	S90-2-10-002	S90-2-10-002-B	S53, S57	91210002	112/5	66,45	M14x1,5	§21	
	10.14 -	M14x1,5x27, KU r=14	24	2	S90-2-12-004	S90-2-12-004-B	S53, S57	91212004	112/5	66,45	M14x1,5	§21	
	10.14 -		30	2	S90-2-15-017	S90-2-15-017-B	S53, S57	91215017	112/5	66,45	M14x1,5	§21	
	10.14 -		40	2	S90-2-20-007	S90-2-20-007-B	S53, S57	91220007	112/5	66,45	M14x1,5	§21	
	10.14 -		50	7	S90-7-25-016			91725016	112/5	66,45	M14x1,5	§21	
	10.14 -		60	7	S90-7-30-007			91730007	112/5	66,45	M14x1,5	§21	
VITO Bus (638)													
	02.96 - 07.03	S1-7-14-50-27-17	20	2	S90-2-10-002	S90-2-10-002-B	S57	91210002	112/5	66,45	M14x1,5	§21	
	02.96 - 07.03	M14x1,5x27, KU r=14	30	2	S90-2-15-017	S90-2-15-017-B	S57	91215017	112/5	66,45	M14x1,5	§21	
	02.96 - 07.03		40	2	S90-2-20-007	S90-2-20-007-B	S57	91220007	112/5	66,45	M14x1,5	§21	
VITO Bus (W639)													
	09.03 -	S1-7-14-50-27-17	20	2	S90-2-10-002	S90-2-10-002-B	S57	91210002	112/5	66,45	M14x1,5	T	40
	09.03 -	M14x1,5x27, KU r=14	30	2	S90-2-15-017	S90-2-15-017-B	S57	91215017	112/5	66,45	M14x1,5	T	40
	09.03 -		40	2	S90-2-20-007	S90-2-20-007-B	S57	91220007	112/5	66,45	M14x1,5	T	40
	09.03 -		40	7	S90-7-20-016	S90-7-20-016-B		91720016	112/5	66,45	M14x1,5	T	40
	09.03 -		50	7	S90-7-25-016			91725016	112/5	66,45	M14x1,5	T	40
	09.03 -		60	7	S90-7-30-007			91730007	112/5	66,45	M14x1,5	T	40
VITO Kasten (638)													
VITO Box (638)	03.97 - 07.03	S1-7-14-50-27-17	20	2	S90-2-10-002	S90-2-10-002-B	S57	91210002	112/5	66,45	M14x1,5	§21	
	03.97 - 07.03	M14x1,5x27, KU r=14	30	2	S90-2-15-017	S90-2-15-017-B	S57	91215017	112/5	66,45	M14x1,5	§21	
	03.97 - 07.03		40	2	S90-2-20-007	S90-2-20-007-B	S57	91220007	112/5	66,45	M14x1,5	§21	
VITO Kasten (W447)													
VITO Box (W447)	10.14 -	S1-7-14-50-27-17	20	2	S90-2-10-002	S90-2-10-002-B	S53, S57	91210002	112/5	66,45	M14x1,5	§21	
	10.14 -	M14x1,5x27, KU r=14	24	2	S90-2-12-004	S90-2-12-004-B	S53, S57	91212004	112/5	66,45	M14x1,5	§21	
	10.14 -		30	2	S90-2-15-017	S90-2-15-017-B	S53, S57	91215017	112/5	66,45	M14x1,5	§21	
	10.14 -		40	2	S90-2-20-007	S90-2-20-007-B	S53, S57	91220007	112/5	66,45	M14x1,5	§21	
	10.14 -		50	7	S90-7-25-016			91725016	112/5	66,45	M14x1,5	§21	
	10.14 -		60	7	S90-7-30-007			91730007	112/5	66,45	M14x1,5	§21	
VITO Tourer (W447)													
	10.14 -	S1-7-14-50-27-17	20	2	S90-2-10-002	S90-2-10-002-B	S53, S57	91210002	112/5	66,45	M14x1,5	§21	
	10.14 -	M14x1,5x27, KU r=14	24	2	S90-2-12-004	S90-2-12-004-B	S53, S57	91212004	112/5	66,45	M14x1,5	§21	
	10.14 -		30	2	S90-2-15-017	S90-2-15-017-B	S53, S57	91215017	112/5	66,45	M14x1,5	§21	
	10.14 -		40	2	S90-2-20-007	S90-2-20-007-B	S53, S57	91220007	112/5	66,45	M14x1,5	§21	
	10.14 -		50	7	S90-7-25-016			91725016	112/5	66,45	M14x1,5	§21	
	10.14 -		60	7	S90-7-30-007			91730007	112/5	66,45	M14x1,5	§21	
MINI													
MINI (F55)													
	07.14 -	S1-1-14-25-27-17	20	2	S90-2-10-038			91210038	112/5	66,5	M14x1,25	T	16
	07.14 -	M14x1,25x27, KG60°	24	2	S90-2-12-023			91212023	112/5	66,5	M14x1,25	T	16
	07.14 -		30	2	S90-2-15-055			91215055	112/5	66,5	M14x1,25	T	16
	07.14 -		40	2	S90-2-20-036			91220036	112/5	66,5	M14x1,25	T	16
	07.14 -		40	7	S90-7-20-044			91720044	112/5	66,5	M14x1,25	T	16
	07.14 -		50	7	S90-7-25-052			91725052	112/5	66,5	M14x1,25	T	16
	07.14 -		60	7	S90-7-30-059			91730059	112/5	66,5	M14x1,25	T	16
MINI (F56)													
	12.13 -	S1-1-14-25-27-17	20	2	S90-2-10-038			91210038	112/5	66,5	M14x1,25	T	16
	12.13 -	M14x1,25x27, KG60°	24	2	S90-2-12-023			91212023	112/5	66,5	M14x1,25	T	16
	12.13 -		30	2	S90-2-15-055			91215055	112/5	66,5	M14x1,25	T	16
	12.13 -		40	2	S90-2-20-036			91220036	112/5	66,5	M14x1,25	T	16
	12.13 -		40	7	S90-7-20-044			91720044	112/5	66,5	M14x1,25	T	16
	12.13 -		50	7	S90-7-25-052			91725052	112/5	66,5	M14x1,25	T	16
	12.13 -		60	7	S90-7-30-059			91730059	112/5	66,5	M14x1,25	T	16
MINI (R50, R53)													
	06.01 - 09.06	S1-1-12-50-25-17	10	1	S90-1-05-025			91105025	100/4	56	M12x1,5	T	18
	06.01 - 09.06	M12x1,5x25, KG60°	24	2	S90-2-12-007			91212007	100/4	56	M12x1,5	T	18
	06.01 - 09.06		30	2	S90-2-15-027			91215027	100/4	56	M12x1,5	T	18
	06.01 - 09.06		40	2	S90-2-20-016			91220016	100/4	56	M12x1,5	T	18
	06.01 - 09.06		50	7	S90-7-25-029			91725029	100/4	56	M12x1,5	T	18
	06.01 - 09.06		60	7	S90-7-30-020			91730020	100/4	56	M12x1,5	T	18
MINI (R56)													
	09.06 - 11.13	S1-1-14-25-27-17	10	1	S90-1-05-025			91105025	100/4	56	M14x1,25	T	20
	09.06 - 11.13	M14x1,25x27, KG60°	24	2	S90-2-12-007			91212007	100/4	56	M14x1,25	T	20
	09.06 - 11.13		30	2	S90-2-15-027			91215027	100/4	56	M14x1,25	T	20
	09.06 - 11.13		40	2	S90-2-20-016			91220016	100/4	56	M14x1,25	T	20
MINI Cabriolet (R52)													
MINI Convertible (R52)	07.04 - 11.07	S1-1-12-50-25-17	10	1	S90-1-05-025			91105025	100/4	56	M12x1,5	T	18
	07.04 - 11.07	M12x1,5x25, KG60°	24	2	S90-2-12-007			91212007	100/4	56	M12x1,5	T	18
	07.04 - 11.07		30	2	S90-2-15-027			91215027	100/4	56	M12x1,5	T	18
	07.04 - 11.07		40	2	S90-2-20-016			91220016	100/4	56	M12x1,5	T	18
	07.04 - 11.07		50	7	S90-7-25-029			91725029	100/4	56	M12x1,5	T	18
	07.04 - 11.07		60	7	S90-7-30-020			91730020	100/4	56	M12x1,5	T	18
MINI Cabriolet (R57)													
MINI Convertible (R57)	11.07 -	S1-1-14-25-27-17	10	1	S90-1-05-025			91105025	100/4	56	M14x1,25	T	20
	11.07 -	M14x1,25x27, KG60°	24	2	S90-2-12-007			91212007	100/4	56	M14x1,25	T	20
	11.07 -		30	2	S90-2-15-027			91215027	100/4	56	M14x1,25	T	20
	11.07 -		40	2	S90-2-20-016			91220016	100/4	56	M14x1,25	T	20
MINI Clubman (R55)													
	10.07 -	S1-1-14-25-27-17	10	1	S90-1-05-025			91105025	100/4	56	M14x1,25	T	20
	10.07 -	M14x1,25x27, KG60°	24	2	S90-2-12-007			91212007	100/4	56	M14x1,25	T	20
	10.07 -		30	2	S90-2-15-027			91215027	100/4	56	M14x1,25	T	20
	10.07 -		40	2	S90-2-20-016			91220016	100/4	56	M14x1,25	T	20
MINI Countryman (R60)													
	06.10 -	S1-1-14-25-27-17	24	2	S90-2-12-002			91212002	120/5	72,5	M14x1,25	T	31
	06.10 -	M14x1,25x27, KG60°	30	2	S90-2-15-001			91215001	120/5	72,5	M14x1,25	T	31
MINI Coupe (R58)													
	09.11 -	S1-1-14-25-27-17	10	1	S90-1-05-025			91105025	100/4	56	M14x1,25	T	20
	09.11 -	M14x1,25x27, KG60°	24	2	S90-2-12-007			91212007	100/4	56	M14x1,25	T	20
	09.11 -		30	2	S90-2-15-027			91215027	100/4	56	M14x1,25	T	20
	09.11 -		40	2	S90-2-20-016			91220016	100/4	56	M14x1,25	T	20
MINI Paceman (R61)													
	04.12 -	S1-1-14-25-27-17	24	2	S90-2-12-002			91212002	120/5	72,5	M14x1,25	T	31
	04.12 -	M14x1,25x27, KG60°	30	2	S90-2-15-001			91215001	120/5	72,5	M14x1,25	T	31
MINI Roadster (R59)													
	02.12 -	S1-1-14-25-27-17	10	1	S90-1-05-025			91105025	100/4	56	M14x1,25	T	20
	02.12 -	M14x1,25x27, KG60°	24	2	S90-2-12-007			91212007	100/4	56	M14x1,25	T	20
	02.12 -		30	2	S90-2-15-027			91215027	100/4	56	M14x1,25	T	20
	02.12 -		40	2	S90-2-20-016			91220016	100/4	56	M14x1,25	T	20

MITSUBISHI

Modell | *Model*	Baujahr | *Year*	Original-radschraube (nicht bestellbar) | *Original Bolt (not available)*	Spurweiten-änd. Achse | *Total track widening* (mm)	Eibach System	Artikel-Nr. silber | *Part-No. silver*	Artikel-Nr. schwarz | *Part-No. black*	Hinweise | *Notes*	Kennzeichnung | *Stamping*	Lochkreis | - Anzahl | *Bolt pattern* | *No. of holes*	Zentrierung | *Centre bore* (mm)	Gewinde | *Thread*	Gutachten | *Homologation*	ET-Grenze | *Offset frontier*
ASX (GA_W_)													
	02.10 -		10	5	S90-5-05-027		S33	91505027	114,3/5	67	M12x1,5	T	16
	02.10 -		20	6	S90-6-10-002		S33	91610002	114,3/5	67	M12x1,5	T	16
	02.10 -		30	4	S90-4-15-002		S1	91415002	114,3/5	67	M12x1,5	T	16
	02.10 -		30	6	S90-6-15-023		S33	91615023	114,3/5	67	M12x1,5	T	16
	02.10 -		40	4	S90-4-20-001		S1	91420001	114,3/5	67	M12x1,5	T	16
	02.10 -		50	4	S90-4-25-016		S1	91425016	114,3/5	67	M12x1,5	T	16
	02.10 -		60	4	S90-4-30-015			91430015	114,3/5	67	M12x1,5	T	16
ASX Van (GA_W_)													
	06.10 -		10	5	S90-5-05-027		S33	91505027	114,3/5	67	M12x1,5	T	16
	06.10 -		20	6	S90-6-10-002		S33	91610002	114,3/5	67	M12x1,5	T	16
	06.10 -		30	4	S90-4-15-002		S1	91415002	114,3/5	67	M12x1,5	T	16
	06.10 -		30	6	S90-6-15-023		S33	91615023	114,3/5	67	M12x1,5	T	16
	06.10 -		40	4	S90-4-20-001		S1	91420001	114,3/5	67	M12x1,5	T	16
	06.10 -		50	4	S90-4-25-016		S1	91425016	114,3/5	67	M12x1,5	T	16
	06.10 -		60	4	S90-4-30-015			91430015	114,3/5	67	M12x1,5	T	16
COLT CZC Cabriolet (RG)													
COLT CZC Convertible (RG)	05.06 - 07.09		30	4	S90-4-15-006		S9, S23	91415006	114,3/4	67	M12x1,5	T	16
	05.06 - 07.09		50	4	S90-4-25-024		S9, S23	91425024	114,3/4	67	M12x1,5	T	16
	05.06 - 07.09		60	4	S90-4-30-011		S9, S23	91430011	114,3/4	67	M12x1,5	T	16
COLT VI (Z3_A, Z2_A)													
	10.02 - 06.12		30	4	S90-4-15-006		S9, S23	91415006	114,3/4	67	M12x1,5	T	16
	10.02 - 06.12		50	4	S90-4-25-024		S9, S23	91425024	114,3/4	67	M12x1,5	T	16
	10.02 - 06.12		60	4	S90-4-30-011		S9, S23	91430011	114,3/4	67	M12x1,5	T	16
L 200 (K7_T, K6_T)													
	01.96 - 12.07		50	8	S90-8-25-004		S9, S11	91825004	139,7/6	108,5	M12x1,5	T	-20
	01.96 - 12.07		60	8	S90-8-30-004		S9, S11	91830004	139,7/6	108,5	M12x1,5	T	-20
L 200 (KB_T, KA_T)													
	01.04 -		40	4	S90-4-20-028		S9	91420028	139,7/6	67	M12x1,5	T	8
	01.04 -		60	4	S90-4-30-038		S9	91430038	139,7/6	67	M12x1,5	T	8
LANCER SPORTBACK (CX_A)													
	10.07 -		20	6	S90-6-10-002		S33	91610002	114,3/5	67	M12x1,5	§21	
	10.07 -		30	6	S90-6-15-023		S33	91615023	114,3/5	67	M12x1,5	§21	
	10.07 -		40	4	S90-4-20-024		S9	91420001	114,3/5	67	M12x1,5	§21	
	10.07 -		40	6	S90-6-20-035		S33	91620028	114,3/5	67	M12x1,5	§21	
	10.07 -		50	4	S90-4-25-041		S9	91425016	114,3/5	67	M12x1,5	§21	
	10.07 -		60	4	S90-4-30-037		S9	91430015	114,3/5	67	M12x1,5	§21	
LANCER Stufenheck (CY/Z_A)													
LANCER Saloon (CY/Z_A)	03.07 -		20	6	S90-6-10-002		S33	91610002	114,3/5	67	M12x1,5	§21	
	03.07 -		30	6	S90-6-15-023		S33	91615023	114,3/5	67	M12x1,5	§21	
	03.07 -		40	4	S90-4-20-024		S9	91420001	114,3/5	67	M12x1,5	§21	
	03.07 -		40	6	S90-6-20-035		S33	91620028	114,3/5	67	M12x1,5	§21	
	03.07 -		50	4	S90-4-25-041		S9	91425016	114,3/5	67	M12x1,5	§21	
	03.07 -		60	4	S90-4-30-037		S9	91430015	114,3/5	67	M12x1,5	§21	
OUTLANDER I (CU_W)													
	03.01 - 12.06		10	5	S90-5-05-027		S11, S33	91505027	114,3/5	67	M12x1,5	T	31
	03.01 - 12.06		20	6	S90-6-10-002		S33	91610002	114,3/5	67	M12x1,5	T	31
	03.01 - 12.06		30	4	S90-4-15-002		S1, S9, S23	91415002	114,3/5	67	M12x1,5	T	31
	03.01 - 12.06		30	6	S90-6-15-023		S33	91615023	114,3/5	67	M12x1,5	T	31
	03.01 - 12.06		40	4	S90-4-20-001		S1, S9, S23	91420001	114,3/5	67	M12x1,5	T	31
	03.01 - 12.06		50	4	S90-4-25-016		S1, S9	91425016	114,3/5	67	M12x1,5	T	31
	03.01 - 12.06		60	4	S90-4-30-015		S1, S9	91430015	114,3/5	67	M12x1,5	§21	31
OUTLANDER II (CW_W)													
	11.06 - 12.12		30	4	S90-4-15-018		S9	91415002	114,3/5	67	M12x1,5	T	8
	11.06 - 12.12		40	4	S90-4-20-024		S9	91420001	114,3/5	67	M12x1,5	T	8
	11.06 - 12.12		50	4	S90-4-25-041		S9	91425016	114,3/5	67	M12x1,5	T	8
	11.06 - 12.12		60	4	S90-4-30-032		S9	91430015	114,3/5	67	M12x1,5	T	8
OUTLANDER II Van (CW_W)													
	12.06 - 11.12		30	4	S90-4-15-018		S9	91415002	114,3/5	67	M12x1,5	T	8
	12.06 - 11.12		40	4	S90-4-20-024		S9	91420001	114,3/5	67	M12x1,5	T	8
	12.06 - 11.12		50	4	S90-4-25-041		S9	91425016	114,3/5	67	M12x1,5	T	8
	12.06 - 11.12		60	4	S90-4-30-032		S9	91430015	114,3/5	67	M12x1,5	T	8
PAJERO II (V3_W, V2_W, V4_W)													
	12.90 - 10.99		50	8	S90-8-25-004		S9, S11	91825004	139,7/6	108,5	M12x1,5	T	-20
	12.90 - 10.99		60	8	S90-8-30-004		S9, S11	91830004	139,7/6	108,5	M12x1,5	T	-20
PAJERO II Canvas Top (V2_W, V4_W)													
PAJERO II Open Off-Road Vehicle (V2_W, V4_W)	12.90 - 04.00		50	8	S90-8-25-004		S9, S11	91825004	139,7/6	108,5	M12x1,5	T	-20
	12.90 - 04.00		60	8	S90-8-30-004		S9, S11	91830004	139,7/6	108,5	M12x1,5	T	-20
PAJERO III (V7_W, V6_W)													
	01.99 - 01.07		50	8	S90-8-25-004		S9, S11	91825004	139,7/6	108,5	M12x1,5	T	16
	01.99 - 01.07		60	8	S90-8-30-004		S9, S11	91830004	139,7/6	108,5	M12x1,5	T	16
PAJERO III Canvas Top (V6_W, V7_W)													
PAJERO III Open Off-Road Vehicle (V6_W, V7_W)	04.00 - 12.06		50	8	S90-8-25-004		S9, S11	91825004	139,7/6	108,5	M12x1,5	T	16
	04.00 - 12.06		60	8	S90-8-30-004		S9, S11	91830004	139,7/6	108,5	M12x1,5	T	16
PAJERO IV (V8_W, V9_W)													
	11.06 -		40	4	S90-4-20-028		S9	91420028	139,7/6	67	M12x1,5	T	16
	11.06 -		60	4	S90-4-30-038		S9	91430038	139,7/6	67	M12x1,5	T	16
PAJERO PININ (H6_W, H7_W)													
	03.99 - 06.07		10	5	S90-5-05-027		S33	91505027	114,3/5	67	M12x1,5	T	31
	03.99 - 06.07		20	6	S90-6-10-002		S33	91610002	114,3/5	67	M12x1,5	T	31
	03.99 - 06.07		30	4	S90-4-15-002		S1	91415002	114,3/5	67	M12x1,5	T	31
	03.99 - 06.07		30	6	S90-6-15-023		S33	91615023	114,3/5	67	M12x1,5	T	31
	03.99 - 06.07		40	4	S90-4-20-001		S1	91420001	114,3/5	67	M12x1,5	T	31
	03.99 - 06.07		50	4	S90-4-25-016		S1	91425016	114,3/5	67	M12x1,5	T	31
PAJERO SPORT (K90)													
	07.96 -		50	8	S90-8-25-004		S9, S11	91825004	139,7/6	108,5	M12x1,5	T	-20
	07.96 -		60	8	S90-8-30-004		S9, S11	91830004	139,7/6	108,5	M12x1,5	T	-20

NISSAN

Modell | *Model*	Baujahr | *Year*	Original-radschraube (nicht bestellbar) | *Original Bolt (not available)*	Spurweiten-änd. Achse | *Total track widening* (mm)	Eibach System	Artikel-Nr. silber | *Part-No. silver*	Artikel-Nr. schwarz | *Part-No. black*	Hinweise | *Notes*	Kennzeichnung | *Stamping*	Lochkreis | - Anzahl | *Bolt pattern* | *No. of holes*	Zentrierung | *Centre bore* (mm)	Gewinde | *Thread*	Gutachten | *Homologation*	ET-Grenze | *Offset frontier*
350 Z (Z33)													
	09.02 -		10	5	S90-5-05-030		S11, S16, S33	91505030	114,3/5	66	M12x1,25	T	5
	09.02 -		20	6	S90-6-10-004		S16, S33	91610004	114,3/5	66	M12x1,25	T	5
	09.02 -		30	4	S90-4-15-001		S9, S23	91415001	114,3/5	66	M12x1,25	T	5
	09.02 -		30	6	S90-6-15-026		S16, S33	91615026	114,3/5	66	M12x1,25	T	5
	09.02 -		40	4	S90-4-20-003		S9, S23	91420003	114,3/5	66	M12x1,25	T	5
	09.02 -		40	6	S90-6-20-019		S16, S33	91620019	114,3/5	66	M12x1,25	T	5
	09.02 -		50	4	S90-4-25-019		S9, S23	91425019	114,3/5	66	M12x1,25	T	5
350 Z Roadster (Z33)													
	10.03 -		10	5	S90-5-05-030		S11, S16, S33	91505030	114,3/5	66	M12x1,25	T	5
	10.03 -		20	6	S90-6-10-004		S16, S33	91610004	114,3/5	66	M12x1,25	T	5
	10.03 -		30	4	S90-4-15-001		S9, S23	91415001	114,3/5	66	M12x1,25	T	5
	10.03 -		30	6	S90-6-15-026		S16, S33	91615026	114,3/5	66	M12x1,25	T	5
	10.03 -		40	4	S90-4-20-003		S9, S23	91420003	114,3/5	66	M12x1,25	T	5
	10.03 -		40	6	S90-6-20-019		S16, S33	91620019	114,3/5	66	M12x1,25	T	5
	10.03 -		50	4	S90-4-25-019		S9, S23	91425019	114,3/5	66	M12x1,25	T	5
370 Z (Z34)													
	04.09 -		20	6	S90-6-10-004		S16, S33	91610004	114,3/5	66	M12x1,25	T	-15
	04.09 -		30	4	S90-4-15-026		S9, S23	91415001	114,3/5	66	M12x1,25	T	-15
	04.09 -		30	6	S90-6-15-026		S16, S33	91615026	114,3/5	66	M12x1,25	T	-15
	04.09 -		40	4	S90-4-20-034		S9, S23	91420003	114,3/5	66	M12x1,25	T	-15
	04.09 -		40	6	S90-6-20-019		S16, S33	91620019	114,3/5	66	M12x1,25	T	-15
	04.09 -		50	4	S90-4-25-050		S9, S23	91425019	114,3/5	66	M12x1,25	T	-15
	04.09 -		60	4	S90-4-30-043		S9, S23	91430036	114,3/5	66	M12x1,25	T	-15
370 Z Roadster (Z34)													
	01.09 -		20	6	S90-6-10-004		S16, S33	91610004	114,3/5	66	M12x1,25	T	-15
	01.09 -		30	4	S90-4-15-026		S9, S23	91415001	114,3/5	66	M12x1,25	T	-15
	01.09 -		30	6	S90-6-15-026		S16, S33	91615026	114,3/5	66	M12x1,25	T	-15
	01.09 -		40	4	S90-4-20-034		S9, S23	91420003	114,3/5	66	M12x1,25	T	-15
	01.09 -		40	6	S90-6-20-019		S16, S33	91620019	114,3/5	66	M12x1,25	T	-15
	01.09 -		50	4	S90-4-25-050		S9, S23	91425019	114,3/5	66	M12x1,25	T	-15
	01.09 -		60	4	S90-4-30-043		S9, S23	91430036	114,3/5	66	M12x1,25	T	-15
JUKE (F15)													
	06.10 -		20	6	S90-6-10-004		S16, S33	91610004	114,3/5	66	M12x1,25	T	15
	06.10 -		30	4	S90-4-15-026		S9, S23	91415001	114,3/5	66	M12x1,25	T	15
	06.10 -		30	6	S90-6-15-026		S16, S33	91615026	114,3/5	66	M12x1,25	T	15
	06.10 -		40	4	S90-4-20-034		S9, S23	91420003	114,3/5	66	M12x1,25	T	15
	06.10 -		40	6	S90-6-20-019		S16, S33	91620019	114,3/5	66	M12x1,25	T	15
	06.10 -		50	4	S90-4-25-050		S9, S23	91425019	114,3/5	66	M12x1,25	T	15
	06.10 -		60	4	S90-4-30-043		S9, S23	91430036	114,3/5	66	M12x1,25	T	15
MICRA C+C (K12)													
	08.05 -	S1-1-12-50-24-19	10	1	S90-1-05-003			91105003	100/4	60	M12x1,5	T	30
	08.05 -	M12x1,5x24, KG60°	32	2	S90-2-16-002		S6	91216002	100/4	60	M12x1,5	T	30
	08.05 -		40	2	S90-2-20-010			91220010	100/4	60	M12x1,5	T	30
	08.05 -		40	7	S90-7-20-026			91720026	100/4	60	M12x1,5	T	30
	08.05 -		50	7	S90-7-25-007			91725007	100/4	60	M12x1,5	T	30
MICRA III (K12)													
	01.03 - 06.10	S1-1-12-50-26-19	10	1	S90-1-05-003			91105003	100/4	60	M12x1,5	T	30
	01.03 - 06.10	M12x1,5x26, KG60°	32	2	S90-2-16-002		S6	91216002	100/4	60	M12x1,5	T	30
	01.03 - 06.10		40	2	S90-2-20-010			91220010	100/4	60	M12x1,5	T	30
	01.03 - 06.10		40	7	S90-7-20-026			91720026	100/4	60	M12x1,5	T	30
	01.03 - 06.10		50	7	S90-7-25-007			91725007	100/4	60	M12x1,5	T	30
MURANO (Z50)													
	08.03 -		20	6	S90-6-10-004		S16, S33	91610004	114,3/5	66	M12x1,25	§21	
	08.03 -		30	6	S90-6-15-026		S16, S33	91615026	114,3/5	66	M12x1,25	§21	
	08.03 -		40	4	S90-4-20-003		S9, S23	91420003	114,3/5	66	M12x1,25	§21	
	08.03 -		40	6	S90-6-20-019		S16, S33	91620019	114,3/5	66	M12x1,25	§21	
	08.03 -		50	4	S90-4-25-019		S9, S23	91425019	114,3/5	66	M12x1,25	§21	
NAVARA (D40)													
	10.04 -		30	4	S90-4-15-012		S9	91415012	114,3/6	66	M12x1,25	T	0
	10.04 -		40	4	S90-4-20-019		S9	91420019	114,3/6	66	M12x1,25	T	0
	10.04 -		54	4	S90-4-27-002		S9	91427002	114,3/6	66	M12x1,25	T	0
	10.04 -		60	4	S90-4-30-023		S9	91430023	114,3/6	66	M12x1,25	T	0
NAVARA Pritsche/ Fahrgestell (D40)													
NAVARA Platform/ Chassis (D40)	08.08 -		30	4	S90-4-15-012		S9	91415012	114,3/6	66	M12x1,25	T	0
	08.08 -		40	4	S90-4-20-019		S9	91420019	114,3/6	66	M12x1,25	T	0
	08.08 -		54	4	S90-4-27-002		S9	91427002	114,3/6	66	M12x1,25	T	0
	08.08 -		60	4	S90-4-30-023		S9	91430023	114,3/6	66	M12x1,25	T	0
NOTE (E11)													
	03.06 -	S1-1-12-50-24-19	10	1	S90-1-05-003		S6	91105003	100/4	60	M12x1,5	T	15
	03.06 -	M12x1,5x24, KG60°	32	2	S90-2-16-002		S56	91216002	100/4	60	M12x1,5	T	15
	03.06 -		40	2	S90-2-20-010			91220010	100/4	60	M12x1,5	T	15
	03.06 -		40	7	S90-7-20-026			91720026	100/4	60	M12x1,5	T	15
	03.06 -		50	7	S90-7-25-007			91725007	100/4	60	M12x1,5	T	15
PATHFINDER (R51)													
	01.05 -		30	4	S90-4-15-012		S9	91415012	114,3/6	66	M12x1,25	T	0
	01.05 -		40	4	S90-4-20-019		S9	91420019	114,3/6	66	M12x1,25	T	0
	01.05 -		54	4	S90-4-27-002		S9	91427002	114,3/6	66	M12x1,25	T	0
	01.05 -		60	4	S90-4-30-023		S9	91430023	114,3/6	66	M12x1,25	T	0
PATROL GR I (Y60, GR)													
	08.87 - 02.98		60	8	S90-8-30-003		S9, S11	91830003	139,7/6	106	M12x1,25	T	-25
PATROL GR II Wagon (Y61)													
	06.97 -		60	8	S90-8-30-003		S9, S11	91830003	139,7/6	106	M12x1,25	T	-25
PICK UP (D22)													
	01.97 -		60	8	S90-8-30-003		S9, S11	91830003	139,7/6	106	M12x1,25	T	0
Pulsar (N17)													
	08.12 -		20	6	S90-6-10-004		S16, S33	91610004	114,3/5	66	M12x1,25	T	10
	08.12 -		30	6	S90-6-15-026		S16, S33	91615026	114,3/5	66	M12x1,25	T	10
	08.12 -		30	4	S90-4-15-026		S9, S23	91415001	114,3/5	66	M12x1,25	T	10
	08.12 -		40	6	S90-6-20-019		S16, S33	91620019	114,3/5	66	M12x1,25	T	10
	08.12 -		40	4	S90-4-20-034		S9, S23	91420003	114,3/5	66	M12x1,25	T	10
	08.12 -		50	4	S90-4-25-050		S9, S23	91425019	114,3/5	66	M12x1,25	T	10
	08.12 -		60	4	S90-4-30-043		S9, S23	91430036	114,3/5	66	M12x1,25	T	10

Modell | *Model*	Baujahr | *Year*	Original-radschraube (nicht bestellbar) | *Original Bolt (not available)*	Spurweiten-änd. Achse | *Total track widening* (mm)	Eibach System	Artikel-Nr. silber | *Part-No. silver*	Artikel-Nr. schwarz | *Part-No. black*	Hinweise | *Notes*	Kennzeichnung | *Stamping*	Lochkreis | - Anzahl | *Bolt pattern* | *No. of holes*	Zentrierung | *Centre bore* (mm)	Gewinde | *Thread*	Gutachten | *Homologation*	ET-Grenze | *Offset frontier*
NISSAN													
QASHQAI / QASHQAI +2 (J10, JJ10)	02.07 -		20	6	S90-6-10-004		S16, S33	91610004	114,3/5	66	M12x1,25	T	15
	02.07 -		30	6	S90-6-15-026		S16, S33	91615026	114,3/5	66	M12x1,25	T	15
	02.07 -		40	4	S90-4-20-003		S9, S23	91420003	114,3/5	66	M12x1,25	T	15
	02.07 -		40	6	S90-6-20-019		S16, S33	91620019	114,3/5	66	M12x1,25	T	15
	02.07 -		50	4	S90-4-25-019		S9, S23	91425019	114,3/5	66	M12x1,25	T	15
QASHQAI (J11, J11_)													
	11.13 -	S1-1-12-50-22-17	32	2	S90-2-16-011	S90-2-16-011-B		91216011	114,3/5	66	M12x1,5	T	10
	11.13 -	M12x1,5x22, KG60°	40	2	S90-2-20-032			91220032	114,3/5	66	M12x1,5	T	10
	11.13 -		42	7	S90-7-21-012			91721010	114,3/5	66	M12x1,5	T	10
	11.13 -		50	7	S90-7-25-047			91725044	114,3/5	66	M12x1,5	T	10
	11.13 -		60	7	S90-7-30-055			91730052	114,3/5	66	M12x1,5	T	10
X-TRAIL (T30)													
	06.01 - 12.07		10	5	S90-5-05-030		S16, S33	91505030	114,3/5	66	M12x1,25	T	10
	06.01 - 12.07		20	6	S90-6-10-004		S16, S33	91610004	114,3/5	66	M12x1,25	T	10
	06.01 - 12.07		30	4	S90-4-15-001		S9, S23	91415001	114,3/5	66	M12x1,25	T	10
	06.01 - 12.07		30	6	S90-6-15-026		S16, S33	91615026	114,3/5	66	M12x1,25	T	10
	06.01 - 12.07		40	4	S90-4-20-003		S9, S23	91420003	114,3/5	66	M12x1,25	T	10
	06.01 - 12.07		40	6	S90-6-20-019		S16, S33	91620019	114,3/5	66	M12x1,25	T	10
	06.01 - 12.07		50	4	S90-4-25-019		S9, S23	91425019	114,3/5	66	M12x1,25	T	10
X-TRAIL (T31)													
	03.07 -		20	6	S90-6-10-004		S16, S33	91610004	114,3/5	66	M12x1,25	T	15
	03.07 -		30	6	S90-6-15-026		S16, S33	91615026	114,3/5	66	M12x1,25	T	15
	03.07 -		40	4	S90-4-20-003		S9, S23, S47	91420003	114,3/5	66	M12x1,25	T	15
	03.07 -		40	6	S90-6-20-019		S16, S33	91620019	114,3/5	66	M12x1,25	T	15
	03.07 -		50	4	S90-4-25-019		S9, S23	91425019	114,3/5	66	M12x1,25	T	15
	03.07 -		60	4	S90-4-30-036		S9, S23	91430036	114,3/5	66	M12x1,25	T	15
X-TRAIL (T32)													
	12.13 -		20	6	S90-6-10-004		S16, S33	91610004	114,3/5	66	M12x1,25	T	15
	12.13 -		30	6	S90-6-15-026		S16, S33	91615026	114,3/5	66	M12x1,25	T	15
	12.13 -		30	4	S90-4-15-001		S9, S23	91415001	114,3/5	66	M12x1,25	T	15
	12.13 -		40	6	S90-6-20-019		S16, S33	91620019	114,3/5	66	M12x1,25	T	15
	12.13 -		40	4	S90-4-20-003		S9, S23	91420003	114,3/5	66	M12x1,25	T	15
	12.13 -		50	4	S90-4-25-019		S9, S23	91425019	114,3/5	66	M12x1,25	T	15
	12.13 -		60	4	S90-4-30-036		S9, S23	91430036	114,3/5	66	M12x1,25	T	15
OPEL													
ADAM													
	10.12 -	S1-1-12-50-22-17	24	2	S90-2-12-006		S75	91212006	100/4	56,5	M12x1,5	T	9
	10.12 -	M12x1,5x22, KG60°	32	2	S90-2-16-004		S75	91216004	100/4	56,5	M12x1,5	T	9
	10.12 -		40	2	S90-2-20-002			91220002	100/4	56,5	M12x1,5	T	9
	10.12 -		50	7	S90-7-25-002			91725002	100/4	56,5	M12x1,5	T	9
ADAM S													
	10.12 -	S1-1-12-50-24-17	10	1	S90-1-05-013			91105013	110/5	65	M12x1,5	T	9
	10.12 -	M12x1,5x24, KG60°	20	1	S90-1-10-002		S11	91110002	110/5	65	M12x1,5	T	9
	10.12 -		32	2	S90-2-16-001		S5	91216001	110/5	65	M12x1,5	T	9
	10.12 -		40	2	S90-2-20-006			91220006	110/5	65	M12x1,5	T	9
ANTARA													
	05.06 -		42	4	S90-4-21-002		S9, S47	91421002	115/5	70,1	M12x1,5	T	16
	05.06 -		50	4	S90-4-25-043		S9, S47	91425043	115/5	70,1	M12x1,5	T	16
ASTRA F (56_, 57_)													
	09.91 - 09.98	S1-1-12-50-24-17	30	2	S90-2-15-012		S38	91215012	100/4	56,5	M12x1,5	T	24
	09.91 - 09.98	M12x1,5x24, KG60°	40	2	S90-2-20-002			91220002	100/4	56,5	M12x1,5	T	24
	09.91 - 09.98		50	7	S90-7-25-002			91725002	100/4	56,5	M12x1,5	T	24
ASTRA F Cabriolet (53_B)													
ASTRA F Convertible (53_B)	03.93 - 03.01	S1-1-12-50-24-17	30	2	S90-2-15-012		S38	91215012	100/4	56,5	M12x1,5	T	24
	03.93 - 03.01	M12x1,5x24, KG60°	40	2	S90-2-20-002			91220002	100/4	56,5	M12x1,5	T	24
	03.93 - 03.01		50	7	S90-7-25-002			91725002	100/4	56,5	M12x1,5	T	24
ASTRA F Caravan (51_, 52_)													
ASTRA F Estate (51_, 52_)	09.91 - 01.98	S1-1-12-50-24-17	30	2	S90-2-15-012		S38	91215012	100/4	56,5	M12x1,5	T	24
	09.91 - 01.98	M12x1,5x24, KG60°	40	2	S90-2-20-002			91220002	100/4	56,5	M12x1,5	T	24
	09.91 - 01.98		50	7	S90-7-25-002			91725002	100/4	56,5	M12x1,5	T	24
ASTRA F CC (53_, 54_, 58_, 59_)													
ASTRA F Hatchback (53_, 54_, 58_, 59_)	09.91 - 01.98	S1-1-12-50-24-17	30	2	S90-2-15-012		S38	91215012	100/4	56,5	M12x1,5	T	24
	09.91 - 01.98	M12x1,5x24, KG60°	40	2	S90-2-20-002			91220002	100/4	56,5	M12x1,5	T	24
	09.91 - 01.98		50	7	S90-7-25-002			91725002	100/4	56,5	M12x1,5	T	24
ASTRA F CLASSIC Caravan													
ASTRA F CLASSIC Estate	01.98 - 01.05	S1-1-12-50-24-17	30	2	S90-2-15-012		S38	91215012	100/4	56,5	M12x1,5	T	24
	01.98 - 01.05	M12x1,5x24, KG60°	40	2	S90-2-20-002			91220002	100/4	56,5	M12x1,5	T	24
	01.98 - 01.05		50	7	S90-7-25-002			91725002	100/4	56,5	M12x1,5	T	24
ASTRA G Cabriolet													
ASTRA G Convertible	03.01 - 10.05	S1-1-12-50-24-17	30	2	S90-2-15-012		S38	91215012	100/4	56,5	M12x1,5	T	19
	03.01 - 10.05	M12x1,5x24, KG60°	40	2	S90-2-20-002			91220002	100/4	56,5	M12x1,5	T	19
	03.01 - 10.05		50	7	S90-7-25-002			91725002	100/4	56,5	M12x1,5	T	19
ASTRA G Cabriolet													
ASTRA G Convertible	03.01 - 10.05	S1-1-12-50-24-17	10	1	S90-1-05-013			91105013	110/5	65	M12x1,5	T	19
	03.01 - 10.05	M12x1,5x24, KG60°	20	1	S90-1-10-002		S11	91110002	110/5	65	M12x1,5	T	19
	03.01 - 10.05		32	2	S90-2-16-001		S5	91216001	110/5	65	M12x1,5	T	19
	03.01 - 10.05		40	2	S90-2-20-006			91220006	110/5	65	M12x1,5	T	19
ASTRA G Caravan (F35_)													
ASTRA G Estate (F35_)	02.98 - 12.09	S1-1-12-50-24-17	30	2	S90-2-15-012		S38	91215012	100/4	56,5	M12x1,5	T	19
	02.98 - 12.09	M12x1,5x24, KG60°	40	2	S90-2-20-002			91220002	100/4	56,5	M12x1,5	T	19
	02.98 - 12.09		50	7	S90-7-25-002			91725002	100/4	56,5	M12x1,5	T	19
ASTRA G Caravan (F35_)													
ASTRA G Estate (F35_)	02.98 - 12.09	S1-1-12-50-24-17	10	1	S90-1-05-013			91105013	110/5	65	M12x1,5	T	19
	02.98 - 12.09	M12x1,5x24, KG60°	20	1	S90-1-10-002		S11	91110002	110/5	65	M12x1,5	T	19
	02.98 - 12.09		32	2	S90-2-16-001		S5	91216001	110/5	65	M12x1,5	T	19
	02.98 - 12.09		40	2	S90-2-20-006			91220006	110/5	65	M12x1,5	T	19
ASTRA G CC (F48_, F08_)													
ASTRA G Hatchback (F48_, F08_)	02.98 - 12.09	S1-1-12-50-24-17	30	2	S90-2-15-012		S38	91215012	100/4	56,5	M12x1,5	T	19
	02.98 - 12.09	M12x1,5x24, KG60°	40	2	S90-2-20-002			91220002	100/4	56,5	M12x1,5	T	19
	02.98 - 12.09		50	7	S90-7-25-002			91725002	100/4	56,5	M12x1,5	T	19
ASTRA G CC (F48_, F08_)													
ASTRA G Hatchback (F48_, F08_)	02.98 - 12.09	S1-1-12-50-24-17	10	1	S90-1-05-013			91105013	110/5	65	M12x1,5	T	19
	02.98 - 12.09	M12x1,5x24, KG60°	20	1	S90-1-10-002		S11	91110002	110/5	65	M12x1,5	T	19
	02.98 - 12.09		32	2	S90-2-16-001		S5	91216001	110/5	65	M12x1,5	T	19
	02.98 - 12.09		40	2	S90-2-20-006			91220006	110/5	65	M12x1,5	T	19

Modell | *Model*	Baujahr | *Year*	Original-radschraube (nicht bestellbar) | *Original Bolt (not available)*	Spurweiten-änd. Achse | *Total track widening* (mm)	Eibach System	Artikel-Nr. silber | *Part-No. silver*	Artikel-Nr. schwarz | *Part-No. black*	Hinweise | *Notes*	Kennzeichnung | *Stamping*	Lochkreis | - Anzahl | *Bolt pattern* | *No. of holes*	Zentrierung | *Centre bore* (mm)	Gewinde | *Thread*	Gutachten | *Homologation*	ET-Grenze | *Offset frontier*
OPEL													
ASTRA G Coupe (F07_)	03.00 - 05.05	S1-1-12-50-24-17	30	2	S90-2-15-012		S38	91215012	100/4	56,5	M12x1,5	T	19
	03.00 - 05.05	M12x1,5x24, KG60°	40	2	S90-2-20-002			91220002	100/4	56,5	M12x1,5	T	19
	03.00 - 05.05		50	7	S90-7-25-002			91725002	100/4	56,5	M12x1,5	T	19
ASTRA G Coupe (F07_)	03.00 - 05.05	S1-1-12-50-24-17	10	1	S90-1-05-013			91105013	110/5	65	M12x1,5	T	19
	03.00 - 05.05	M12x1,5x24, KG60°	20	1	S90-1-10-002		S11	91110002	110/5	65	M12x1,5	T	19
	03.00 - 05.05		32	2	S90-2-16-001		S5	91216001	110/5	65	M12x1,5	T	19
	03.00 - 05.05		40	2	S90-2-20-006			91220006	110/5	65	M12x1,5	T	19
ASTRA G Kasten (F70)													
ASTRA G Box (F70)	01.99 - 04.05	S1-1-12-50-24-17	30	2	S90-2-15-012		S38	91215012	100/4	56,5	M12x1,5	T	19
	01.99 - 04.05	M12x1,5x24, KG60°	40	2	S90-2-20-002			91220002	100/4	56,5	M12x1,5	T	19
	01.99 - 04.05		50	7	S90-7-25-002			91725002	100/4	56,5	M12x1,5	T	19
ASTRA G Kasten (F70)													
ASTRA G Box (F70)	01.99 - 04.05	S1-1-12-50-24-17	10	1	S90-1-05-013			91105013	110/5	65	M12x1,5	T	19
	01.99 - 04.05	M12x1,5x24, KG60°	20	1	S90-1-10-002		S11	91110002	110/5	65	M12x1,5	T	19
	01.99 - 04.05		32	2	S90-2-16-001		S5	91216001	110/5	65	M12x1,5	T	19
	01.99 - 04.05		40	2	S90-2-20-006			91220006	110/5	65	M12x1,5	T	19
ASTRA G Stufenheck (F69_)													
ASTRA G Saloon (F69_)	09.98 - 12.09	S1-1-12-50-24-17	30	2	S90-2-15-012		S38	91215012	100/4	56,5	M12x1,5	T	19
	09.98 - 12.09	M12x1,5x24, KG60°	40	2	S90-2-20-002			91220002	100/4	56,5	M12x1,5	T	19
	09.98 - 12.09		50	7	S90-7-25-002			91725002	100/4	56,5	M12x1,5	T	19
ASTRA G Stufenheck (F69_)													
ASTRA G Saloon (F69_)	09.98 - 12.09	S1-1-12-50-24-17	10	1	S90-1-05-013			91105013	110/5	65	M12x1,5	T	19
	09.98 - 12.09	M12x1,5x24, KG60°	20	1	S90-1-10-002		S11	91110002	110/5	65	M12x1,5	T	19
	09.98 - 12.09		32	2	S90-2-16-001		S5	91216001	110/5	65	M12x1,5	T	19
	09.98 - 12.09		40	2	S90-2-20-006			91220006	110/5	65	M12x1,5	T	19
ASTRA H (L48)	03.04 -	S1-1-12-50-22-17	40	2	S90-2-20-002			91220002	100/4	56,5	M12x1,5	T	5
	03.04 -	M12x1,5x22, KG60°	50	7	S90-7-25-002			91725002	100/4	56,5	M12x1,5	T	5
ASTRA H (L48)	03.04 -	S1-1-12-50-22-17	10	1	S90-1-05-013		S11	91105013	110/5	65	M12x1,5	T	5
	03.04 -	M12x1,5x22, KG60°	32	2	S90-2-16-001			91216001	110/5	65	M12x1,5	T	5
	03.04 -		40	2	S90-2-20-006			91220006	110/5	65	M12x1,5	T	5
ASTRA H Caravan (L35)													
ASTRA H Estate (L35)	08.04 -	S1-1-12-50-22-17	40	2	S90-2-20-002			91220002	100/4	56,5	M12x1,5	T	5
	08.04 -	M12x1,5x22, KG60°	50	7	S90-7-25-002			91725002	100/4	56,5	M12x1,5	T	5
ASTRA H Caravan (L35)													
ASTRA H Estate (L35)	08.04 -	S1-1-12-50-22-17	10	1	S90-1-05-013		S11	91105013	110/5	65	M12x1,5	T	5
	08.04 -	M12x1,5x22, KG60°	32	2	S90-2-16-001			91216001	110/5	65	M12x1,5	T	5
	08.04 -		40	2	S90-2-20-006			91220006	110/5	65	M12x1,5	T	5
ASTRA H GTC (L08)	03.05 -	S1-1-12-50-22-17	40	2	S90-2-20-002			91220002	100/4	56,5	M12x1,5	T	5
	03.05 -	M12x1,5x22, KG60°	50	7	S90-7-25-002			91725002	100/4	56,5	M12x1,5	T	5
ASTRA H GTC (L08)	03.05 -	S1-1-12-50-22-17	10	1	S90-1-05-013		S11	91105013	110/5	65	M12x1,5	T	5
	03.05 -	M12x1,5x22, KG60°	32	2	S90-2-16-001			91216001	110/5	65	M12x1,5	T	5
	03.05 -		40	2	S90-2-20-006			91220006	110/5	65	M12x1,5	T	5
ASTRA H Stufenheck (L69)													
ASTRA H Saloon (L69)	02.07 -	S1-1-12-50-22-17	40	2	S90-2-20-002			91220002	100/4	56,5	M12x1,5	T	5
	02.07 -	M12x1,5x22, KG60°	50	7	S90-7-25-002			91725002	100/4	56,5	M12x1,5	T	5
ASTRA H Stufenheck (L69)													
ASTRA H Saloon (L69)	02.07 -	S1-1-12-50-22-17	10	1	S90-1-05-013		S11	91105013	110/5	65	M12x1,5	T	5
	02.07 -	M12x1,5x22, KG60°	32	2	S90-2-16-001			91216001	110/5	65	M12x1,5	T	5
	02.07 -		40	2	S90-2-20-006			91220006	110/5	65	M12x1,5	T	5
ASTRA H TwinTop (L67)	09.05 -	S1-1-12-50-22-17	10	1	S90-1-05-013		S11	91105013	110/5	65	M12x1,5	T	5
	09.05 -	M12x1,5x22, KG60°	32	2	S90-2-16-001			91216001	110/5	65	M12x1,5	T	5
	09.05 -		40	2	S90-2-20-006			91220006	110/5	65	M12x1,5	T	5
ASTRA H Kasten (L70)													
ASTRA H Box (L70)	02.04 -	S1-1-12-50-22-17	40	2	S90-2-20-002			91220002	100/4	56,5	M12x1,5	T	5
	02.04 -	M12x1,5x22, KG60°	50	7	S90-7-25-002			91725002	100/4	56,5	M12x1,5	T	5
ASTRA H Kasten (L70)													
ASTRA H Box (L70)	02.04 -	S1-1-12-50-22-17	10	1	S90-1-05-013		S11	91105013	110/5	65	M12x1,5	T	5
	02.04 -	M12x1,5x22, KG60°	32	2	S90-2-16-001			91216001	110/5	65	M12x1,5	T	5
	02.04 -		40	2	S90-2-20-006			91220006	110/5	65	M12x1,5	T	5
ASTRA J	12.09 -		30	4	S90-4-15-028		S9	91415028	105/5	56,5	M12x1,5	T	9
	12.09 -		40	4	S90-4-20-036		S9	91420036	105/5	56,5	M12x1,5	T	9
	12.09 -		50	4	S90-4-25-052		S9	91425052	105/5	56,5	M12x1,5	T	9
	12.09 -		60	4	S90-4-30-045		S9	91430045	105/5	56,5	M12x1,5	T	9
ASTRA J	12.09 -		24	6	S90-6-12-004		S33	91612004	115/5	70,1	M12x1,5	T	9
	12.09 -		30	6	S90-6-15-049		S33	91615049	115/5	70,1	M12x1,5	T	9
	12.09 -		32	4	S90-4-16-004		S9, S47	91416004	115/5	70,1	M12x1,5	T	9
	12.09 -		40	6	S90-6-20-037		S33	91620037	115/5	70,1	M12x1,5	T	9
	12.09 -		42	4	S90-4-21-002		S9	91421002	115/5	70,1	M12x1,5	T	9
	12.09 -		50	4	S90-4-25-043		S9	91425043	115/5	70,1	M12x1,5	T	9
ASTRA J Stufenheck													
ASTRA J Saloon	06.12 -		30	4	S90-4-15-028		S9	91415028	105/5	56,5	M12x1,5	T	9
	06.12 -		40	4	S90-4-20-036		S9	91420036	105/5	56,5	M12x1,5	T	9
	06.12 -		50	4	S90-4-25-052		S9	91425052	105/5	56,5	M12x1,5	T	9
	06.12 -		60	4	S90-4-30-045		S9	91430045	105/5	56,5	M12x1,5	T	9
ASTRA J Stufenheck													
ASTRA J Saloon	06.12 -		24	6	S90-6-12-004		S33	91612004	115/5	70,1	M12x1,5	T	9
	06.12 -		30	6	S90-6-15-049		S33	91615049	115/5	70,1	M12x1,5	T	9
	06.12 -		32	4	S90-4-16-004		S9, S47	91416004	115/5	70,1	M12x1,5	T	9
	06.12 -		40	6	S90-6-20-037		S33	91620037	115/5	70,1	M12x1,5	T	9
	06.12 -		42	4	S90-4-21-002		S9	91421002	115/5	70,1	M12x1,5	T	9
	06.12 -		50	4	S90-4-25-043		S9	91425043	115/5	70,1	M12x1,5	T	9
ASTRA Sports Tourer (J)	10.10 -		30	4	S90-4-15-028		S9	91415028	105/5	56,5	M12x1,5	T	9
	10.10 -		40	4	S90-4-20-036		S9	91420036	105/5	56,5	M12x1,5	T	9
	10.10 -		50	4	S90-4-25-052		S9	91425052	105/5	56,5	M12x1,5	T	9
	10.10 -		60	4	S90-4-30-045		S9	91430045	105/5	56,5	M12x1,5	T	9

Modell | *Model*	Baujahr | *Year*	Original-radschraube (nicht bestellbar) | *Original Bolt (not available)*	Spurweiten-änd. Achse | *Total track widening* (mm)	Eibach System	Artikel-Nr. silber | *Part-No. silver*	Artikel-Nr. schwarz | *Part-No. black*	Hinweise | *Notes*	Kennzeich-nung | *Stamping*	Lochkreis | - Anzahl | *Bolt pattern* | *No. of holes*	Zentrierung | *Centre bore* (mm)	Gewinde | *Thread*	Gutachten | *Homologation*	ET-Grenze | *Offset frontier*
OPEL													
ASTRA Sports Tourer (J)													
	10.10 -		24	6	S90-6-12-004		S33	91612004	115/5	70,1	M12x1,5	T	9
	10.10 -		30	6	S90-6-15-049		S33	91615049	115/5	70,1	M12x1,5	T	9
	10.10 -		32	4	S90-4-16-004		S9, S47	91416004	115/5	70,1	M12x1,5	T	9
	10.10 -		40	6	S90-6-20-037		S33	91620037	115/5	70,1	M12x1,5	T	9
	10.10 -		42	4	S90-4-21-002		S9	91421002	115/5	70,1	M12x1,5	T	9
	10.10 -		50	4	S90-4-25-043		S9	91425043	115/5	70,1	M12x1,5	T	9
ASTRA GTC J													
	10.11 -		30	4	S90-4-15-028		S9	91415028	105/5	56,5	M12x1,5	T	9
	10.11 -		40	4	S90-4-20-036		S9	91420036	105/5	56,5	M12x1,5	T	9
	10.11 -		50	4	S90-4-25-052		S9	91425052	105/5	56,5	M12x1,5	T	9
	10.11 -		60	4	S90-4-30-045		S9	91430045	105/5	56,5	M12x1,5	T	9
ASTRA GTC J													
	10.11 -		24	6	S90-6-12-004		S33	91612004	115/5	70,1	M12x1,5	T	9
	10.11 -		30	6	S90-6-15-049		S33	91615049	115/5	70,1	M12x1,5	T	9
	10.11 -		32	4	S90-4-16-004		S9, S47	91416004	115/5	70,1	M12x1,5	T	9
	10.11 -		40	6	S90-6-20-037		S33	91620037	115/5	70,1	M12x1,5	T	9
	10.11 -		42	4	S90-4-21-002		S9	91421002	115/5	70,1	M12x1,5	T	9
	10.11 -		50	4	S90-4-25-043		S9	91425043	115/5	70,1	M12x1,5	T	9
CASCADA (W13)													
	03.13 -		30	4	S90-4-15-028		S9	91415028	105/5	56,5	M12x1,5	T	14
	03.13 -		40	4	S90-4-20-036		S9	91420036	105/5	56,5	M12x1,5	T	14
	03.13 -		50	4	S90-4-25-052		S9	91425052	105/5	56,5	M12x1,5	T	14
	03.13 -		60	4	S90-4-30-045		S9	91430045	105/5	56,5	M12x1,5	T	14
CASCADA (W13)													
	03.13 -		24	6	S90-6-12-004		S33	91612004	115/5	70,1	M12x1,5	T	14
	03.13 -		30	6	S90-6-15-049		S33	91615049	115/5	70,1	M12x1,5	T	14
	03.13 -		32	4	S90-4-16-004		S9, S47	91416004	115/5	70,1	M12x1,5	T	14
	03.13 -		40	6	S90-6-20-037		S33	91620037	115/5	70,1	M12x1,5	T	14
	03.13 -		42	4	S90-4-21-002		S9	91421002	115/5	70,1	M12x1,5	T	14
	03.13 -		50	4	S90-4-25-043		S9	91425043	115/5	70,1	M12x1,5	T	14
CORSA B (73_, 78_, 79_)													
	03.93 - 12.02	S1-1-12-50-24-17	30	2	S90-2-15-012		S38	91215012	100/4	56,5	M12x1,5	T	23
	03.93 - 12.02	M12x1,5x24, KG60°	40	2	S90-2-20-002			91220002	100/4	56,5	M12x1,5	T	23
	03.93 - 12.02		50	7	S90-7-25-002			91725002	100/4	56,5	M12x1,5	T	23
CORSA B Kasten (73_)													
CORSA B Box (73_)	08.99 - 09.00	S1-1-12-50-24-17	30	2	S90-2-15-012		S38	91215012	100/4	56,5	M12x1,5	T	23
	08.99 - 09.00	M12x1,5x24, KG60°	40	2	S90-2-20-002			91220002	100/4	56,5	M12x1,5	T	23
	08.99 - 09.00		50	7	S90-7-25-002			91725002	100/4	56,5	M12x1,5	T	23
CORSA B Kombi (F35)													
CORSA B Estate (F35)	01.99 -	S1-1-12-50-24-17	30	2	S90-2-15-012		S38	91215012	100/4	56,5	M12x1,5	T	23
	01.99 -	M12x1,5x24, KG60°	40	2	S90-2-20-002			91220002	100/4	56,5	M12x1,5	T	23
	01.99 -		50	7	S90-7-25-002			91725002	100/4	56,5	M12x1,5	T	23
CORSA C (F08, F68)													
	09.00 - 12.09	S1-1-12-50-24-17	30	2	S90-2-15-012		S38	91215012	100/4	56,5	M12x1,5	T	24
	09.00 - 12.09	M12x1,5x24, KG60°	40	2	S90-2-20-002			91220002	100/4	56,5	M12x1,5	T	24
	09.00 - 12.09		50	7	S90-7-25-002			91725002	100/4	56,5	M12x1,5	T	24
CORSA C Kasten (F08, W5L)													
CORSA C Box (F08, W5L)	09.00 -	S1-1-12-50-24-17	30	2	S90-2-15-012		S38	91215012	100/4	56,5	M12x1,5	T	24
	09.00 -	M12x1,5x24, KG60°	40	2	S90-2-20-002			91220002	100/4	56,5	M12x1,5	T	24
	09.00 -		50	7	S90-7-25-002			91725002	100/4	56,5	M12x1,5	T	24
CORSA D													
	07.06 -	S1-1-12-50-24-17	24	2	S90-2-12-006		S3	91212006	100/4	56,5	M12x1,5	T	9
	07.06 -	M12x1,5x24, KG60°	32	2	S90-2-16-004			91216004	100/4	56,5	M12x1,5	T	9
	07.06 -		40	2	S90-2-20-002			91220002	100/4	56,5	M12x1,5	T	9
	07.06 -		50	7	S90-7-25-002			91725002	100/4	56,5	M12x1,5	T	9
CORSA D													
	07.06 -	S1-1-12-50-22-17	10	1	S90-1-05-013		S11	91105013	110/5	65	M12x1,5	T	9
	07.06 -	M12x1,5x22, KG60°	30	2	S90-2-15-007			91215007	110/5	65	M12x1,5	T	9
	07.06 -		32	2	S90-2-16-001			91216001	110/5	65	M12x1,5	T	9
	07.06 -		40	2	S90-2-20-006			91220006	110/5	65	M12x1,5	T	9
CORSA D Van													
	07.06 -	S1-1-12-50-24-17	24	2	S90-2-12-006		S3	91212006	100/4	56,5	M12x1,5	T	9
	07.06 -	M12x1,5x24, KG60°	32	2	S90-2-16-004			91216004	100/4	56,5	M12x1,5	T	9
	07.06 -		40	2	S90-2-20-002			91220002	100/4	56,5	M12x1,5	T	9
	07.06 -		50	7	S90-7-25-002			91725002	100/4	56,5	M12x1,5	T	9
CORSA D Van													
	07.06 -	S1-1-12-50-22-17	10	1	S90-1-05-013		S11	91105013	110/5	65	M12x1,5	T	9
	07.06 -	M12x1,5x22, KG60°	30	2	S90-2-15-007			91215007	110/5	65	M12x1,5	T	9
	07.06 -		32	2	S90-2-16-001			91216001	110/5	65	M12x1,5	T	9
	07.06 -		40	2	S90-2-20-006			91220006	110/5	65	M12x1,5	T	9
CORSA E													
	09.14 -	S1-1-12-50-24-17	24	2	S90-2-12-006		S3	91212006	100/4	56,5	M12x1,5	T	9
	09.14 -	M12x1,5x24, KG60°	32	2	S90-2-16-004			91216004	100/4	56,5	M12x1,5	T	9
	09.14 -		40	2	S90-2-20-002			91220002	100/4	56,5	M12x1,5	T	9
	09.14 -		50	7	S90-7-25-002			91725002	100/4	56,5	M12x1,5	T	9
CORSA E													
	09.14 -	S1-1-12-50-22-17	10	1	S90-1-05-013		S11	91105013	110/5	65	M12x1,5	T	9
	09.14 -	M12x1,5x22, KG60°	30	2	S90-2-15-007			91215007	110/5	65	M12x1,5	T	9
	09.14 -		32	2	S90-2-16-001			91216001	110/5	65	M12x1,5	T	9
	09.14 -		40	2	S90-2-20-006			91220006	110/5	65	M12x1,5	T	9
CORSA E Van													
	09.14 -	S1-1-12-50-24-17	24	2	S90-2-12-006		S3	91212006	100/4	56,5	M12x1,5	T	9
	09.14 -	M12x1,5x24, KG60°	32	2	S90-2-16-004			91216004	100/4	56,5	M12x1,5	T	9
	09.14 -		40	2	S90-2-20-002			91220002	100/4	56,5	M12x1,5	T	9
	09.14 -		50	7	S90-7-25-002			91725002	100/4	56,5	M12x1,5	T	9
CORSA E Van													
	09.14 -	S1-1-12-50-22-17	10	1	S90-1-05-013		S11	91105013	110/5	65	M12x1,5	T	9
	09.14 -	M12x1,5x22, KG60°	30	2	S90-2-15-007			91215007	110/5	65	M12x1,5	T	9
	09.14 -		32	2	S90-2-16-001			91216001	110/5	65	M12x1,5	T	9
	09.14 -		40	2	S90-2-20-006			91220006	110/5	65	M12x1,5	T	9
FRONTERA A (5_MWL4)													
	03.92 - 10.98		50	8	S90-8-25-002		S9, S11	91825002	139,7/6	106,5	M12x1,5	T	-45
	03.92 - 10.98		60	8	S90-8-30-002		S9, S11	91830002	139,7/6	106,5	M12x1,5	T	-45
FRONTERA A Sport (5_SUD2)													
	03.92 - 10.98		50	8	S90-8-25-002		S9, S11	91825002	139,7/6	106,5	M12x1,5	T	-45
	03.92 - 10.98		60	8	S90-8-30-002		S9, S11	91830002	139,7/6	106,5	M12x1,5	T	-45

Modell | *Model*	Baujahr | *Year*	Original-radschraube (nicht bestellbar) | *Original Bolt (not available)*	Spurweiten-änd. Achse | *Total track widening* (mm)	Eibach System	Artikel-Nr. silber | *Part-No. silver*	Artikel-Nr. schwarz | *Part-No. black*	Hinweise | *Notes*	Kennzeich-nung | *Stamping*	Lochkreis | - Anzahl | *Bolt pattern* | *No. of holes*	Zentrierung | *Centre bore* (mm)	Gewinde | *Thread*	Gutachten | *Homologation*	ET-Grenze | *Offset frontier*
OPEL													
INSIGNIA													
	07.08 -		30	4	S90-4-15-025		S9	91415025	120/5	67	M14x1,5	T	6
	07.08 -		40	4	S90-4-20-032		S9	91420032	120/5	67	M14x1,5	T	6
	07.08 -		50	4	S90-4-25-048		S9	91425048	120/5	67	M14x1,5	T	6
	07.08 -		60	4	S90-4-30-042		S9	91430042	120/5	67	M14x1,5	T	6
	07.08 -		70	4	S90-4-35-009		S9	91435009	120/5	67	M14x1,5	T	6
INSIGNIA Sports Tourer													
	07.08 -		30	4	S90-4-15-025		S9	91415025	120/5	67	M14x1,5	T	6
	07.08 -		40	4	S90-4-20-032		S9	91420032	120/5	67	M14x1,5	T	6
	07.08 -		50	4	S90-4-25-048		S9	91425048	120/5	67	M14x1,5	T	6
	07.08 -		60	4	S90-4-30-042		S9	91430042	120/5	67	M14x1,5	T	6
	07.08 -		70	4	S90-4-35-009		S9	91435009	120/5	67	M14x1,5	T	6
INSIGNIA Stufenheck													
INSIGNIA Saloon	07.08 -		30	4	S90-4-15-025		S9	91415025	120/5	67	M14x1,5	T	6
	07.08 -		40	4	S90-4-20-032		S9	91420032	120/5	67	M14x1,5	T	6
	07.08 -		50	4	S90-4-25-048		S9	91425048	120/5	67	M14x1,5	T	6
	07.08 -		60	4	S90-4-30-042		S9	91430042	120/5	67	M14x1,5	T	6
	07.08 -		70	4	S90-4-35-009		S9	91435009	120/5	67	M14x1,5	T	6
MERIVA B													
	06.10 -	S1-1-12-50-22-17	10	1	S90-1-05-013		S11	91105013	110/5	65	M12x1,5	§21	
	06.10 -	M12x1,5x22, KG60°	32	2	S90-2-16-001			91216001	110/5	65	M12x1,5	§21	
	06.10 -		40	2	S90-2-20-006			91220006	110/5	65	M12x1,5	§21	
MOKKA													
	06.12 -		30	4	S90-4-15-028		S9	91415028	105/5	56,5	M12x1,5	T	8
	06.12 -		40	4	S90-4-20-036		S9	91420036	105/5	56,5	M12x1,5	T	8
	06.12 -		50	4	S90-4-25-052		S9	91425052	105/5	56,5	M12x1,5	T	8
	06.12 -		60	4	S90-4-30-045		S9	91430045	105/5	56,5	M12x1,5	T	8
MONTEREY A (UBS_)													
	09.91 - 07.98		50	8	S90-8-25-002		S9, S11	91825002	139,7/6	106,5	M12x1,5	T	-30
	09.91 - 07.98		60	8	S90-8-30-002		S9, S11	91830002	139,7/6	106,5	M12x1,5	T	-30
OMEGA B (25_, 26_, 27_)													
	03.94 - 07.03		10	1	S90-1-05-013			91105013	110/5	65	M12x1,5	T	18
	03.94 - 07.03		20	1	S90-1-10-002		S11	91110002	110/5	65	M12x1,5	T	18
	03.94 - 07.03		32	2	S90-2-16-001		S5	91216001	110/5	65	M12x1,5	T	18
	03.94 - 07.03		40	2	S90-2-20-006			91220006	110/5	65	M12x1,5	T	18
OMEGA B Caravan (21_, 22_, 23_)													
OMEGA B Estate (21_, 22_, 23_)	03.94 - 07.03		10	1	S90-1-05-013			91105013	110/5	65	M12x1,5	T	18
	03.94 - 07.03		20	1	S90-1-10-002		S11	91110002	110/5	65	M12x1,5	T	18
	03.94 - 07.03		32	2	S90-2-16-001		S5	91216001	110/5	65	M12x1,5	T	18
	03.94 - 07.03		40	2	S90-2-20-006			91220006	110/5	65	M12x1,5	T	18
SIGNUM													
	05.03 -		10	1	S90-1-05-013			91105013	110/5	65	M12x1,5	T	20
	05.03 -		20	1	S90-1-10-002		S11	91110002	110/5	65	M12x1,5	T	20
	05.03 -		32	2	S90-2-16-001		S5	91216001	110/5	65	M12x1,5	T	20
	05.03 -		40	2	S90-2-20-006			91220006	110/5	65	M12x1,5	T	20
VECTRA B (36_)													
	09.95 - 04.02	S1-1-12-50-24-17	30	2	S90-2-15-012		S38	91215012	100/4	56,5	M12x1,5	T	24
	09.95 - 04.02	M12x1,5x24, KG60°	40	2	S90-2-20-002			91220002	100/4	56,5	M12x1,5	T	24
	09.95 - 04.02		50	7	S90-7-25-002			91725002	100/4	56,5	M12x1,5	T	24
VECTRA B (36_)													
	09.95 - 04.02	S1-1-12-50-24-17	10	1	S90-1-05-013			91105013	110/5	65	M12x1,5	T	24
	09.95 - 04.02	M12x1,5x24, KG60°	20	1	S90-1-10-002		S11	91110002	110/5	65	M12x1,5	T	24
	09.95 - 04.02		32	2	S90-2-16-001		S5	91216001	110/5	65	M12x1,5	T	24
	09.95 - 04.02		40	2	S90-2-20-006			91220006	110/5	65	M12x1,5	T	24
VECTRA B Caravan (31_)													
VECTRA B Estate (31_)	11.96 - 07.03	S1-1-12-50-24-17	30	2	S90-2-15-012		S38	91215012	100/4	56,5	M12x1,5	T	24
	11.96 - 07.03	M12x1,5x24, KG60°	40	2	S90-2-20-002			91220002	100/4	56,5	M12x1,5	T	24
	11.96 - 07.03		50	7	S90-7-25-002			91725002	100/4	56,5	M12x1,5	T	24
VECTRA B Caravan (31_)													
VECTRA B Estate (31_)	11.96 - 07.03	S1-1-12-50-24-17	10	1	S90-1-05-013			91105013	110/5	65	M12x1,5	T	24
	11.96 - 07.03	M12x1,5x24, KG60°	20	1	S90-1-10-002		S11	91110002	110/5	65	M12x1,5	T	24
	11.96 - 07.03		32	2	S90-2-16-001		S5	91216001	110/5	65	M12x1,5	T	24
	11.96 - 07.03		40	2	S90-2-20-006			91220006	110/5	65	M12x1,5	T	24
VECTRA B CC (38_)													
VECTRA B Hatchback (38_)	10.95 - 07.03	S1-1-12-50-24-17	30	2	S90-2-15-012		S38	91215012	100/4	56,5	M12x1,5	T	24
	10.95 - 07.03	M12x1,5x24, KG60°	40	2	S90-2-20-002			91220002	100/4	56,5	M12x1,5	T	24
	10.95 - 07.03		50	7	S90-7-25-002			91725002	100/4	56,5	M12x1,5	T	24
VECTRA B CC (38_)													
VECTRA B Hatchback (38_)	10.95 - 07.03	S1-1-12-50-24-17	10	1	S90-1-05-013			91105013	110/5	65	M12x1,5	T	24
	10.95 - 07.03	M12x1,5x24, KG60°	20	1	S90-1-10-002		S11	91110002	110/5	65	M12x1,5	T	24
	10.95 - 07.03		32	2	S90-2-16-001		S5	91216001	110/5	65	M12x1,5	T	24
	10.95 - 07.03		40	2	S90-2-20-006			91220006	110/5	65	M12x1,5	T	24
VECTRA C													
	04.02 -	S1-1-12-50-22-17	10	1	S90-1-05-013			91105013	110/5	65	M12x1,5	T	20
	04.02 -	M12x1,5x22, KG60°	32	2	S90-2-16-001		S5	91216001	110/5	65	M12x1,5	T	20
	04.02 -		40	2	S90-2-20-006			91220006	110/5	65	M12x1,5	T	20
VECTRA C Caravan													
VECTRA C Estate	10.03 -	S1-1-12-50-22-17	10	1	S90-1-05-013			91105013	110/5	65	M12x1,5	T	20
	10.03 -	M12x1,5x22, KG60°	32	2	S90-2-16-001		S5	91216001	110/5	65	M12x1,5	T	20
	10.03 -		40	2	S90-2-20-006			91220006	110/5	65	M12x1,5	T	20
VECTRA C GTS													
	08.02 -	S1-1-12-50-22-17	10	1	S90-1-05-013			91105013	110/5	65	M12x1,5	T	20
	08.02 -	M12x1,5x22, KG60°	32	2	S90-2-16-001		S5	91216001	110/5	65	M12x1,5	T	20
	08.02 -		40	2	S90-2-20-006			91220006	110/5	65	M12x1,5	T	20
ZAFIRA A (F75_)													
	04.99 - 06.05		10	1	S90-1-05-013			91105013	110/5	65	M12x1,5	T	27
	04.99 - 06.05		30	2	S90-2-15-007		S17	91215007	110/5	65	M12x1,5	§21	27
	04.99 - 06.05		32	2	S90-2-16-001			91216001	110/5	65	M12x1,5	T	27
	04.99 - 06.05		40	2	S90-2-20-006			91220006	110/5	65	M12x1,5	§21	27
ZAFIRA B (A05)													
	07.05 -	S1-1-12-50-22-17	10	1	S90-1-05-013			91105013	110/5	65	M12x1,5	§21	
	07.05 -	M12x1,5x22, KG60°	32	2	S90-2-16-001			91216001	110/5	65	M12x1,5	§21	
	07.05 -		40	2	S90-2-20-006			91220006	110/5	65	M12x1,5	§21	
ZAFIRA B Van													
	07.05 -	S1-1-12-50-22-17	10	1	S90-1-05-013			91105013	110/5	65	M12x1,5	§21	
	07.05 -	M12x1,5x22, KG60°	32	2	S90-2-16-001			91216001	110/5	65	M12x1,5	§21	
	07.05 -		40	2	S90-2-20-006			91220006	110/5	65	M12x1,5	§21	

Modell | *Model*	Baujahr | *Year*	Original-radschraube (nicht bestellbar) | *Original Bolt (not available)*	Spurweiten-änd. Achse | *Total track widening* (mm)	Eibach System	Artikel-Nr. silber | *Part-No. silver*	Artikel-Nr. schwarz | *Part-No. black*	Hinweise | *Notes*	Kennzeich-nung | *Stamping*	Lochkreis | - Anzahl | *Bolt pattern* | *No. of holes*	Zentrierung | *Centre bore* (mm)	Gewinde | *Thread*	Gutachten | *Homologation*	ET-Grenze | *Offset frontier*
OPEL													
ZAFIRA Tourer C (P12)													
	10.11 -		24	6	S90-6-12-004		S33	91612004	115/5	70,1	M12x1,5	§21	
	10.11 -		30	6	S90-6-15-049		S33	91615049	115/5	70,1	M12x1,5	§21	
	10.11 -		32	4	S90-4-16-004		S9, S47	91416004	115/5	70,1	M12x1,5	§21	
	10.11 -		40	6	S90-6-20-037		S33	91620037	115/5	70,1	M12x1,5	§21	
	10.11 -		42	4	S90-4-21-002		S9	91421002	115/5	70,1	M12x1,5	§21	
	10.11 -		50	4	S90-4-25-043		S9	91425043	115/5	70,1	M12x1,5	§21	
PEUGEOT													
106 II (1)													
	04.96 -	S1-1-12-25-28-19	10	1	S90-1-05-012		S58	91105012	108/4	65	M12x1,25	T	5
	04.96 -	M12x1,25x28, KG60°	30	2	S90-2-15-008		S58	91215008	108/4	65	M12x1,25	T	5
107 (P)													
	06.05 -	S1-1-12-50-20-17	10	1	S90-1-05-028		S11, S58	91505008	100/4	54	M12x1,5	T	24
	06.05 -	M12x1,5x20, KG60°	30	2	S90-2-15-035		S58	91615010	100/4	54	M12x1,5	T	24
	06.05 -		40	2	S90-2-20-023		S58	91620026	100/4	54	M12x1,5	T	24
	06.05 -		50	7	S90-7-25-026			91725026	100/4	54	M12x1,5	T	24
108													
	05.14 -	S1-9-12-50-33-17	10	1	S90-1-05-028		S11, S58	91505008	100/4	54	M12x1,5	T	24
	05.14 -	M12x1,5x33, FB	30	2	S90-2-15-035		S58	91615010	100/4	54	M12x1,5	T	24
	05.14 -		40	2	S90-2-20-023		S58	91620026	100/4	54	M12x1,5	T	24
	05.14 -		50	7	S90-7-25-026			91725026	100/4	54	M12x1,5	T	24
205 I (741A/C)													
	02.83 - 10.87	S1-1-12-25-28-19	10	1	S90-1-05-012		S58	91105012	108/4	65	M12x1,25	T	4
	02.83 - 10.87	M12x1,25x28, KG60°	30	2	S90-2-15-008		S58	91215008	108/4	65	M12x1,25	T	4
205 I Cabriolet (741B, 20D)													
205 I Convertible (741B, 20D)	04.86 - 12.94	S1-1-12-25-28-19	10	1	S90-1-05-012		S58	91105012	108/4	65	M12x1,25	T	4
	04.86 - 12.94	M12x1,25x28, KG60°	30	2	S90-2-15-008		S58	91215008	108/4	65	M12x1,25	T	4
205 II (20A/C)													
	01.87 - 09.98	S1-1-12-25-28-19	10	1	S90-1-05-012		S58	91105012	108/4	65	M12x1,25	T	4
	01.87 - 09.98	M12x1,25x28, KG60°	30	2	S90-2-15-008		S58	91215008	108/4	65	M12x1,25	T	4
206 CC (2D)													
	09.00 -	S1-9-12-25-39-17	10	1	S90-1-05-012		S6, S58	91105012	108/4	65	M12x1,25	T	4
	09.00 -	M12x1,25x39, FB	20	2	S90-2-10-013		S58	91210013	108/4	65	M12x1,25	T	4
	09.00 -		30	2	S90-2-15-008		S58	91215008	108/4	65	M12x1,25	T	4
	09.00 -		40	2	S90-2-20-021		S58	91220021	108/4	65	M12x1,25	T	4
	09.00 -		50	7	S90-7-25-019			91725019	108/4	65	M12x1,25	T	4
	09.00 -		60	7	S90-7-30-009			91730009	108/4	65	M12x1,25	T	4
206 Schrägheck (2A/C)													
206 Hatchback (2A/C)	08.98 -	S1-9-12-25-39-17	10	1	S90-1-05-012		S6, S58	91105012	108/4	65	M12x1,25	T	4
	08.98 -	M12x1,25x39, FB	20	2	S90-2-10-013		S58	91210013	108/4	65	M12x1,25	T	4
	08.98 -		30	2	S90-2-15-008		S58	91215008	108/4	65	M12x1,25	T	4
	08.98 -		40	2	S90-2-20-021		S58	91220021	108/4	65	M12x1,25	T	4
	08.98 -		50	7	S90-7-25-019			91725019	108/4	65	M12x1,25	T	4
	08.98 -		60	7	S90-7-30-009			91730009	108/4	65	M12x1,25	T	4
206 Van													
	04.99 -	S1-9-12-25-39-17	10	1	S90-1-05-012		S6, S58	91105012	108/4	65	M12x1,25	T	4
	04.99 -	M12x1,25x39, FB	20	2	S90-2-10-013		S58	91210013	108/4	65	M12x1,25	T	4
	04.99 -		30	2	S90-2-15-008		S58	91215008	108/4	65	M12x1,25	T	4
	04.99 -		40	2	S90-2-20-021		S58	91220021	108/4	65	M12x1,25	T	4
	04.99 -		50	7	S90-7-25-019			91725019	108/4	65	M12x1,25	T	4
	04.99 -		60	7	S90-7-30-009			91730009	108/4	65	M12x1,25	T	4
206 Stufenheck (2A/C)													
206 Saloon (2A/C)	03.07 -	S1-9-12-25-39-17	10	1	S90-1-05-012		S6, S58	91105012	108/4	65	M12x1,25	T	4
	03.07 -	M12x1,25x39, FB	20	2	S90-2-10-013		S58	91210013	108/4	65	M12x1,25	T	4
	03.07 -		30	2	S90-2-15-008		S58	91215008	108/4	65	M12x1,25	T	4
	03.07 -		40	2	S90-2-20-021		S58	91220021	108/4	65	M12x1,25	T	4
	03.07 -		50	7	S90-7-25-019			91725019	108/4	65	M12x1,25	T	4
	03.07 -		60	7	S90-7-30-009			91730009	108/4	65	M12x1,25	T	4
206 SW (2E/K)													
	07.02 -	S1-9-12-25-39-17	10	1	S90-1-05-012		S6, S58	91105012	108/4	65	M12x1,25	T	4
	07.02 -	M12x1,25x39, FB	20	2	S90-2-10-013		S58	91210013	108/4	65	M12x1,25	T	4
	07.02 -		30	2	S90-2-15-008		S58	91215008	108/4	65	M12x1,25	T	4
	07.02 -		40	2	S90-2-20-021		S58	91220021	108/4	65	M12x1,25	T	4
	07.02 -		50	7	S90-7-25-019			91725019	108/4	65	M12x1,25	T	4
	07.02 -		60	7	S90-7-30-009			91730009	108/4	65	M12x1,25	T	4
206+ (T3E)													
	01.09 -	S1-9-12-25-36-17	10	1	S90-1-05-012		S58	91105012	108/4	65	M12x1,25	T	4
	01.09 -	M12x1,25x36, FB	20	2	S90-2-10-013		S58	91210013	108/4	65	M12x1,25	T	4
	01.09 -		30	2	S90-2-15-008		S58	91215008	108/4	65	M12x1,25	T	4
	01.09 -		40	2	S90-2-20-021		S58	91220021	108/4	65	M12x1,25	T	4
	01.09 -		50	7	S90-7-25-019			91725019	108/4	65	M12x1,25	T	4
	01.09 -		60	7	S90-7-30-009			91730009	108/4	65	M12x1,25	T	4
207 (WA_, WC_)													
	02.06 -	S1-9-12-25-36-17	10	1	S90-1-05-012		S6, S58	91105012	108/4	65	M12x1,25	T	-2
	02.06 -	M12x1,25x36, FB	20	2	S90-2-10-013		S58	91210013	108/4	65	M12x1,25	T	-2
	02.06 -		30	2	S90-2-15-008		S58	91215008	108/4	65	M12x1,25	T	-2
	02.06 -		40	2	S90-2-20-021		S58	91220021	108/4	65	M12x1,25	T	-2
	02.06 -		50	7	S90-7-25-019			91725019	108/4	65	M12x1,25	T	-2
	02.06 -		60	7	S90-7-30-009			91730009	108/4	65	M12x1,25	T	-2
207 CC (WD_)													
	02.07 -	S1-9-12-25-36-17	10	1	S90-1-05-012		S6, S58	91105012	108/4	65	M12x1,25	T	-2
	02.07 -	M12x1,25x36, FB	20	2	S90-2-10-013		S58	91210013	108/4	65	M12x1,25	T	-2
	02.07 -		30	2	S90-2-15-008		S58	91215008	108/4	65	M12x1,25	T	-2
	02.07 -		40	2	S90-2-20-021		S58	91220021	108/4	65	M12x1,25	T	-2
	02.07 -		50	7	S90-7-25-019			91725019	108/4	65	M12x1,25	T	-2
	02.07 -		60	7	S90-7-30-009			91730009	108/4	65	M12x1,25	T	-2
207 Stufenheck													
207 Saloon	12.07 -	S1-9-12-25-36-17	10	1	S90-1-05-012		S6, S58	91105012	108/4	65	M12x1,25	T	-2
	12.07 -	M12x1,25x36, FB	20	2	S90-2-10-013		S58	91210013	108/4	65	M12x1,25	T	-2
	12.07 -		30	2	S90-2-15-008		S58	91215008	108/4	65	M12x1,25	T	-2
	12.07 -		40	2	S90-2-20-021		S58	91220021	108/4	65	M12x1,25	T	-2
	12.07 -		50	7	S90-7-25-019			91725019	108/4	65	M12x1,25	T	-2
	12.07 -		60	7	S90-7-30-009			91730009	108/4	65	M12x1,25	T	-2
207 SW (WK_)													
	02.07 -	S1-9-12-25-36-17	10	1	S90-1-05-012		S6, S58	91105012	108/4	65	M12x1,25	T	-2
	02.07 -	M12x1,25x36, FB	20	2	S90-2-10-013		S58	91210013	108/4	65	M12x1,25	T	-2
	02.07 -		30	2	S90-2-15-008		S58	91215008	108/4	65	M12x1,25	T	-2
	02.07 -		40	2	S90-2-20-021		S58	91220021	108/4	65	M12x1,25	T	-2
	02.07 -		50	7	S90-7-25-019			91725019	108/4	65	M12x1,25	T	-2
	02.07 -		60	7	S90-7-30-009			91730009	108/4	65	M12x1,25	T	-2

Modell | *Model*	Baujahr | *Year*	Original-radschraube (nicht bestellbar) | *Original Bolt (not available)*	Spurweiten-änd. Achse | *Total track widening* (mm)	Eibach System	Artikel-Nr. silber | *Part-No. silver*	Artikel-Nr. schwarz | *Part-No. black*	Hinweise | *Notes*	Kennzeich-nung | *Stamping*	Lochkreis | - Anzahl | *Bolt pattern* | *No. of holes*	Zentrierung | *Centre bore* (mm)	Gewinde | *Thread*	Gutachten | *Homologation*	ET-Grenze | *Offset frontier*
PEUGEOT													
207 Van													
	04.07 -	S1-9-12-25-36-19	10	1	S90-1-05-012		S6, S58	91105012	108/4	65	M12x1,25	T	-2
	04.07 -	M12x1,25x36, FB	20	2	S90-2-10-013		S58	91210013	108/4	65	M12x1,25	T	-2
	04.07 -		30	2	S90-2-15-008		S58	91215008	108/4	65	M12x1,25	T	-2
	04.07 -		40	2	S90-2-20-021		S58	91220021	108/4	65	M12x1,25	T	-2
	04.07 -		50	7	S90-7-25-019			91725019	108/4	65	M12x1,25	T	-2
	04.07 -		60	7	S90-7-30-009			91730009	108/4	65	M12x1,25	T	-2
208													
	03.12 -	S1-9-12-25-36-17	20	2	S90-2-10-013		S58	91210013	108/4	65	M12x1,25	T	-3
	03.12 -	M12x1,25x36, FB	30	2	S90-2-15-008		S58	91215008	108/4	65	M12x1,25	T	-3
	03.12 -		40	2	S90-2-20-021		S58	91220021	108/4	65	M12x1,25	T	-3
	03.12 -		50	7	S90-7-25-019			91725019	108/4	65	M12x1,25	T	-3
	03.12 -		60	7	S90-7-30-009			91730009	108/4	65	M12x1,25	T	-3
306 (7B, N3, N5)													
	04.93 - 10.03	S1-1-12-25-28-19	10	1	S90-1-05-012		S58	91105012	108/4	65	M12x1,25	§21	
	04.93 - 10.03	M12x1,25x28, KG60°	30	2	S90-2-15-008		S58	91215008	108/4	65	M12x1,25	§21	
306 Cabriolet (7D, N3, N5)													
306 Convertible (7D, N3, N5)	03.94 - 04.02	S1-1-12-25-28-19	10	1	S90-1-05-012		S58	91105012	108/4	65	M12x1,25	§21	
	03.94 - 04.02	M12x1,25x28, KG60°	30	2	S90-2-15-008		S58	91215008	108/4	65	M12x1,25	§21	
306 Schrägheck (7A, 7C, N3, N5)													
306 Hatchback (7A, 7C, N3, N5)	04.93 - 10.03	S1-1-12-25-28-19	10	1	S90-1-05-012		S58	91105012	108/4	65	M12x1,25	§21	
	04.93 - 10.03	M12x1,25x28, KG60°	30	2	S90-2-15-008		S58	91215008	108/4	65	M12x1,25	§21	
307 (3A/C)													
	08.00 -	S1-9-12-25-35-17	10	1	S90-1-05-012		S11, S58	91105012	108/4	65	M12x1,25	T	12
	08.00 -	M12x1,25x35, FB	20	2	S90-2-10-013		S58	91210013	108/4	65	M12x1,25	T	12
	08.00 -		30	2	S90-2-15-008		S58	91215008	108/4	65	M12x1,25	T	12
	08.00 -		40	2	S90-2-20-021		S58	91220021	108/4	65	M12x1,25	T	12
	08.00 -		50	7	S90-7-25-019			91725019	108/4	65	M12x1,25	T	12
	08.00 -		60	7	S90-7-30-009			91730009	108/4	65	M12x1,25	T	12
307 Break (3E)													
	03.02 -	S1-9-12-25-35-17	10	1	S90-1-05-012		S11, S58	91105012	108/4	65	M12x1,25	T	12
	03.02 -	M12x1,25x35, FB	20	2	S90-2-10-013		S58	91210013	108/4	65	M12x1,25	T	12
	03.02 -		30	2	S90-2-15-008		S58	91215008	108/4	65	M12x1,25	T	12
	03.02 -		40	2	S90-2-20-021		S58	91220021	108/4	65	M12x1,25	T	12
	03.02 -		50	7	S90-7-25-019			91725019	108/4	65	M12x1,25	T	12
	03.02 -		60	7	S90-7-30-009			91730009	108/4	65	M12x1,25	T	12
307 CC (3B)													
	10.03 -	S1-9-12-25-35-17	10	1	S90-1-05-012		S11, S58	91105012	108/4	65	M12x1,25	T	12
	10.03 -	M12x1,25x35, FB	20	2	S90-2-10-013		S58	91210013	108/4	65	M12x1,25	T	12
	10.03 -		30	2	S90-2-15-008		S58	91215008	108/4	65	M12x1,25	T	12
	10.03 -		40	2	S90-2-20-021		S58	91220021	108/4	65	M12x1,25	T	12
	10.03 -		50	7	S90-7-25-019			91725019	108/4	65	M12x1,25	T	12
	10.03 -		60	7	S90-7-30-009			91730009	108/4	65	M12x1,25	T	12
307 SW (3H)													
	03.02 -	S1-9-12-25-35-17	10	1	S90-1-05-012		S11, S58	91105012	108/4	65	M12x1,25	T	12
	03.02 -	M12x1,25x35, FB	20	2	S90-2-10-013		S58	91210013	108/4	65	M12x1,25	T	12
	03.02 -		30	2	S90-2-15-008		S58	91215008	108/4	65	M12x1,25	T	12
	03.02 -		40	2	S90-2-20-021		S58	91220021	108/4	65	M12x1,25	T	12
	03.02 -		50	7	S90-7-25-019			91725019	108/4	65	M12x1,25	T	12
	03.02 -		60	7	S90-7-30-009			91730009	108/4	65	M12x1,25	T	12
308 (4A_, 4C_)													
	09.07 -	S1-9-12-25-36-17	10	1	S90-1-05-012		S6, S11, S58	91105012	108/4	65	M12x1,25	T	2
	09.07 -	M12x1,25x36, FB	20	2	S90-2-10-013		S58	91210013	108/4	65	M12x1,25	T	2
	09.07 -		30	2	S90-2-15-008		S58	91215008	108/4	65	M12x1,25	T	2
	09.07 -		40	2	S90-2-20-021		S58	91220021	108/4	65	M12x1,25	T	2
	09.07 -		50	7	S90-7-25-019			91725019	108/4	65	M12x1,25	T	2
	09.07 -		60	7	S90-7-30-009			91730009	108/4	65	M12x1,25	T	2
308 II													
	09.13 -	S1-9-12-25-36-17	20	2	S90-2-10-012		S58	91210012	108/5	65	M12x1,25	T	14
	09.13 -	M12x1,25x36, FB	30	2	S90-2-15-016		S58	91215016	108/5	65	M12x1,25	T	14
	09.13 -		40	2	S90-2-20-022		S58	91220022	108/5	65	M12x1,25	T	14
	09.13 -		42	7	S90-7-21-003			91721003	108/5	65	M12x1,25	T	14
308 CC													
	04.09 -	S1-9-12-25-36-17	10	1	S90-1-05-012		S6, S11, S58	91105012	108/4	65	M12x1,25	T	2
	04.09 -	M12x1,25x36, FB	20	2	S90-2-10-013		S58	91210013	108/4	65	M12x1,25	T	2
	04.09 -		30	2	S90-2-15-008		S58	91215008	108/4	65	M12x1,25	T	2
	04.09 -		40	2	S90-2-20-021		S58	91220021	108/4	65	M12x1,25	T	2
	04.09 -		50	7	S90-7-25-019			91725019	108/4	65	M12x1,25	T	2
	04.09 -		60	7	S90-7-30-009			91730009	108/4	65	M12x1,25	T	2
308 SW													
	09.07 -	S1-9-12-25-36-17	10	1	S90-1-05-012		S6, S11, S58	91105012	108/4	65	M12x1,25	T	2
	09.07 -	M12x1,25x36, FB	20	2	S90-2-10-013		S58	91210013	108/4	65	M12x1,25	T	2
	09.07 -		30	2	S90-2-15-008		S58	91215008	108/4	65	M12x1,25	T	2
	09.07 -		40	2	S90-2-20-021		S58	91220021	108/4	65	M12x1,25	T	2
	09.07 -		50	7	S90-7-25-019			91725019	108/4	65	M12x1,25	T	2
	09.07 -		60	7	S90-7-30-009			91730009	108/4	65	M12x1,25	T	2
308 SW II													
	03.14 -	S1-9-12-25-36-17	20	2	S90-2-10-012		S58	91210012	108/5	65	M12x1,25	T	14
	03.14 -	M12x1,25x36, FB	30	2	S90-2-15-016		S58	91215016	108/5	65	M12x1,25	T	14
	03.14 -		40	2	S90-2-20-022		S58	91220022	108/5	65	M12x1,25	T	14
	03.14 -		42	7	S90-7-21-003			91721003	108/5	65	M12x1,25	T	14
405 I (15B)													
	01.87 - 12.93	S1-1-12-25-28-19	10	1	S90-1-05-012		S58	91105012	108/4	65	M12x1,25	T	9
	01.87 - 12.93	M12x1,25x28, KG60°	30	2	S90-2-15-008		S58	91215008	108/4	65	M12x1,25	T	9
405 I Break (15E)													
	01.87 - 08.92	S1-1-12-25-28-19	10	1	S90-1-05-012		S58	91105012	108/4	65	M12x1,25	T	9
	01.87 - 08.92	M12x1,25x28, KG60°	30	2	S90-2-15-008		S58	91215008	108/4	65	M12x1,25	T	9
405 II (4B)													
	08.92 - 11.99	S1-1-12-25-28-19	10	1	S90-1-05-012		S58	91105012	108/4	65	M12x1,25	T	9
	08.92 - 11.99	M12x1,25x28, KG60°	30	2	S90-2-15-008		S58	91215008	108/4	65	M12x1,25	T	9
405 II Break (4E)													
	08.92 - 10.96	S1-1-12-25-28-19	10	1	S90-1-05-012		S58	91105012	108/4	65	M12x1,25	T	9
	08.92 - 10.96	M12x1,25x28, KG60°	30	2	S90-2-15-008		S58	91215008	108/4	65	M12x1,25	T	9

Modell | *Model*	Baujahr | *Year*	Original-radschraube (nicht bestellbar) | *Original Bolt (not available)*	Spurweiten-änd. Achse | *Total track widening* (mm)	Eibach System	Artikel-Nr. silber | *Part-No. silver*	Artikel-Nr. schwarz | *Part-No. black*	Hinweise | *Notes*	Kennzeichnung | *Stamping*	Lochkreis | - Anzahl | *Bolt pattern* | *No. of holes*	Zentrierung | *Centre bore* (mm)	Gewinde | *Thread*	Gutachten | *Homologation*	ET-Grenze | *Offset frontier*
PEUGEOT													
406 (8B)													
	10.95 - 01.05		10	1	S90-1-05-012		S58	91105012	108/4	65	M12x1,25	T	3
	10.95 - 01.05		30	2	S90-2-15-008		S58	91215008	108/4	65	M12x1,25	T	3
406 Break (8E/F)													
	10.96 - 10.04		10	1	S90-1-05-012		S58	91105012	108/4	65	M12x1,25	T	3
	10.96 - 10.04		30	2	S90-2-15-008		S58	91215008	108/4	65	M12x1,25	T	3
406 Coupe (8C)													
	09.97 - 12.04		10	1	S90-1-05-012		S58	91105012	108/4	65	M12x1,25	T	3
	09.97 - 12.04		30	2	S90-2-15-008		S58	91215008	108/4	65	M12x1,25	T	3
407 (6D_)													
	05.04 -	S1-9-12-25-37-17	10	1	S90-1-05-020		S11, S58	91105020	108/5	65	M12x1,25	T	29
	05.04 -	M12x1,25x37, FB	20	2	S90-2-10-012		S58	91210012	108/5	65	M12x1,25	T	29
	05.04 -		30	2	S90-2-15-016		S58	91215016	108/5	65	M12x1,25	T	29
	05.04 -		40	2	S90-2-20-022		S58	91220022	108/5	65	M12x1,25	T	29
	05.04 -		42	7	S90-7-21-003			91721003	108/5	65	M12x1,25	T	29
407 Coupe (6C_)													
	10.05 -	S1-9-12-25-37-17	10	1	S90-1-05-020		S11, S58	91105020	108/5	65	M12x1,25	T	29
	10.05 -	M12x1,25x37, FB	20	2	S90-2-10-012		S58	91210012	108/5	65	M12x1,25	T	29
	10.05 -		30	2	S90-2-15-016		S58	91215016	108/5	65	M12x1,25	T	29
	10.05 -		40	2	S90-2-20-022		S58	91220022	108/5	65	M12x1,25	T	29
	10.05 -		42	7	S90-7-21-003			91721003	108/5	65	M12x1,25	T	29
407 SW (6E_)													
	05.04 -	S1-9-12-25-37-17	10	1	S90-1-05-020		S11, S58	91105020	108/5	65	M12x1,25	T	29
	05.04 -	M12x1,25x37, FB	20	2	S90-2-10-012		S58	91210012	108/5	65	M12x1,25	T	29
	05.04 -		30	2	S90-2-15-016		S58	91215016	108/5	65	M12x1,25	T	29
	05.04 -		40	2	S90-2-20-022		S58	91220022	108/5	65	M12x1,25	T	29
	05.04 -		42	7	S90-7-21-003			91721003	108/5	65	M12x1,25	T	29
508													
	11.10 -	S1-9-12-25-37-17	20	2	S90-2-10-012		S58	91210012	108/5	65	M12x1,25	§21	
	11.10 -	M12x1,25x37, FB	30	2	S90-2-15-016		S58	91215016	108/5	65	M12x1,25	§21	
	11.10 -		40	2	S90-2-20-022		S58	91220022	108/5	65	M12x1,25	§21	
	11.10 -		42	7	S90-7-21-003			91721003	108/5	65	M12x1,25	§21	
508 SW													
	11.10 -	S1-9-12-25-37-17	20	2	S90-2-10-012		S58	91210012	108/5	65	M12x1,25	§21	
	11.10 -	M12x1,25x37, FB	30	2	S90-2-15-016		S58	91215016	108/5	65	M12x1,25	§21	
	11.10 -		40	2	S90-2-20-022		S58	91220022	108/5	65	M12x1,25	§21	
	11.10 -		42	7	S90-7-21-003			91721003	108/5	65	M12x1,25	§21	
1007 (KM_)													
	04.05 -	S1-9-12-25-36-17	10	1	S90-1-05-012		S6, S58	91105012	108/4	65	M12x1,25	T	9
	04.05 -	M12x1,25x36, FB	20	2	S90-2-10-013		S58	91210013	108/4	65	M12x1,25	T	9
	04.05 -		30	2	S90-2-15-008		S58	91215008	108/4	65	M12x1,25	T	9
	04.05 -		40	2	S90-2-20-021		S58	91220021	108/4	65	M12x1,25	T	9
	04.05 -		50	7	S90-7-25-019			91725019	108/4	65	M12x1,25	T	9
	04.05 -		60	7	S90-7-30-009			91730009	108/4	65	M12x1,25	T	9
2008													
	03.13 -	S1-9-12-25-36-17	20	2	S90-2-10-013		S58	91210013	108/4	65	M12x1,25	T	-10
	03.13 -	M12x1,25x36, FB	30	2	S90-2-15-008		S58	91215008	108/4	65	M12x1,25	T	-10
	03.13 -		40	2	S90-2-20-021		S58	91220021	108/4	65	M12x1,25	T	-10
	03.13 -		50	7	S90-7-25-019			91725019	108/4	65	M12x1,25	T	-10
	03.13 -		60	7	S90-7-30-009			91730009	108/4	65	M12x1,25	T	-10
3008													
	06.09 -	S1-9-12-25-36-17	20	2	S90-2-10-013		S58	91210013	108/4	65	M12x1,25	T	2
	06.09 -	M12x1,25x36, FB	30	2	S90-2-15-008		S58	91215008	108/4	65	M12x1,25	T	2
	06.09 -		40	2	S90-2-20-021		S58	91220021	108/4	65	M12x1,25	T	2
	06.09 -		50	7	S90-7-25-019			91725019	108/4	65	M12x1,25	T	2
	06.09 -		60	7	S90-7-30-009			91730009	108/4	65	M12x1,25	T	2
4007 (GP_)													
	02.07 -		30	4	S90-4-15-018		S9, S23	91415002	114,3/5	67	M12x1,5	T	8
	02.07 -		40	4	S90-4-20-024		S9, S23	91420001	114,3/5	67	M12x1,5	T	8
	02.07 -		50	4	S90-4-25-041		S9, S23	91425016	114,3/5	67	M12x1,5	T	8
	02.07 -		60	4	S90-4-30-032		S9	91430015	114,3/5	67	M12x1,5	T	8
4008													
	05.12 -		30	4	S90-4-15-002		S9	91415002	114,3/5	67	M12x1,5	T	13
	05.12 -		40	4	S90-4-20-001		S9	91420001	114,3/5	67	M12x1,5	T	13
	05.12 -		50	4	S90-4-25-016		S9	91425016	114,3/5	67	M12x1,5	T	13
	05.12 -		60	4	S90-4-30-015		S9	91430015	114,3/5	67	M12x1,5	T	13
RCZ (4J)													
	03.10 -	S1-9-12-25-37-17	20	2	S90-2-10-012		S58	91210012	108/5	65	M12x1,25	T	6
	03.10 -	M12x1,25x37, FB	30	2	S90-2-15-016		S58	91215016	108/5	65	M12x1,25	T	6
	03.10 -		40	2	S90-2-20-022		S58	91220022	108/5	65	M12x1,25	T	6
	03.10 -		42	7	S90-7-21-003			91721003	108/5	65	M12x1,25	T	6
PORSCHE													
911													
	01.63 - 11.90		14	6	S90-6-07-001		S25, S32, S40	91207001	130/5	71,5	M14x1,5	§21	
	01.63 - 11.90		30	6	S90-6-15-018		S33	91215018	130/5	71,5	M14x1,5	§21	
	01.63 - 11.90		36	6	S90-6-18-001		S33	91618001	130/5	71,5	M14x1,5	§21	
911 (964)													
	12.88 - 09.93		14	6	S90-6-07-001		S32, S40	91207001	130/5	71,5	M14x1,5	T	37
	12.88 - 09.93		30	6	S90-6-15-018		S33	91215018	130/5	71,5	M14x1,5	T	37
	12.88 - 09.93		36	6	S90-6-18-001		S33	91618001	130/5	71,5	M14x1,5	§21	37
911 (993)													
	10.93 - 09.97		14	6	S90-6-07-001		S32, S40	91207001	130/5	71,5	M14x1,5	T	20
	10.93 - 09.97		30	6	S90-6-15-018		S33	91215018	130/5	71,5	M14x1,5	T	20
	10.93 - 09.97		30	4	S90-4-15-020		S9	91415020	130/5	71,5	M14x1,5	T	20
	10.93 - 09.97		36	6	S90-6-18-001		S33	91618001	130/5	71,5	M14x1,5	T	20
	10.93 - 09.97		36	4	S90-4-18-001		S9	91418001	130/5	71,5	M14x1,5	T	20
	10.93 - 09.97		42	4	S90-4-21-001		S9	91421001	130/5	71,5	M14x1,5	T	20
	10.93 - 09.97		46	4	S90-4-23-002		S9	91423002	130/5	71,5	M14x1,5	T	20
	10.93 - 09.97		56	4	S90-4-28-001		S9	91428001	130/5	71,5	M14x1,5	T	20
	10.93 - 09.97		64	4	S90-4-32-001		S9	91432001	130/5	71,5	M14x1,5	T	20
911 (996)													
	09.97 - 08.05	S4-7-14-50-30-19	14	2	S90-2-07-001		S40	91207001	130/5	71,5	M14x1,5	T	22
	09.97 - 08.05	M14x1,5x30, KU r=14	30	2	S90-2-15-018			91215018	130/5	71,5	M14x1,5	T	22
	09.97 - 08.05		36	2	S90-2-18-001			91218001	130/5	71,5	M14x1,5	T	22
	09.97 - 08.05		36	7	S90-7-18-001		S46	91718001	130/5	71,5	M14x1,5	T	22
	09.97 - 08.05		42	7	S90-7-21-001			91721001	130/5	71,5	M14x1,5	T	22
	09.97 - 08.05		46	2	S90-2-23-001			91223001	130/5	71,5	M14x1,5	T	22
	09.97 - 08.05		46	7	S90-7-23-001			91723001	130/5	71,5	M14x1,5	T	22

Modell | *Model*	Baujahr | *Year*	Original-radschraube (nicht bestellbar) | *Original Bolt (not available)*	Spurweiten-änd. Achse | *Total track widening* (mm)	Eibach System	Artikel-Nr. silber | *Part-No. silver*	Artikel-Nr. schwarz | *Part-No. black*	Hinweise | *Notes*	Kennzeichnung | *Stamping*	Lochkreis | - Anzahl | *Bolt pattern* | *No. of holes*	Zentrierung | *Centre bore* (mm)	Gewinde | *Thread*	Gutachten | *Homologation*	ET-Grenze | *Offset frontier*
PORSCHE													
911 (997)													
	07.04 - 12.12	S4-7-14-50-30-19	14	2	S90-2-07-001		S40	91207001	130/5	71,5	M14x1,5	T	32
	07.04 - 12.12	M14x1,5x30, KU r=14	30	2	S90-2-15-018			91215018	130/5	71,5	M14x1,5	T	32
	07.04 - 12.12		36	2	S90-2-18-001			91218001	130/5	71,5	M14x1,5	T	32
	07.04 - 12.12		36	7	S90-7-18-001		S46	91718001	130/5	71,5	M14x1,5	T	32
	07.04 - 12.12		42	7	S90-7-21-001			91721001	130/5	71,5	M14x1,5	T	32
	07.04 - 12.12		46	2	S90-2-23-001			91223001	130/5	71,5	M14x1,5	T	32
	07.04 - 12.12		46	7	S90-7-23-001			91723001	130/5	71,5	M14x1,5	T	32
911 (991)													
	12.11 -	S4-7-14-50-30-19	14	2	S90-2-07-001		S40	91207001	130/5	71,5	M14x1,5	T	36
	12.11 -	M14x1,5x30, KU r=14	30	2	S90-2-15-018			91215018	130/5	71,5	M14x1,5	T	36
	12.11 -		36	2	S90-2-18-001			91218001	130/5	71,5	M14x1,5	§21	
	12.11 -		36	7	S90-7-18-001		S46	91718001	130/5	71,5	M14x1,5	§21	
	12.11 -		42	7	S90-7-21-001			91721001	130/5	71,5	M14x1,5	§21	
	12.11 -		46	2	S90-2-23-001			91223001	130/5	71,5	M14x1,5	§21	
	12.11 -		46	7	S90-7-23-001			91723001	130/5	71,5	M14x1,5	§21	
911 Cabriolet													
911 Convertible	08.82 - 08.89		14	6	S90-6-07-001		S25, S32, S40	91207001	130/5	71,5	M14x1,5	§21	
	08.82 - 08.89		30	6	S90-6-15-018		S33	91215018	130/5	71,5	M14x1,5	§21	
	08.82 - 08.89		36	6	S90-6-18-001		S33	91618001	130/5	71,5	M14x1,5	§21	
911 Cabriolet (964)													
911 Convertible (964)	05.89 - 06.94		14	6	S90-6-07-001		S32, S40	91207001	130/5	71,5	M14x1,5	T	37
	05.89 - 06.94		30	6	S90-6-15-018		S33	91215018	130/5	71,5	M14x1,5	T	37
	05.89 - 06.94		36	6	S90-6-18-001		S33	91618001	130/5	71,5	M14x1,5	§21	37
911 Cabriolet (993)													
911 Convertible (993)	07.94 - 09.97		14	6	S90-6-07-001		S32, S40	91207001	130/5	71,5	M14x1,5	T	20/7
	07.94 - 09.97		30	6	S90-6-15-018		S33	91215018	130/5	71,5	M14x1,5	T	20/7
	07.94 - 09.97		30	4	S90-4-15-020		S9	91415020	130/5	71,5	M14x1,5	T	20/7
	07.94 - 09.97		36	6	S90-6-18-001		S33	91618001	130/5	71,5	M14x1,5	T	20/7
	07.94 - 09.97		36	4	S90-4-18-001		S9	91418001	130/5	71,5	M14x1,5	T	20/7
	07.94 - 09.97		42	4	S90-4-21-001		S9	91421001	130/5	71,5	M14x1,5	T	20/7
	07.94 - 09.97		46	4	S90-4-23-002		S9	91423002	130/5	71,5	M14x1,5	T	20/7
	07.94 - 09.97		56	4	S90-4-28-001		S9	91428001	130/5	71,5	M14x1,5	T	20/7
	07.94 - 09.97		64	4	S90-4-32-001		S9	91432001	130/5	71,5	M14x1,5	T	20/7
911 Cabriolet (996)													
911 Convertible (996)	02.98 - 08.05	S4-7-14-50-30-19	14	2	S90-2-07-001		S40	91207001	130/5	71,5	M14x1,5	T	22/17
	02.98 - 08.05	M14x1,5x30, KU r=14	30	2	S90-2-15-018			91215018	130/5	71,5	M14x1,5	T	22/17
	02.98 - 08.05		36	2	S90-2-18-001			91218001	130/5	71,5	M14x1,5	T	22/17
	02.98 - 08.05		36	7	S90-7-18-001		S46	91718001	130/5	71,5	M14x1,5	T	22/17
	02.98 - 08.05		42	7	S90-7-21-001			91721001	130/5	71,5	M14x1,5	T	22/17
	02.98 - 08.05		46	2	S90-2-23-001			91223001	130/5	71,5	M14x1,5	T	22/17
	02.98 - 08.05		46	7	S90-7-23-001			91723001	130/5	71,5	M14x1,5	T	22/17
911 Cabriolet (997)													
911 Convertible (997)	04.05 - 12.12	S4-7-14-50-30-19	14	2	S90-2-07-001		S40	91207001	130/5	71,5	M14x1,5	T	35
	04.05 - 12.12	M14x1,5x30, KU r=14	30	2	S90-2-15-018			91215018	130/5	71,5	M14x1,5	T	35
	04.05 - 12.12		36	2	S90-2-18-001			91218001	130/5	71,5	M14x1,5	T	35
	04.05 - 12.12		36	7	S90-7-18-001		S46	91718001	130/5	71,5	M14x1,5	T	35
	04.05 - 12.12		42	7	S90-7-21-001			91721001	130/5	71,5	M14x1,5	T	35
	04.05 - 12.12		46	2	S90-2-23-001			91223001	130/5	71,5	M14x1,5	T	35
	04.05 - 12.12		46	7	S90-7-23-001			91723001	130/5	71,5	M14x1,5	T	35
911 Cabriolet (991)													
911 Convertible (991)	03.12 -	S4-7-14-50-30-19	14	2	S90-2-07-001		S40	91207001	130/5	71,5	M14x1,5	T	36
	03.12 -	M14x1,5x30, KU r=14	30	2	S90-2-15-018			91215018	130/5	71,5	M14x1,5	T	36
	03.12 -		36	2	S90-2-18-001			91218001	130/5	71,5	M14x1,5	§21	
	03.12 -		36	7	S90-7-18-001		S46	91718001	130/5	71,5	M14x1,5	§21	
	03.12 -		42	7	S90-7-21-001			91721001	130/5	71,5	M14x1,5	§21	
	03.12 -		46	2	S90-2-23-001			91223001	130/5	71,5	M14x1,5	§21	
	03.12 -		46	7	S90-7-23-001			91723001	130/5	71,5	M14x1,5	§21	
911 Targa													
	11.64 - 11.90		14	6	S90-6-07-001		S25, S32, S40	91207001	130/5	71,5	M14x1,5	§21	
	11.64 - 11.90		30	6	S90-6-15-018		S33	91215018	130/5	71,5	M14x1,5	§21	
	11.64 - 11.90		36	6	S90-6-18-001		S33	91618001	130/5	71,5	M14x1,5	§21	
911 Targa (993)													
	01.94 - 09.97		14	6	S90-6-07-001		S32, S40	91207001	130/5	71,5	M14x1,5	T	20/7
	01.94 - 09.97		30	6	S90-6-15-018		S33	91215018	130/5	71,5	M14x1,5	T	20/7
	01.94 - 09.97		30	4	S90-4-15-020		S9	91415020	130/5	71,5	M14x1,5	T	20/7
	01.94 - 09.97		36	6	S90-6-18-001		S33	91618001	130/5	71,5	M14x1,5	T	20/7
	01.94 - 09.97		36	4	S90-4-18-001		S9	91418001	130/5	71,5	M14x1,5	T	20/7
	01.94 - 09.97		42	4	S90-4-21-001		S9	91421001	130/5	71,5	M14x1,5	T	20/7
	01.94 - 09.97		46	4	S90-4-23-002		S9	91423002	130/5	71,5	M14x1,5	T	20/7
	01.94 - 09.97		56	4	S90-4-28-001		S9	91428001	130/5	71,5	M14x1,5	T	20/7
	01.94 - 09.97		64	4	S90-4-32-001		S9	91432001	130/5	71,5	M14x1,5	T	20/7
911 Targa (996)													
	12.01 - 08.05	S4-7-14-50-30-19	14	2	S90-2-07-001		S40	91207001	130/5	71,5	M14x1,5	T	22/17
	12.01 - 08.05	M14x1,5x30, KU r=14	30	2	S90-2-15-018			91215018	130/5	71,5	M14x1,5	T	22/17
	12.01 - 08.05		36	2	S90-2-18-001			91218001	130/5	71,5	M14x1,5	T	22/17
	12.01 - 08.05		36	7	S90-7-18-001		S46	91718001	130/5	71,5	M14x1,5	T	22/17
	12.01 - 08.05		42	7	S90-7-21-001			91721001	130/5	71,5	M14x1,5	T	22/17
	12.01 - 08.05		46	2	S90-2-23-001			91223001	130/5	71,5	M14x1,5	T	22/17
	12.01 - 08.05		46	7	S90-7-23-001			91723001	130/5	71,5	M14x1,5	T	22/17
911 Targa (997)													
	07.06 - 12.12	S4-7-14-50-30-19	14	2	S90-2-07-001		S40	91207001	130/5	71,5	M14x1,5	T	35
	07.06 - 12.12	M14x1,5x30, KU r=14	30	2	S90-2-15-018			91215018	130/5	71,5	M14x1,5	T	35
	07.06 - 12.12		36	2	S90-2-18-001			91218001	130/5	71,5	M14x1,5	T	35
	07.06 - 12.12		36	7	S90-7-18-001		S46	91718001	130/5	71,5	M14x1,5	T	35
	07.06 - 12.12		42	7	S90-7-21-001			91721001	130/5	71,5	M14x1,5	T	35
	07.06 - 12.12		46	2	S90-2-23-001			91223001	130/5	71,5	M14x1,5	T	35
	07.06 - 12.12		46	7	S90-7-23-001			91723001	130/5	71,5	M14x1,5	T	35
928													
	09.77 - 11.95		14	6	S90-6-07-001		S32, S40	91207001	130/5	71,5	M14x1,5	§21	
	09.77 - 11.95		30	6	S90-6-15-018		S33	91215018	130/5	71,5	M14x1,5	§21	
	09.77 - 11.95		36	6	S90-6-18-001		S33	91618001	130/5	71,5	M14x1,5	§21	

Modell | *Model*	Baujahr | *Year*	Original-radschraube (nicht bestellbar) | *Original Bolt (not available)*	Spurweiten-änd. Achse | *Total track widening* (mm)	Eibach System	Artikel-Nr. silber | *Part-No. silver*	Artikel-Nr. schwarz | *Part-No. black*	Hinweise | *Notes*	Kennzeichnung | *Stamping*	Lochkreis | - Anzahl | *Bolt pattern* | *No. of holes*	Zentrierung | *Centre bore* (mm)	Gewinde | *Thread*	Gutachten | *Homologation*	ET-Grenze | *Offset frontier*
PORSCHE													
944													
	06.81 - 07.91		14	6	S90-6-07-001		S6, S32, S40	91207001	130/5	71,5	M14x1,5	T	-12,4
	06.81 - 07.91		30	6	S90-6-15-018		S33	91215018	130/5	71,5	M14x1,5	T	-12,4
	06.81 - 07.91		30	4	S90-4-15-020		S9	91415020	130/5	71,5	M14x1,5	T	-12,4
	06.81 - 07.91		36	6	S90-6-18-001		S33	91618001	130/5	71,5	M14x1,5	T	-12,4
	06.81 - 07.91		36	4	S90-4-18-001		S9	91218001	130/5	71,5	M14x1,5	T	-12,4
	06.81 - 07.91		42	4	S90-4-21-001		S9	91621001	130/5	71,5	M14x1,5	T	-12,4
	06.81 - 07.91		46	4	S90-4-23-002		S9	91623002	130/5	71,5	M14x1,5	T	-12,4
944 Cabriolet													
944 Convertible	12.88 - 07.91		14	6	S90-6-07-001		S6, S32, S40	91207001	130/5	71,5	M14x1,5	T	-12,4
	12.88 - 07.91		30	6	S90-6-15-018		S33	91215018	130/5	71,5	M14x1,5	T	-12,4
	12.88 - 07.91		30	4	S90-4-15-020		S9	91415020	130/5	71,5	M14x1,5	T	-12,4
	12.88 - 07.91		36	6	S90-6-18-001		S33	91618001	130/5	71,5	M14x1,5	T	-12,4
	12.88 - 07.91		36	4	S90-4-18-001		S9	91218001	130/5	71,5	M14x1,5	T	-12,4
	12.88 - 07.91		42	4	S90-4-21-001		S9	91621001	130/5	71,5	M14x1,5	T	-12,4
	12.88 - 07.91		46	4	S90-4-23-002		S9	91623002	130/5	71,5	M14x1,5	T	-12,4
959													
	01.86 - 04.91		14	6	S90-6-07-001		S32, S40	91207001	130/5	71,5	M14x1,5	§21	
	01.86 - 04.91		30	6	S90-6-15-018		S33	91215018	130/5	71,5	M14x1,5	§21	
	01.86 - 04.91		36	6	S90-6-18-001		S33	91618001	130/5	71,5	M14x1,5	§21	
968 Coupe													
	06.91 - 11.95		14	6	S90-6-07-001		S32, S40	91207001	130/5	71,5	M14x1,5	T	33
	06.91 - 11.95		30	6	S90-6-15-018		S33	91215018	130/5	71,5	M14x1,5	T	33
	06.91 - 11.95		36	6	S90-6-18-001		S33	91618001	130/5	71,5	M14x1,5	§21	33
968 Cabriolet													
968 Convertible	06.91 - 11.95		14	6	S90-6-07-001		S32, S40	91207001	130/5	71,5	M14x1,5	T	33
	06.91 - 11.95		30	6	S90-6-15-018		S33	91215018	130/5	71,5	M14x1,5	T	33
	06.91 - 11.95		36	6	S90-6-18-001		S33	91618001	130/5	71,5	M14x1,5	§21	33
BOXSTER (986)													
	09.96 - 12.04	S4-7-14-50-30-19	14	2	S90-2-07-001		S22	91207001	130/5	71,5	M14x1,5	T	24
	09.96 - 12.04	M14x1,5x30, KU r=14	30	2	S90-2-15-018		S22	91215018	130/5	71,5	M14x1,5	T	24
	09.96 - 12.04		36	2	S90-2-18-001		S22	91218001	130/5	71,5	M14x1,5	T	24
	09.96 - 12.04		36	7	S90-7-18-001		S46	91718001	130/5	71,5	M14x1,5	T	24
	09.96 - 12.04		42	7	S90-7-21-001			91721001	130/5	71,5	M14x1,5	T	24
	09.96 - 12.04		46	2	S90-2-23-001		S22	91223001	130/5	71,5	M14x1,5	T	24
	09.96 - 12.04		46	7	S90-7-23-001			91723001	130/5	71,5	M14x1,5	T	24
BOXSTER (987)													
	11.04 - 12.11	S4-7-14-50-30-19	14	2	S90-2-07-001			91207001	130/5	71,5	M14x1,5	T	17
	11.04 - 12.11	M14x1,5x30, KU r=14	30	2	S90-2-15-018			91215018	130/5	71,5	M14x1,5	T	17
	11.04 - 12.11		36	2	S90-2-18-001			91218001	130/5	71,5	M14x1,5	T	17
	11.04 - 12.11		36	7	S90-7-18-001		S46	91718001	130/5	71,5	M14x1,5	T	17
	11.04 - 12.11		42	7	S90-7-21-001			91721001	130/5	71,5	M14x1,5	T	17
	11.04 - 12.11		46	2	S90-2-23-001			91223001	130/5	71,5	M14x1,5	T	17
	11.04 - 12.11		46	7	S90-7-23-001			91723001	130/5	71,5	M14x1,5	T	17
BOXSTER (981)													
	04.12 -	S4-7-14-50-30-19	14	2	S90-2-07-001			91207001	130/5	71,5	M14x1,5	T	32
	04.12 -	M14x1,5x30, KU r=14	30	2	S90-2-15-018			91215018	130/5	71,5	M14x1,5	T	32
	04.12 -		36	2	S90-2-18-001			91218001	130/5	71,5	M14x1,5	T	32
	04.12 -		36	7	S90-7-18-002		S46	91718001	130/5	71,5	M14x1,5	T	32
	04.12 -		42	7	S90-7-21-007		S46	91721001	130/5	71,5	M14x1,5	T	32
	04.12 -		46	2	S90-2-23-001			91223001	130/5	71,5	M14x1,5	§21	
	04.12 -		46	7	S90-7-23-002		S46	91723001	130/5	71,5	M14x1,5	§21	
CAYENNE (955)													
	09.02 - 09.10	S4-7-14-50-36-19	14	2	S90-2-07-001			91207001	130/5	71,5	M14x1,5	T	34
	09.02 - 09.10	M14x1,5x36, KU r=14	30	2	S90-2-15-018			91215018	130/5	71,5	M14x1,5	T	34
	09.02 - 09.10		36	2	S90-2-18-001			91218001	130/5	71,5	M14x1,5	T	34
	09.02 - 09.10		46	2	S90-2-23-001			91223001	130/5	71,5	M14x1,5	T	34
CAYENNE													
	06.10 -	S4-7-14-50-36-19	14	2	S90-2-07-001			91207001	130/5	71,5	M14x1,5	T	25
	06.10 -	M14x1,5x36, KU r=14	30	2	S90-2-15-018			91215018	130/5	71,5	M14x1,5	T	25
	06.10 -		36	2	S90-2-18-001			91218001	130/5	71,5	M14x1,5	T	25
	06.10 -		36	7	S90-7-18-002		S46	91718001	130/5	71,5	M14x1,5	T	25
	06.10 -		42	7	S90-7-21-007		S46	91721001	130/5	71,5	M14x1,5	T	25
	06.10 -		46	2	S90-2-23-001			91223001	130/5	71,5	M14x1,5	T	25
	06.10 -		46	7	S90-7-23-002		S46	91723001	130/5	71,5	M14x1,5	T	25
	06.10 -		50	7	S90-7-25-050		S46	91725050	130/5	71,5	M14x1,5	T	25
CAYMAN (987)													
	11.05 -	S4-7-14-50-30-19	14	2	S90-2-07-001			91207001	130/5	71,5	M14x1,5	T	19
	11.05 -	M14x1,5x30, KU r=14	30	2	S90-2-15-018		S22	91215018	130/5	71,5	M14x1,5	T	19
	11.05 -		36	2	S90-2-18-001		S22	91218001	130/5	71,5	M14x1,5	T	19
	11.05 -		36	7	S90-7-18-001		S46	91718001	130/5	71,5	M14x1,5	T	19
	11.05 -		42	7	S90-7-21-001			91721001	130/5	71,5	M14x1,5	T	19
	11.05 -		46	2	S90-2-23-001		S22	91223001	130/5	71,5	M14x1,5	T	19
	11.05 -		46	7	S90-7-23-001			91723001	130/5	71,5	M14x1,5	T	19
CAYMAN (981)													
	03.13 -	S4-7-14-50-30-19	14	2	S90-2-07-001			91207001	130/5	71,5	M14x1,5	T	32
	03.13 -	M14x1,5x30, KU r=14	30	2	S90-2-15-018			91215018	130/5	71,5	M14x1,5	T	32
	03.13 -		36	2	S90-2-18-001			91218001	130/5	71,5	M14x1,5	T	32
	03.13 -		36	7	S90-7-18-002		S46	91718001	130/5	71,5	M14x1,5	T	32
	03.13 -		42	7	S90-7-21-007		S46	91721001	130/5	71,5	M14x1,5	§21	
	03.13 -		46	2	S90-2-23-001			91223001	130/5	71,5	M14x1,5	§21	
	03.13 -		46	7	S90-7-23-002		S46	91723001	130/5	71,5	M14x1,5	§21	
MACAN													
	02.14 -	S4-7-14-50-30-19	24	2	S90-2-12-004	S90-2-12-004-B		91212004	112/5	66,45	M14x1,5	T	-4
	02.14 -	M14x1,5x30, KU r=14	30	2	S90-2-15-017	S90-2-15-017-B		91215017	112/5	66,45	M14x1,5	T	-4
	02.14 -		40	2	S90-2-20-007	S90-2-20-007-B		91220007	112/5	66,45	M14x1,5	T	-4
	02.14 -		40	7	S90-7-20-016	S90-7-20-016-B		91720016	112/5	66,45	M14x1,5	T	-4
	02.14 -		50	7	S90-7-25-016			91725016	112/5	66,45	M14x1,5	T	-4
	02.14 -		60	7	S90-7-30-007			91730007	112/5	66,45	M14x1,5	T	-4
PANAMERA													
	09.09 -	S4-7-14-50-30-19	14	2	S90-2-07-001		S40	91207001	130/5	71,5	M14x1,5	§21	
	09.09 -	M14x1,5x30, KU r=14	30	2	S90-2-15-018			91215018	130/5	71,5	M14x1,5	§21	
	09.09 -		36	2	S90-2-18-001			91218001	130/5	71,5	M14x1,5	§21	
	09.09 -		46	2	S90-2-23-001			91223001	130/5	71,5	M14x1,5	§21	
	09.09 -		36	7	S90-7-18-001		S46	91718001	130/5	71,5	M14x1,5	§21	
	09.09 -		42	7	S90-7-21-001			91721001	130/5	71,5	M14x1,5	§21	
	09.09 -		46	7	S90-7-23-001			91723001	130/5	71,5	M14x1,5	§21	

Modell | *Model*	Baujahr | *Year*	Original-radschraube (nicht bestellbar) | *Original Bolt (not available)*	Spurweiten-änd. Achse | *Total track widening* (mm)	Eibach System	Artikel-Nr. silber | *Part-No. silver*	Artikel-Nr. schwarz | *Part-No. black*	Hinweise | *Notes*	Kennzeichnung | *Stamping*	Lochkreis | - Anzahl | *Bolt pattern* | *No. of holes*	Zentrierung | *Centre bore* (mm)	Gewinde | *Thread*	Gutachten | *Homologation*	ET-Grenze | *Offset frontier*
RENAULT													
CAPTUR (R_)													
	06.13 -	S1-1-12-50-26-17	10	1	S90-1-05-003		S6	91105003	100/4	60	M12x1,5	T	10
	06.13 -	M12x1,5x26, KG60°	30	2	S90-2-15-014			91215014	100/4	60	M12x1,5	T	10
	06.13 -		32	2	S90-2-16-002			91216002	100/4	60	M12x1,5	T	10
	06.13 -		40	2	S90-2-20-010			91220010	100/4	60	M12x1,5	T	10
	06.13 -		40	7	S90-7-20-026			91720026	100/4	60	M12x1,5	T	10
	06.13 -		50	7	S90-7-25-007			91725007	100/4	60	M12x1,5	T	10
CLIO Grandtour (KR0/1_)													
	02.08 -	S1-1-12-50-23-17	10	1	S90-1-05-003		S6	91105003	100/4	60	M12x1,5	T	15
	02.08 -	M12x1,5x23, KG60°	32	2	S90-2-16-002			91216002	100/4	60	M12x1,5	T	15
	02.08 -		40	2	S90-2-20-010			91220010	100/4	60	M12x1,5	T	15
	02.08 -		40	7	S90-7-20-026			91720026	100/4	60	M12x1,5	T	15
	02.08 -		50	7	S90-7-25-007			91725007	100/4	60	M12x1,5	T	15
CLIO Grandtour IV													
	01.13 -	S1-1-12-50-26-17	10	1	S90-1-05-003		S6	91105003	100/4	60	M12x1,5	T	25
	01.13 -	M12x1,5x26, KG60°	32	2	S90-2-16-002			91216002	100/4	60	M12x1,5	T	25
	01.13 -		40	2	S90-2-20-010			91220010	100/4	60	M12x1,5	T	25
	01.13 -		40	7	S90-7-20-026			91720026	100/4	60	M12x1,5	T	25
	01.13 -		50	7	S90-7-25-007			91725007	100/4	60	M12x1,5	T	25
CLIO I (B/C57_, 5/357_)													
	05.90 - 09.98	S1-1-12-50-25-17	10	1	S90-1-05-003			91105003	100/4	60	M12x1,5	T	21
	05.90 - 09.98	M12x1,5x25, KG60°	30	2	S90-2-15-014			91215014	100/4	60	M12x1,5	T	21
	05.90 - 09.98		40	2	S90-2-20-010			91220010	100/4	60	M12x1,5	T	21
	05.90 - 09.98		50	7	S90-7-25-007			91725007	100/4	60	M12x1,5	T	21
CLIO II (BB0/1/2_, CB0/1/2_)													
	09.98 -	S1-1-12-50-25-17	10	1	S90-1-05-003			91105003	100/4	60	M12x1,5	T	21
	09.98 -	M12x1,5x25, KG60°	30	2	S90-2-15-014			91215014	100/4	60	M12x1,5	T	21
	09.98 -		32	2	S90-2-16-002			91216002	100/4	60	M12x1,5	T	21
	09.98 -		40	2	S90-2-20-010			91220010	100/4	60	M12x1,5	T	21
	09.98 -		50	7	S90-7-25-007			91725007	100/4	60	M12x1,5	T	21
CLIO II (BB0/1/2_, CB0/1/2_)													
	09.98 -	S1-1-12-50-25-19 M12x1,5x25, KG60°	30	2	S90-2-15-022			91215022	108/5	60	M12x1,5	T	21
CLIO III (BR0/1, CR0/1)													
	01.05 -	S1-1-12-50-25-19	10	1	S90-1-05-003		S6	91105003	100/4	60	M12x1,5	T	15
	01.05 -	M12x1,5x25, KG60°	32	2	S90-2-16-002			91216002	100/4	60	M12x1,5	T	15
	01.05 -		40	2	S90-2-20-010			91220010	100/4	60	M12x1,5	T	15
	01.05 -		40	7	S90-7-20-026			91720026	100/4	60	M12x1,5	T	15
	01.05 -		50	7	S90-7-25-007			91725007	100/4	60	M12x1,5	T	15
CLIO III (BR0/1, CR0/1)													
	01.05 -	S1-1-14-50-28-17	32	2	S90-2-16-003			91216003	108/5	60	M14x1,5	T	15
	01.05 -	M14x1,5x28, KG60°	40	2	S90-2-20-024			91220024	108/5	60	M14x1,5	T	15
	01.05 -		40	7	S90-7-20-014			91720014	108/5	60	M14x1,5	T	15
	01.05 -		50	7	S90-7-25-020			91725020	108/5	60	M14x1,5	T	15
CLIO IV													
	11.12 -	S1-1-12-50-26-17	10	1	S90-1-05-003		S6	91105003	100/4	60	M12x1,5	T	25
	11.12 -	M12x1,5x26, KG60°	32	2	S90-2-16-002			91216002	100/4	60	M12x1,5	T	25
	11.12 -		40	2	S90-2-20-010			91220010	100/4	60	M12x1,5	T	25
	11.12 -		40	7	S90-7-20-026			91720026	100/4	60	M12x1,5	T	25
	11.12 -		50	7	S90-7-25-007			91725007	100/4	60	M12x1,5	T	25
ESPACE II (J/S63_)													
	01.91 - 12.96	S4-1-12-50-26-19	10	1	S90-1-05-003			91105003	100/4	60	M12x1,5	T	27
	01.91 - 12.96	M12x1,5x26, KG60°	30	2	S90-2-15-014			91215014	100/4	60	M12x1,5	T	27
	01.91 - 12.96		50	7	S90-7-25-007			91725007	100/4	60	M12x1,5	§21	27
ESPACE IV (JK0/1_)													
	11.02 -	S4-1-12-50-26-19	40	7	S90-7-20-014			91720014	108/5	60	M14x1,5	T	35
	11.02 -	M12x1,5x26, KG60°	50	7	S90-7-25-020			91725020	108/5	60	M14x1,5	T	35
GRAND SCÉNIC II (JM0/1_)													
	04.04 -	S4-1-12-50-26-19	10	1	S90-1-05-003			91105003	100/4	60	M12x1,5	T	30
	04.04 -	M12x1,5x26, KG60°	30	2	S90-2-15-014			91215014	100/4	60	M12x1,5	T	30
	04.04 -		32	2	S90-2-16-002			91216002	100/4	60	M12x1,5	T	30
	04.04 -		40	2	S90-2-20-010			91220010	100/4	60	M12x1,5	T	30
	04.04 -		50	7	S90-7-25-007			91725007	100/4	60	M12x1,5	T	30
GRAND SCÉNIC III (JZ0/1_)													
	02.09 -	S4-1-12-50-25-17	10	1	S90-1-05-032			91105032	114,3/5	66	M12x1,5	§21	
	02.09 -	M12x1,5x25, KG60°	32	2	S90-2-16-011	S90-2-16-011-B		91216011	114,3/5	66	M12x1,5	§21	
	02.09 -		40	2	S90-2-20-032			91220032	114,3/5	66	M12x1,5	§21	
	02.09 -		42	7	S90-7-21-010			91721010	114,3/5	66	M12x1,5	§21	
	02.09 -		50	7	S90-7-25-044			91725044	114,3/5	66	M12x1,5	§21	
	02.09 -		60	7	S90-7-30-052			91730052	114,3/5	66	M12x1,5	§21	
KADJAR (RFE)													
	06.15 -	S1-1-12-50-24-17	32	2	S90-2-16-011	S90-2-16-011-B		91216011	114,3/5	66	M12x1,25	T	10
	06.15 -	M12x1,5x24, KG60°	40	2	S90-2-20-032			91220032	114,3/5	66	M12x1,25	T	10
	06.15 -		42	7	S90-7-21-012			91721010	114,3/5	66	M12x1,25	T	10
	06.15 -		50	7	S90-7-25-047			91725044	114,3/5	66	M12x1,25	T	10
	06.15 -		60	7	S90-7-30-055			91730052	114,3/5	66	M12x1,25	T	10
KOLEOS (HY_)													
	09.08 -		20	6	S90-6-10-004		S16, S33	91610004	114,3/5	66	M12x1,25	T	10
	09.08 -		30	4	S90-4-15-001		S9, S23	91415001	114,3/5	66	M12x1,25	T	10
	09.08 -		30	6	S90-6-15-026		S16, S33	91615026	114,3/5	66	M12x1,25	T	10
	09.08 -		40	4	S90-4-20-003		S9, S23	91420003	114,3/5	66	M12x1,25	T	10
	09.08 -		40	6	S90-6-20-019		S16, S33	91620019	114,3/5	66	M12x1,25	T	10
	09.08 -		50	4	S90-4-25-019		S9, S23	91425019	114,3/5	66	M12x1,25	T	10
	09.08 -		60	4	S90-4-30-036		S9, S23	91430036	114,3/5	66	M12x1,25	T	10
LAGUNA Coupe (DT0/1)													
	09.08 -	S4-1-14-50-28-17	10	1	S90-1-05-032			91105032	114,3/5	66	M14x1,5	§21	
	09.08 -	M14x1,5x28, KG60°	32	2	S90-2-16-011	S90-2-16-011-B		91216011	114,3/5	66	M14x1,5	§21	
	09.08 -		40	2	S90-2-20-032			91220032	114,3/5	66	M14x1,5	§21	
	09.08 -		42	7	S90-7-21-011			91721011	114,3/5	66	M14x1,5	§21	
	09.08 -		50	7	S90-7-25-045			91725045	114,3/5	66	M14x1,5	§21	
	09.08 -		60	7	S90-7-30-053			91730053	114,3/5	66	M14x1,5	§21	
LAGUNA II (BG0/1_)													
	03.01 -	S4-1-12-50-26-19	32	2	S90-2-16-003			91216003	108/5	60	M12x1,5	T	20
	03.01 -	M12x1,5x26, KG60°	40	2	S90-2-20-024			91220024	108/5	60	M12x1,5	T	20
	03.01 -		50	7	S90-7-25-024			91725024	108/5	60	M12x1,5	T	20
	03.01 -		60	7	S90-7-30-023			91730023	108/5	60	M12x1,5	T	20

Modell | *Model*	Baujahr | *Year*	Original-radschraube (nicht bestellbar) | *Original Bolt (not available)*	Spurweiten-änd. Achse | *Total track widening* (mm)	Eibach System	Artikel-Nr. silber | *Part-No. silver*	Artikel-Nr. schwarz | *Part-No. black*	Hinweise | *Notes*	Kennzeichnung | *Stamping*	Lochkreis | - Anzahl | *Bolt pattern* | *No. of holes*	Zentrierung | *Centre bore* (mm)	Gewinde | *Thread*	Gutachten | *Homologation*	ET-Grenze | *Offset frontier*
RENAULT													
LAGUNA II Grandtour (KG0/1_)	03.01 -	S4-1-12-50-26-19	32	2	S90-2-16-003			91216003	108/5	60	M12x1,5	T	20
	03.01 -	M12x1,5x26, KG60°	40	2	S90-2-20-024			91220024	108/5	60	M12x1,5	T	20
	03.01 -		50	7	S90-7-25-024			91725024	108/5	60	M12x1,5	T	20
	03.01 -		60	7	S90-7-30-023			91730023	108/5	60	M12x1,5	T	20
LAGUNA III (BT0/1)													
	10.07 -	S4-1-14-50-28-17	10	1	S90-1-05-032			91105032	114,3/5	66	M14x1,5	T	17
	10.07 -	M14x1,5x28, KG60°	32	2	S90-2-16-011	S90-2-16-011-B		91216011	114,3/5	66	M14x1,5	T	17
	10.07 -		40	2	S90-2-20-032			91220032	114,3/5	66	M14x1,5	T	17
	10.07 -		42	7	S90-7-21-011			91721011	114,3/5	66	M14x1,5	T	17
	10.07 -		50	7	S90-7-25-045			91725045	114,3/5	66	M14x1,5	T	17
	10.07 -		60	7	S90-7-30-053			91730053	114,3/5	66	M14x1,5	T	17
LAGUNA III Grandtour (KT0/1)													
	10.07 -	S4-1-14-50-28-17	10	1	S90-1-05-032			91105032	114,3/5	66	M14x1,5	T	17
	10.07 -	M14x1,5x28, KG60°	32	2	S90-2-16-011	S90-2-16-011-B		91216011	114,3/5	66	M14x1,5	T	17
	10.07 -		40	2	S90-2-20-032			91220032	114,3/5	66	M14x1,5	T	17
	10.07 -		42	7	S90-7-21-011			91721011	114,3/5	66	M14x1,5	T	17
	10.07 -		50	7	S90-7-25-045			91725045	114,3/5	66	M14x1,5	T	17
	10.07 -		60	7	S90-7-30-053			91730053	114,3/5	66	M14x1,5	T	17
MEGANE CC (EZ0/1_)													
	06.10 -	S4-1-12-50-25-17	10	1	S90-1-05-032			91105032	114,3/5	66	M12x1,5	T	17
	06.10 -	M12x1,5x25, KG60°	32	2	S90-2-16-011	S90-2-16-011-B		91216011	114,3/5	66	M12x1,5	T	17
	06.10 -		40	2	S90-2-20-032			91220032	114,3/5	66	M12x1,5	T	17
	06.10 -		42	7	S90-7-21-010			91721010	114,3/5	66	M12x1,5	T	17
	06.10 -		50	7	S90-7-25-044			91725044	114,3/5	66	M12x1,5	T	17
	06.10 -		60	7	S90-7-30-052			91730052	114,3/5	66	M12x1,5	T	17
MEGANE I (BA0/1_)													
	08.95 - 08.03	S1-1-12-50-26-19	10	1	S90-1-05-003			91105003	100/4	60	M12x1,5	T	18
	08.95 - 08.03	M12x1,5x26, KG60°	30	2	S90-2-15-014			91215014	100/4	60	M12x1,5	T	18
	08.95 - 08.03		40	2	S90-2-20-010			91220010	100/4	60	M12x1,5	T	18
	08.95 - 08.03		50	7	S90-7-25-007			91725007	100/4	60	M12x1,5	T	18
MEGANE I Cabriolet (EA0/1_)													
MEGANE I Convertible (EA0/1_)	10.96 - 08.03	S1-1-12-50-26-19	10	1	S90-1-05-003			91105003	100/4	60	M12x1,5	T	18
	10.96 - 08.03	M12x1,5x26, KG60°	30	2	S90-2-15-014			91215014	100/4	60	M12x1,5	T	18
	10.96 - 08.03		40	2	S90-2-20-010			91220010	100/4	60	M12x1,5	T	18
	10.96 - 08.03		50	7	S90-7-25-007			91725007	100/4	60	M12x1,5	T	18
MEGANE I Classic (LA0/1_)													
	09.96 - 08.03	S1-1-12-50-26-19	10	1	S90-1-05-003			91105003	100/4	60	M12x1,5	T	18
	09.96 - 08.03	M12x1,5x26, KG60°	30	2	S90-2-15-014			91215014	100/4	60	M12x1,5	T	18
	09.96 - 08.03		40	2	S90-2-20-010			91220010	100/4	60	M12x1,5	T	18
	09.96 - 08.03		50	7	S90-7-25-007			91725007	100/4	60	M12x1,5	T	18
MEGANE I Coach (DA0/1_)													
	03.96 - 08.03	S1-1-12-50-26-19	10	1	S90-1-05-003			91105003	100/4	60	M12x1,5	T	18
	03.96 - 08.03	M12x1,5x26, KG60°	30	2	S90-2-15-014			91215014	100/4	60	M12x1,5	T	18
	03.96 - 08.03		40	2	S90-2-20-010			91220010	100/4	60	M12x1,5	T	18
	03.96 - 08.03		50	7	S90-7-25-007			91725007	100/4	60	M12x1,5	T	18
MEGANE II (BM0/1_, CM0/1_)	11.02 - 01.11	S1-1-12-50-26-19	10	1	S90-1-05-003			91105003	100/4	60	M12x1,5	T	15
	11.02 - 01.11	M12x1,5x26, KG60°	30	2	S90-2-15-014			91215014	100/4	60	M12x1,5	T	15
	11.02 - 01.11		32	2	S90-2-16-002			91216002	100/4	60	M12x1,5	T	15
	11.02 - 01.11		40	2	S90-2-20-010			91220010	100/4	60	M12x1,5	T	15
	11.02 - 01.11		40	7	S90-7-20-026			91720026	100/4	60	M12x1,5	T	15
	11.02 - 01.11		50	7	S90-7-25-007			91725007	100/4	60	M12x1,5	T	15
MEGANE II (BM0/1_, CM0/1_)	11.02 - 01.11	S4-1-14-50-28-19	32	2	S90-2-16-003			91216003	108/5	60	M14x1,5	T	38
	11.02 - 01.11	M14x1,5x28, KG60°	40	2	S90-2-20-024			91220024	108/5	60	M14x1,5	T	38
	11.02 - 01.11		40	7	S90-7-20-014			91720014	108/5	60	M14x1,5	T	38
	11.02 - 01.11		50	7	S90-7-25-020			91725020	108/5	60	M14x1,5	T	38
MEGANE II Coupé-Cabriolet (EM0/1_)	09.03 - 12.09	S1-1-12-50-26-19	10	1	S90-1-05-003			91105003	100/4	60	M12x1,5	T	15
	09.03 - 12.09	M12x1,5x26, KG60°	30	2	S90-2-15-014			91215014	100/4	60	M12x1,5	T	15
	09.03 - 12.09		32	2	S90-2-16-002			91216002	100/4	60	M12x1,5	T	15
	09.03 - 12.09		40	2	S90-2-20-010			91220010	100/4	60	M12x1,5	T	15
	09.03 - 12.09		40	7	S90-7-20-026			91720026	100/4	60	M12x1,5	T	15
	09.03 - 12.09		50	7	S90-7-25-007			91725007	100/4	60	M12x1,5	T	15
MEGANE II Coupé-Cabriolet (EM0/1_)	09.03 - 12.09	S1-1-12-50-26-19	32	2	S90-2-16-003			91216003	108/5	60	M12x1,5	§21	
	09.03 - 12.09	M12x1,5x26, KG60°	40	2	S90-2-20-024			91220024	108/5	60	M12x1,5	§21	
	09.03 - 12.09		50	7	S90-7-25-024			91725024	108/5	60	M12x1,5	§21	
	09.03 - 12.09		60	7	S90-7-30-023			91730023	108/5	60	M12x1,5	§21	
MEGANE II Coupé-Cabriolet (EM0/1_)	09.03 - 12.09	S4-1-14-50-28-19	32	2	S90-2-16-003			91216003	108/5	60	M14x1,5	T	38
	09.03 - 12.09	M14x1,5x28, KG60°	40	2	S90-2-20-024			91220024	108/5	60	M14x1,5	T	38
	09.03 - 12.09		40	7	S90-7-20-014			91720014	108/5	60	M14x1,5	T	38
	09.03 - 12.09		50	7	S90-7-25-020			91725020	108/5	60	M14x1,5	T	38
MEGANE II Grandtour (KM0/1_)													
MEGANE II Station Wagon (KM0/1_)	08.03 - 08.12	S1-1-12-50-26-19	10	1	S90-1-05-003			91105003	100/4	60	M12x1,5	T	15
	08.03 - 08.12	M12x1,5x26, KG60°	30	2	S90-2-15-014			91215014	100/4	60	M12x1,5	T	15
	08.03 - 08.12		32	2	S90-2-16-002			91216002	100/4	60	M12x1,5	T	15
	08.03 - 08.12		40	2	S90-2-20-010			91220010	100/4	60	M12x1,5	T	15
	08.03 - 08.12		40	7	S90-7-20-026			91720026	100/4	60	M12x1,5	T	15
	08.03 - 08.12		50	7	S90-7-25-007			91725007	100/4	60	M12x1,5	T	15
MEGANE II Grandtour (KM0/1_)													
MEGANE II Station Wagon (KM0/1_)	08.03 - 08.12	S1-1-12-50-26-19	32	2	S90-2-16-003			91216003	108/5	60	M12x1,5	§21	
	08.03 - 08.12	M12x1,5x26, KG60°	40	2	S90-2-20-024			91220024	108/5	60	M12x1,5	§21	
	08.03 - 08.12		50	7	S90-7-25-024			91725024	108/5	60	M12x1,5	§21	
	08.03 - 08.12		60	7	S90-7-30-023			91730023	108/5	60	M12x1,5	§21	
MEGANE II Stufenheck (LM0/1_)	09.03 -	S1-1-12-50-26-19	10	1	S90-1-05-003			91105003	100/4	60	M12x1,5	T	15
MEGANE II Saloon (LM0/1_)	09.03 -	M12x1,5x26, KG60°	30	2	S90-2-15-014			91215014	100/4	60	M12x1,5	T	15
	09.03 -		32	2	S90-2-16-002			91216002	100/4	60	M12x1,5	T	15
	09.03 -		40	2	S90-2-20-010			91220010	100/4	60	M12x1,5	T	15
	09.03 -		40	7	S90-7-20-026			91720026	100/4	60	M12x1,5	T	15
	09.03 -		50	7	S90-7-25-007			91725007	100/4	60	M12x1,5	T	15

Modell | *Model*	Baujahr | *Year*	Original-radschraube (nicht bestellbar) | *Original Bolt (not available)*	Spurweiten-änd. Achse | *Total track widening* (mm)	Eibach System	Artikel-Nr. silber | *Part-No. silver*	Artikel-Nr. schwarz | *Part-No. black*	Hinweise | *Notes*	Kennzeichnung | *Stamping*	Lochkreis | - Anzahl | *Bolt pattern* | *No. of holes*	Zentrierung | *Centre bore* (mm)	Gewinde | *Thread*	Gutachten | *Homologation*	ET-Grenze | *Offset frontier*
RENAULT													
MEGANE III Coupe (DZ0/1_)	11.08 -	S4-1-12-50-25-17	10	1	S90-1-05-032			91105032	114,3/5	66	M12x1,5	T	17
	11.08 -	M12x1,5x25, KG60°	32	2	S90-2-16-011	S90-2-16-011-B		91216011	114,3/5	66	M12x1,5	T	17
	11.08 -		40	2	S90-2-20-032			91220032	114,3/5	66	M12x1,5	T	17
	11.08 -		42	7	S90-7-21-010			91721010	114,3/5	66	M12x1,5	T	17
	11.08 -		50	7	S90-7-25-044			91725044	114,3/5	66	M12x1,5	T	17
	11.08 -		60	7	S90-7-30-052			91730052	114,3/5	66	M12x1,5	T	17
MEGANE III Grandtour (KZ0/1)													
	11.08 -	S4-1-12-50-25-17	10	1	S90-1-05-032			91105032	114,3/5	66	M12x1,5	T	17
	11.08 -	M12x1,5x25, KG60°	32	2	S90-2-16-011	S90-2-16-011-B		91216011	114,3/5	66	M12x1,5	T	17
	11.08 -		40	2	S90-2-20-032			91220032	114,3/5	66	M12x1,5	T	17
	11.08 -		42	7	S90-7-21-010			91721010	114,3/5	66	M12x1,5	T	17
	11.08 -		50	7	S90-7-25-044			91725044	114,3/5	66	M12x1,5	T	17
	11.08 -		60	7	S90-7-30-052			91730052	114,3/5	66	M12x1,5	T	17
MEGANE III Schrägheck (BZ0_)													
MEGANE III Hatchback (BZ0_)	11.08 -	S4-1-12-50-25-17	10	1	S90-1-05-032			91105032	114,3/5	66	M12x1,5	T	17
	11.08 -	M12x1,5x25, KG60°	32	2	S90-2-16-011	S90-2-16-011-B		91216011	114,3/5	66	M12x1,5	T	17
	11.08 -		40	2	S90-2-20-032			91220032	114,3/5	66	M12x1,5	T	17
	11.08 -		42	7	S90-7-21-010			91721010	114,3/5	66	M12x1,5	T	17
	11.08 -		50	7	S90-7-25-044			91725044	114,3/5	66	M12x1,5	T	17
	11.08 -		60	7	S90-7-30-052			91730052	114,3/5	66	M12x1,5	T	17
MEGANE III Stufenheck													
MEGANE III Saloon	06.09 -	S4-1-12-50-25-17	10	1	S90-1-05-032			91105032	114,3/5	66	M12x1,5	T	17
	06.09 -	M12x1,5x25, KG60°	32	2	S90-2-16-011	S90-2-16-011-B		91216011	114,3/5	66	M12x1,5	T	17
	06.09 -		40	2	S90-2-20-032			91220032	114,3/5	66	M12x1,5	T	17
	06.09 -		42	7	S90-7-21-010			91721010	114,3/5	66	M12x1,5	T	17
	06.09 -		50	7	S90-7-25-044			91725044	114,3/5	66	M12x1,5	T	17
	06.09 -		60	7	S90-7-30-052			91730052	114,3/5	66	M12x1,5	T	17
MEGANE Scenic (JA0/1_)	10.96 - 10.99	S1-1-12-50-26-19	10	1	S90-1-05-003			91105003	100/4	60	M12x1,5	T	21
	10.96 - 10.99	M12x1,5x26, KG60°	30	2	S90-2-15-014			91215014	100/4	60	M12x1,5	T	21
	10.96 - 10.99		50	7	S90-7-25-007			91725007	100/4	60	M12x1,5	§21	21
SCÉNIC I (JA0/1_)	09.99 - 09.03		10	1	S90-1-05-003			91105003	100/4	60	M12x1,5	T	21
	09.99 - 09.03		30	2	S90-2-15-014			91215014	100/4	60	M12x1,5	T	21
	09.99 - 09.03		50	7	S90-7-25-007			91725007	100/4	60	M12x1,5	§21	21
SCÉNIC II (JM0/1_)	06.03 -		10	1	S90-1-05-003			91105003	100/4	60	M12x1,5	T	30
	06.03 -		30	2	S90-2-15-014			91215014	100/4	60	M12x1,5	T	30
	06.03 -		32	2	S90-2-16-002			91216002	100/4	60	M12x1,5	T	30
	06.03 -		40	2	S90-2-20-010			91220010	100/4	60	M12x1,5	T	30
	06.03 -		50	7	S90-7-25-007			91725007	100/4	60	M12x1,5	T	30
SCÉNIC III (JZ0/1_)	02.09 -	S4-1-12-50-25-17	10	1	S90-1-05-032			91105032	114,3/5	66	M12x1,5	§21	
	02.09 -	M12x1,5x25, KG60°	32	2	S90-2-16-011	S90-2-16-011-B		91216011	114,3/5	66	M12x1,5	§21	
	02.09 -		40	2	S90-2-20-032			91220032	114,3/5	66	M12x1,5	§21	
	02.09 -		42	7	S90-7-21-010			91721010	114,3/5	66	M12x1,5	§21	
	02.09 -		50	7	S90-7-25-044			91725044	114,3/5	66	M12x1,5	§21	
	02.09 -		60	7	S90-7-30-052			91730052	114,3/5	66	M12x1,5	§21	
TWINGO I (C06_)	03.93 -	S1-1-12-50-25-17	10	1	S90-1-05-003			91105003	100/4	60	M12x1,5	T	20
	03.93 -	M12x1,5x25, KG60°	30	2	S90-2-15-014			91215014	100/4	60	M12x1,5	T	20
	03.93 -		50	7	S90-7-25-007			91725007	100/4	60	M12x1,5	§21	
TWINGO II (CN0_)	03.07 -	S1-1-12-50-23-17	10	1	S90-1-05-003		S11	91105003	100/4	60	M12x1,5	T	4
	03.07 -	M12x1,5x23, KG60°	30	2	S90-2-15-014		S3	91215014	100/4	60	M12x1,5	T	4
	03.07 -		32	2	S90-2-16-002			91216002	100/4	60	M12x1,5	T	4
	03.07 -		40	2	S90-2-20-010			91220010	100/4	60	M12x1,5	T	4
	03.07 -		40	7	S90-7-20-026			91720026	100/4	60	M12x1,5	T	4
	03.07 -		50	7	S90-7-25-007			91725007	100/4	60	M12x1,5	T	4
TWINGO III (AH)	09.14 -	S1-1-12-50-24-17	10	1	S90-1-05-003			91105003	100/4	60	M12x1,5	T	6
	09.14 -	M12x1,5x24, KG60°	30	2	S90-2-15-014			91215014	100/4	60	M12x1,5	T	6
	09.14 -		32	2	S90-2-16-002			91216002	100/4	60	M12x1,5	T	6
	09.14 -		40	2	S90-2-20-010			91220010	100/4	60	M12x1,5	T	6
	09.14 -		40	7	S90-7-20-026			91720026	100/4	60	M12x1,5	T	6
	09.14 -		50	7	S90-7-25-007			91725007	100/4	60	M12x1,5	T	6
WIND (E4M_)	07.10 -	S1-1-12-50-23-17	30	2	S90-2-15-014			91215014	100/4	60	M12x1,5	T	29
	07.10 -	M12x1,5x23, KG60°	32	2	S90-2-16-002			91216002	100/4	60	M12x1,5	T	29
	07.10 -		40	2	S90-2-20-010			91220010	100/4	60	M12x1,5	T	29
	07.10 -		40	7	S90-7-20-026			91720026	100/4	60	M12x1,5	T	29
	07.10 -		50	7	S90-7-25-007			91725007	100/4	60	M12x1,5	T	29
SAAB													
9-3 (YS3D)	02.98 - 08.03	S1-1-12-50-24-17	10	1	S90-1-05-013			91105013	110/5	65	M12x1,5	T	27
	02.98 - 08.03	M12x1,5x24, KG60°	20	1	S90-1-10-002		S11	91110002	110/5	65	M12x1,5	T	27
	02.98 - 08.03		32	2	S90-2-16-001			91216001	110/5	65	M12x1,5	T	27
	02.98 - 08.03		40	2	S90-2-20-006			91220006	110/5	65	M12x1,5	§21	27
9-3 (YS3F)	09.02 -	S1-1-12-50-26-17	10	1	S90-1-05-013			91105013	110/5	65	M12x1,5	T	11
	09.02 -	M12x1,5x26, KG60°	32	2	S90-2-16-001			91216001	110/5	65	M12x1,5	T	11
	09.02 -		40	2	S90-2-20-006			91220006	110/5	65	M12x1,5	T	11
9-3 Cabriolet (YS3D)	02.98 - 08.03	S1-1-12-50-24-17	10	1	S90-1-05-013			91105013	110/5	65	M12x1,5	T	27
9-3 Convertible (YS3D)	02.98 - 08.03	M12x1,5x24, KG60°	20	1	S90-1-10-002		S11	91110002	110/5	65	M12x1,5	T	27
	02.98 - 08.03		32	2	S90-2-16-001			91216001	110/5	65	M12x1,5	T	27
	02.98 - 08.03		40	2	S90-2-20-006			91220006	110/5	65	M12x1,5	§21	27
9-3 Cabriolet (YS3F)	08.03 -	S1-1-12-50-26-17	10	1	S90-1-05-013			91105013	110/5	65	M12x1,5	T	11
9-3 Convertible (YS3F)	08.03 -	M12x1,5x26, KG60°	32	2	S90-2-16-001			91216001	110/5	65	M12x1,5	T	11
	08.03 -		40	2	S90-2-20-006			91220006	110/5	65	M12x1,5	T	11
9-3 Kombi	03.05 -	S1-1-12-50-26-17	10	1	S90-1-05-013			91105013	110/5	65	M12x1,5	T	11
9-3 Estate	03.05 -	M12x1,5x26, KG60°	32	2	S90-2-16-001			91216001	110/5	65	M12x1,5	T	11
	03.05 -		40	2	S90-2-20-006			91220006	110/5	65	M12x1,5	T	11

Modell | *Model*	Baujahr | *Year*	Original-radschraube (nicht bestellbar) | *Original Bolt (not available)*	Spurweiten-änd. Achse | *Total track widening* (mm)	Eibach System	Artikel-Nr. silber | *Part-No. silver*	Artikel-Nr. schwarz | *Part-No. black*	Hinweise | *Notes*	Kennzeichnung | *Stamping*	Lochkreis | - Anzahl | *Bolt pattern* | *No. of holes*	Zentrierung | *Centre bore* (mm)	Gewinde | *Thread*	Gutachten | *Homologation*	ET-Grenze | *Offset frontier*
SAAB													
9-5 (YS3E)													
	09.97 -	S1-1-12-50-26-17	10	1	S90-1-05-013			91105013	110/5	65	M12x1,5	T	19
	09.97 -	M12x1,5x26, KG60°	20	1	S90-1-10-002		S11	91110002	110/5	65	M12x1,5	T	19
	09.97 -		32	2	S90-2-16-001		S3	91216001	110/5	65	M12x1,5	T	19
	09.97 -		40	2	S90-2-20-006			91220006	110/5	65	M12x1,5	T	19
9-5 Kombi (YS3E)													
9-5 Estate (YS3E)	10.98 -	S1-1-12-50-26-17	10	1	S90-1-05-013			91105013	110/5	65	M12x1,5	T	19
	10.98 -	M12x1,5x26, KG60°	20	1	S90-1-10-002		S11	91110002	110/5	65	M12x1,5	T	19
	10.98 -		32	2	S90-2-16-001		S3	91216001	110/5	65	M12x1,5	T	19
	10.98 -		40	2	S90-2-20-006			91220006	110/5	65	M12x1,5	T	19
900 II													
	07.93 - 02.98	S1-1-12-50-24-17	10	1	S90-1-05-013			91105013	110/5	65	M12x1,5	T	27
	07.93 - 02.98	M12x1,5x24, KG60°	20	1	S90-1-10-002		S11	91110002	110/5	65	M12x1,5	T	27
	07.93 - 02.98		32	2	S90-2-16-001			91216001	110/5	65	M12x1,5	T	27
	07.93 - 02.98		40	2	S90-2-20-006			91220006	110/5	65	M12x1,5	§21	
900 II Cabriolet													
900 II Convertible	09.93 - 02.98	S1-1-12-50-24-17	10	1	S90-1-05-013			91105013	110/5	65	M12x1,5	T	27
	09.93 - 02.98	M12x1,5x24, KG60°	20	1	S90-1-10-002		S11	91110002	110/5	65	M12x1,5	T	27
	09.93 - 02.98		32	2	S90-2-16-001			91216001	110/5	65	M12x1,5	T	27
	09.93 - 02.98		40	2	S90-2-20-006			91220006	110/5	65	M12x1,5	§21	27
900 II Coupe													
	12.93 - 02.98	S1-1-12-50-24-17	10	1	S90-1-05-013			91105013	110/5	65	M12x1,5	T	27
	12.93 - 02.98	M12x1,5x24, KG60°	20	1	S90-1-10-002		S11	91110002	110/5	65	M12x1,5	T	27
	12.93 - 02.98		32	2	S90-2-16-001			91216001	110/5	65	M12x1,5	T	27
	12.93 - 02.98		40	2	S90-2-20-006			91220006	110/5	65	M12x1,5	§21	27
SEAT													
ALHAMBRA (7V8, 7V9)													
	04.96 - 03.10	S4-7-14-50-37-19	10	1	S90-1-05-016		S11	91105016	112/5	57	M14x1,5	T	30
	04.96 - 03.10	M14x1,5x37, KU r=14	30	2	S90-2-15-013			91215013	112/5	57	M14x1,5	T	30
	04.96 - 03.10		40	2	S90-2-20-003			91220003	112/5	57	M14x1,5	T	30
	04.96 - 03.10		50	7	S90-7-25-028			91725005	112/5	57	M14x1,5	T	30
ALTEA (5P1)													
	03.04 -	S1-6-14-50-27-17	10	1	S90-1-05-016		S6	91105016	112/5	57	M14x1,5	T	20
	03.04 -	M14x1,5x27, KU r=13	24	2	S90-2-12-003		S3	91212003	112/5	57	M14x1,5	T	20
	03.04 -		30	2	S90-2-15-013			91215013	112/5	57	M14x1,5	T	20
	03.04 -		40	2	S90-2-20-003			91220003	112/5	57	M14x1,5	T	20
	03.04 -		40	7	S90-7-20-017			91720017	112/5	57	M14x1,5	T	20
	03.04 -		50	7	S90-7-25-005			91725005	112/5	57	M14x1,5	T	20
	03.04 -		60	7	S90-7-30-012			91730012	112/5	57	M14x1,5	T	20
ALTEA XL (5P5, 5P8)													
	10.06 -	S1-6-14-50-27-17	10	1	S90-1-05-016		S6	91105016	112/5	57	M14x1,5	T	20
	10.06 -	M14x1,5x27, KU r=13	24	2	S90-2-12-003		S3	91212003	112/5	57	M14x1,5	T	20
	10.06 -		30	2	S90-2-15-013			91215013	112/5	57	M14x1,5	T	20
	10.06 -		40	2	S90-2-20-003			91220003	112/5	57	M14x1,5	T	20
	10.06 -		40	7	S90-7-20-017			91720017	112/5	57	M14x1,5	T	20
	10.06 -		50	7	S90-7-25-005			91725005	112/5	57	M14x1,5	T	20
	10.06 -		60	7	S90-7-30-012			91730012	112/5	57	M14x1,5	T	20
AROSA (6H)													
	05.97 - 06.04		10	1	S90-1-05-010		S11	91105010	100/4	57	M12x1,5	T	15
	05.97 - 06.04		16	1	S90-1-08-003		S11	91108003	100/4	57	M12x1,5	T	15
	05.97 - 06.04		30	2	S90-2-15-004		S13	91215004	100/4	57	M12x1,5	T	15
	05.97 - 06.04		40	2	S90-2-20-011			91220011	100/4	57	M12x1,5	T	15
	05.97 - 06.04		50	7	S90-7-25-001			91725001	100/4	57	M12x1,5	T	15
CORDOBA (6K1, 6K2)													
	02.93 - 10.99		10	1	S90-1-05-010		S11	91105010	100/4	57	M12x1,5	T	23
	02.93 - 10.99		16	1	S90-1-08-003		S11	91108003	100/4	57	M12x1,5	T	23
	02.93 - 10.99		30	2	S90-2-15-004		S13	91215004	100/4	57	M12x1,5	T	23
	02.93 - 10.99		40	2	S90-2-20-011			91220011	100/4	57	M12x1,5	T	23
	02.93 - 10.99		50	7	S90-7-25-001			91725001	100/4	57	M12x1,5	T	23
CORDOBA (6L2)													
	09.02 - 11.09	S1-6-14-50-27-17	10	1	S90-1-05-006			91105006	100/5	57	M14x1,5	T	13
	09.02 - 11.09	M14x1,5x27, KU r=13	16	1	S90-1-08-001		S6	91108001	100/5	57	M14x1,5	T	13
	09.02 - 11.09		30	2	S90-2-15-005			91215005	100/5	57	M14x1,5	T	13
	09.02 - 11.09		40	2	S90-2-20-004			91220004	100/5	57	M14x1,5	T	13
	09.02 - 11.09		50	7	S90-7-25-025			91725025	100/5	57	M14x1,5	T	13
	09.02 - 11.09		60	7	S90-7-30-016			91730016	100/5	57	M14x1,5	T	13
CORDOBA Vario (6K5)													
CORDOBA Station Wagon (6K5)	08.96 - 06.99		10	1	S90-1-05-010		S11	91105010	100/4	57	M12x1,5	T	23
	08.96 - 06.99		16	1	S90-1-08-003		S11	91108003	100/4	57	M12x1,5	T	23
	08.96 - 06.99		30	2	S90-2-15-004		S13	91215004	100/4	57	M12x1,5	T	23
	08.96 - 06.99		40	2	S90-2-20-011			91220011	100/4	57	M12x1,5	T	23
	08.96 - 06.99		50	7	S90-7-25-001			91725001	100/4	57	M12x1,5	T	23
EXEO (3R2)													
EXEO Station Wagon (3R2)	12.08 -	S1-6-14-50-27-17	24	2	S90-2-12-003		S3	91212003	112/5	57	M14x1,5	T	15
	12.08 -	M14x1,5x27, KU r=13	30	2	S90-2-15-013			91215013	112/5	57	M14x1,5	T	15
	12.08 -		40	2	S90-2-20-003			91220003	112/5	57	M14x1,5	T	15
	12.08 -		40	7	S90-7-20-017			91720017	112/5	57	M14x1,5	T	15
	12.08 -		50	7	S90-7-25-005			91725005	112/5	57	M14x1,5	T	15
	12.08 -		60	7	S90-7-30-012			91730012	112/5	57	M14x1,5	T	15
EXEO ST (3R5)													
	05.09 -	S1-6-14-50-27-17	24	2	S90-2-12-003		S3	91212003	112/5	57	M14x1,5	T	15
	05.09 -	M14x1,5x27, KU r=13	30	2	S90-2-15-013			91215013	112/5	57	M14x1,5	T	15
	05.09 -		40	2	S90-2-20-003			91220003	112/5	57	M14x1,5	T	15
	05.09 -		40	7	S90-7-20-017			91720017	112/5	57	M14x1,5	T	15
	05.09 -		50	7	S90-7-25-005			91725005	112/5	57	M14x1,5	T	15
	05.09 -		60	7	S90-7-30-012			91730012	112/5	57	M14x1,5	T	15
IBIZA II (6K1)													
	03.93 - 08.99	S1-6-12-50-24-17	10	1	S90-1-05-010		S11	91105010	100/4	57	M12x1,5	T	23
	03.93 - 08.99	M12x1,5x24, KU r=13	16	1	S90-1-08-003		S11	91108003	100/4	57	M12x1,5	T	23
	03.93 - 08.99		30	2	S90-2-15-004		S13	91215004	100/4	57	M12x1,5	T	23
	03.93 - 08.99		40	2	S90-2-20-011			91220011	100/4	57	M12x1,5	T	23
	03.93 - 08.99		50	7	S90-7-25-001			91725001	100/4	57	M12x1,5	T	23
IBIZA III (6K1)													
	08.99 - 02.02	S1-6-12-50-24-17	10	1	S90-1-05-010		S11	91105010	100/4	57	M12x1,5	T	23
	08.99 - 02.02	M12x1,5x24, KU r=13	16	1	S90-1-08-003		S11	91108003	100/4	57	M12x1,5	T	23
	08.99 - 02.02		30	2	S90-2-15-004		S13	91215004	100/4	57	M12x1,5	T	23
	08.99 - 02.02		40	2	S90-2-20-011			91220011	100/4	57	M12x1,5	T	23
	08.99 - 02.02		50	7	S90-7-25-001			91725001	100/4	57	M12x1,5	T	23

Modell | *Model*	Baujahr | *Year*	Original-radschraube (nicht bestellbar) | *Original Bolt (not available)*	Spurweiten-änd. Achse | *Total track widening* (mm)	Eibach System	Artikel-Nr. silber | *Part-No. silver*	Artikel-Nr. schwarz | *Part-No. black*	Hinweise | *Notes*	Kennzeichnung | *Stamping*	Lochkreis | - Anzahl | *Bolt pattern* | *No. of holes*	Zentrierung | *Centre bore* (mm)	Gewinde | *Thread*	Gutachten | *Homologation*	ET-Grenze | *Offset frontier*
SEAT													
IBIZA IV (6L1)													
	02.02 - 11.09	S1-6-14-50-27-17	10	1	S90-1-05-006			91105006	100/5	57	M14x1,5	T	13
	02.02 - 11.09	M14x1,5x27, KU r=13	16	1	S90-1-08-001		S6	91108001	100/5	57	M14x1,5	T	13
	02.02 - 11.09		30	2	S90-2-15-005			91215005	100/5	57	M14x1,5	T	13
	02.02 - 11.09		40	2	S90-2-20-004			91220004	100/5	57	M14x1,5	T	13
	02.02 - 11.09		50	7	S90-7-25-025			91725025	100/5	57	M14x1,5	T	13
	02.02 - 11.09		60	7	S90-7-30-016			91730016	100/5	57	M14x1,5	T	13
IBIZA V (6J5, 6P5)													
	03.08 -	S1-6-14-50-27-17	10	1	S90-1-05-006		S6	91105006	100/5	57	M14x1,5	T	8
	03.08 -	M14x1,5x27, KU r=13	24	2	S90-2-12-013		S3	91212013	100/5	57	M14x1,5	T	8
	03.08 -		30	2	S90-2-15-005			91215005	100/5	57	M14x1,5	T	8
	03.08 -		40	2	S90-2-20-004			91220004	100/5	57	M14x1,5	T	8
	03.08 -		40	7	S90-7-20-028			91720028	100/5	57	M14x1,5	T	8
	03.08 -		50	7	S90-7-25-003			91725003	100/5	57	M14x1,5	T	8
IBIZA V SPORTCOUPE (6J1, 6P1))													
	07.08 -	S1-6-14-50-27-17	10	1	S90-1-05-006		S6	91105006	100/5	57	M14x1,5	T	8
	07.08 -	M14x1,5x27, KU r=13	24	2	S90-2-12-013		S3	91212013	100/5	57	M14x1,5	T	8
	07.08 -		30	2	S90-2-15-005			91215005	100/5	57	M14x1,5	T	8
	07.08 -		40	2	S90-2-20-004			91220004	100/5	57	M14x1,5	T	8
	07.08 -		40	7	S90-7-20-028			91720028	100/5	57	M14x1,5	T	8
	07.08 -		50	7	S90-7-25-003			91725003	100/5	57	M14x1,5	T	8
IBIZA V ST (6J8, 6P8)													
	03.10 -	S1-6-14-50-27-17	10	1	S90-1-05-006		S6	91105006	100/5	57	M14x1,5	T	8
	03.10 -	M14x1,5x27, KU r=13	24	2	S90-2-12-013		S3	91212013	100/5	57	M14x1,5	T	8
	03.10 -		30	2	S90-2-15-005			91215005	100/5	57	M14x1,5	T	8
	03.10 -		40	2	S90-2-20-004			91220004	100/5	57	M14x1,5	T	8
	03.10 -		40	7	S90-7-20-028			91720028	100/5	57	M14x1,5	T	8
	03.10 -		50	7	S90-7-25-003			91725003	100/5	57	M14x1,5	T	8
LEON (1M1)													
	11.99 - 06.06	S1-6-14-50-27-17	10	1	S90-1-05-006		S11	91105006	100/5	57	M14x1,5	T	23
	11.99 - 06.06	M14x1,5x27, KU r=13	16	1	S90-1-08-001		S6	91108001	100/5	57	M14x1,5	T	23
	11.99 - 06.06		24	2	S90-2-12-003			91212003	100/5	57	M14x1,5	T	23
	11.99 - 06.06		30	2	S90-2-15-005			91215005	100/5	57	M14x1,5	T	23
	11.99 - 06.06		40	2	S90-2-20-004			91220004	100/5	57	M14x1,5	T	23
	11.99 - 06.06		50	7	S90-7-25-003			91725003	100/5	57	M14x1,5	T	23
LEON (1P1)													
	05.05 -	S1-6-14-50-27-17	10	1	S90-1-05-016		S6	91105016	112/5	57	M14x1,5	T	20
	05.05 -	M14x1,5x27, KU r=13	24	2	S90-2-12-003			91212003	112/5	57	M14x1,5	T	20
	05.05 -		30	2	S90-2-15-013			91215013	112/5	57	M14x1,5	T	20
	05.05 -		40	2	S90-2-20-003			91220003	112/5	57	M14x1,5	T	20
	05.05 -		40	7	S90-7-20-017			91720017	112/5	57	M14x1,5	T	20
	05.05 -		50	7	S90-7-25-005			91725005	112/5	57	M14x1,5	T	20
	05.05 -		60	7	S90-7-30-012			91730012	112/5	57	M14x1,5	T	20
LEON (5F1)													
	09.12 -	S1-6-14-50-27-17	20	2	S90-2-10-027		S74	91210027	112/5	57	M14x1,5	T	18
	09.12 -	M14x1,5x27, KU r=13	24	2	S90-2-12-003			91212003	112/5	57	M14x1,5	T	18
	09.12 -		30	2	S90-2-15-013			91215013	112/5	57	M14x1,5	T	18
	09.12 -		40	2	S90-2-20-003			91220003	112/5	57	M14x1,5	T	18
	09.12 -		40	7	S90-7-20-017			91720017	112/5	57	M14x1,5	T	18
	09.12 -		50	7	S90-7-25-005			91725005	112/5	57	M14x1,5	T	18
	09.12 -		60	7	S90-7-30-012			91730012	112/5	57	M14x1,5	T	18
LEON ST (5F8)													
	08.13 -	S1-6-14-50-27-17	20	2	S90-2-10-027		S74	91210027	112/5	57	M14x1,5	T	18
	08.13 -	M14x1,5x27, KU r=13	24	2	S90-2-12-003			91212003	112/5	57	M14x1,5	T	18
	08.13 -		30	2	S90-2-15-013			91215013	112/5	57	M14x1,5	T	18
	08.13 -		40	2	S90-2-20-003			91220003	112/5	57	M14x1,5	T	18
	08.13 -		40	7	S90-7-20-017			91720017	112/5	57	M14x1,5	T	18
	08.13 -		50	7	S90-7-25-005			91725005	112/5	57	M14x1,5	T	18
	08.13 -		60	7	S90-7-30-012			91730012	112/5	57	M14x1,5	T	18
LEON SC (5F5)													
	01.13 -	S1-6-14-50-27-17	20	2	S90-2-10-027		S74	91210027	112/5	57	M14x1,5	T	18
	01.13 -	M14x1,5x27, KU r=13	24	2	S90-2-12-003			91212003	112/5	57	M14x1,5	T	18
	01.13 -		30	2	S90-2-15-013			91215013	112/5	57	M14x1,5	T	18
	01.13 -		40	2	S90-2-20-003			91220003	112/5	57	M14x1,5	T	18
	01.13 -		40	7	S90-7-20-017			91720017	112/5	57	M14x1,5	T	18
	01.13 -		50	7	S90-7-25-005			91725005	112/5	57	M14x1,5	T	18
	01.13 -		60	7	S90-7-30-012			91730012	112/5	57	M14x1,5	T	18
Mii (KF1_)													
	10.11 -	S1-6-12-50-27-17	24	2	S90-2-12-019		S3	91212019	100/4	57	M12x1,5	T	10
	10.11 -	M12x1,5x27, KU r=13	30	2	S90-2-15-004		S13	91215004	100/4	57	M12x1,5	T	10
	10.11 -		40	2	S90-2-20-011			91220011	100/4	57	M12x1,5	T	10
	10.11 -		50	7	S90-7-25-001			91725001	100/4	57	M12x1,5	T	10
TOLEDO II (1M2)													
	10.98 - 05.06	S1-6-14-50-27-17	10	1	S90-1-05-006		S11	91105006	100/5	57	M14x1,5	T	23
	10.98 - 05.06	M14x1,5x27, KU r=13	16	1	S90-1-08-001		S6	91108001	100/5	57	M14x1,5	T	23
	10.98 - 05.06		24	2	S90-2-12-003			91212003	100/5	57	M14x1,5	T	23
	10.98 - 05.06		30	2	S90-2-15-005			91215005	100/5	57	M14x1,5	T	23
	10.98 - 05.06		40	2	S90-2-20-004			91220004	100/5	57	M14x1,5	T	23
	10.98 - 05.06		50	7	S90-7-25-003			91725003	100/5	57	M14x1,5	T	23
TOLEDO III (5P2)													
	04.04 - 05.09	S1-6-14-50-27-17	10	1	S90-1-05-016		S6	91105016	112/5	57	M14x1,5	T	20
	04.04 - 05.09	M14x1,5x27, KU r=13	24	2	S90-2-12-003		S3	91212003	112/5	57	M14x1,5	T	20
	04.04 - 05.09		30	2	S90-2-15-013			91215013	112/5	57	M14x1,5	T	20
	04.04 - 05.09		40	2	S90-2-20-003			91220003	112/5	57	M14x1,5	T	20
	04.04 - 05.09		40	7	S90-7-20-017			91720017	112/5	57	M14x1,5	T	20
	04.04 - 05.09		50	7	S90-7-25-005			91725005	112/5	57	M14x1,5	T	20
	04.04 - 05.09		60	7	S90-7-30-012			91730012	112/5	57	M14x1,5	T	20
TOLEDO IV (KG3)													
	07.12 -	S1-6-14-50-27-17	20	2	S90-2-10-027		S74	91210027	100/5	57	M14x1,5	T	8
	07.12 -	M14x1,5x27, KU r=13	24	2	S90-2-12-003			91212003	100/5	57	M14x1,5	T	8
	07.12 -		30	2	S90-2-15-013			91215013	100/5	57	M14x1,5	T	8
	07.12 -		40	2	S90-2-20-003			91220003	100/5	57	M14x1,5	T	8
	07.12 -		50	7	S90-7-25-025			91725025	100/5	57	M14x1,5	T	8
	07.12 -		60	7	S90-7-30-016			91730016	100/5	57	M14x1,5	T	8

Modell | *Model*	Baujahr | *Year*	Original-radschraube (nicht bestellbar) | *Original Bolt (not available)*	Spurweiten-änd. Achse | *Total track widening* (mm)	Eibach System	Artikel-Nr. silber | *Part-No. silver*	Artikel-Nr. schwarz | *Part-No. black*	Hinweise | *Notes*	Kennzeichnung | *Stamping*	Lochkreis | - Anzahl | *Bolt pattern* | *No. of holes*	Zentrierung | *Centre bore* (mm)	Gewinde | *Thread*	Gutachten | *Homologation*	ET-Grenze | *Offset frontier*
SKODA													
CITIGO													
	10.11 -	S1-6-12-50-27-17	24	2	S90-2-12-019		S3	91212019	100/4	57	M12x1,5	T	10
	10.11 -	M12x1,5x27, KU r=13	30	2	S90-2-15-004		S13	91215004	100/4	57	M12x1,5	T	10
	10.11 -		40	2	S90-2-20-011			91220011	100/4	57	M12x1,5	T	10
	10.11 -		50	7	S90-7-25-001			91725001	100/4	57	M12x1,5	T	10
FABIA (6Y2)													
	08.99 - 03.08	S1-6-14-50-27-17	10	1	S90-1-05-006		S11	91105006	100/5	57	M14x1,5	T	20
	08.99 - 03.08	M14x1,5x27, KU r=13	16	1	S90-1-08-001		S11	91108001	100/5	57	M14x1,5	T	20
	08.99 - 03.08		30	2	S90-2-15-005			91215005	100/5	57	M14x1,5	T	20
	08.99 - 03.08		40	2	S90-2-20-004			91220004	100/5	57	M14x1,5	T	20
	08.99 - 03.08		50	7	S90-7-25-003			91725003	100/5	57	M14x1,5	T	20
FABIA (5J)													
	12.06 - 12.14	S1-6-14-50-27-17	24	2	S90-2-12-013		S3	91212013	100/5	57	M14x1,5	T	3
	12.06 - 12.14	M14x1,5x27, KU r=13	30	2	S90-2-15-005			91215005	100/5	57	M14x1,5	T	3
	12.06 - 12.14		40	2	S90-2-20-004			91220004	100/5	57	M14x1,5	T	3
	12.06 - 12.14		50	7	S90-7-25-003			91725003	100/5	57	M14x1,5	T	3
FABIA (NJ3)													
	08.14 -	S1-6-14-50-27-17	20	2	S90-2-10-034		S3	91210034	100/5	57	M14x1,5	T	8
	08.14 -	M14x1,5x27, KU r=13	24	2	S90-2-12-013		S3	91212013	100/5	57	M14x1,5	T	8
	08.14 -		30	2	S90-2-15-005			91215005	100/5	57	M14x1,5	T	8
	08.14 -		40	2	S90-2-20-004			91220004	100/5	57	M14x1,5	T	8
	08.14 -		40	7	S90-7-20-028			91720028	100/5	57	M14x1,5	T	8
	08.14 -		50	7	S90-7-25-003			91725003	100/5	57	M14x1,5	T	8
FABIA Combi (6Y5)													
FABIA Station Wagon (6Y5)	04.00 - 12.07	S1-6-14-50-27-17	10	1	S90-1-05-006		S11	91105006	100/5	57	M14x1,5	T	20
	04.00 - 12.07	M14x1,5x27, KU r=13	16	1	S90-1-08-001		S11	91108001	100/5	57	M14x1,5	T	20
	04.00 - 12.07		30	2	S90-2-15-005			91215005	100/5	57	M14x1,5	T	20
	04.00 - 12.07		40	2	S90-2-20-004			91220004	100/5	57	M14x1,5	T	20
	04.00 - 12.07		50	7	S90-7-25-003			91725003	100/5	57	M14x1,5	T	20
FABIA Combi (NJ5)													
FABIA Station Wagon (NJ5)	10.14 -	S1-6-14-50-27-17	20	2	S90-2-10-034		S3	91210034	100/5	57	M14x1,5	T	8
	10.14 -	M14x1,5x27, KU r=13	24	2	S90-2-12-013		S3	91212013	100/5	57	M14x1,5	T	8
	10.14 -		30	2	S90-2-15-005			91215005	100/5	57	M14x1,5	T	8
	10.14 -		40	2	S90-2-20-004			91220004	100/5	57	M14x1,5	T	8
	10.14 -		40	7	S90-7-20-028			91720028	100/5	57	M14x1,5	T	8
	10.14 -		50	7	S90-7-25-003			91725003	100/5	57	M14x1,5	T	8
FABIA Combi (5J)													
FABIA Station Wagon (5J)	10.07 - 12.14	S1-6-14-50-27-17	24	2	S90-2-12-013		S3	91212013	100/5	57	M14x1,5	T	3
	10.07 - 12.14	M14x1,5x27, KU r=13	30	2	S90-2-15-005			91215005	100/5	57	M14x1,5	T	3
	10.07 - 12.14		40	2	S90-2-20-004			91220004	100/5	57	M14x1,5	T	3
	10.07 - 12.14		50	7	S90-7-25-003			91725003	100/5	57	M14x1,5	T	3
OCTAVIA (1U2)													
	09.96 - 12.10	S1-6-14-50-27-17	10	1	S90-1-05-006		S11	91105006	100/5	57	M14x1,5	T	18
	09.96 - 12.10	M14x1,5x27, KU r=13	16	1	S90-1-08-001		S11	91108001	100/5	57	M14x1,5	T	18
	09.96 - 12.10		30	2	S90-2-15-005			91215005	100/5	57	M14x1,5	T	18
	09.96 - 12.10		40	2	S90-2-20-004			91220004	100/5	57	M14x1,5	T	18
	09.96 - 12.10		50	7	S90-7-25-003			91725003	100/5	57	M14x1,5	T	18
OCTAVIA (1Z3)													
	02.04 - 06.13	S1-6-14-50-27-17	10	1	S90-1-05-016		S11	91105016	112/5	57	M14x1,5	T	22
	02.04 - 06.13	M14x1,5x27, KU r=13	16	1	S90-1-08-002		S11	91108002	112/5	57	M14x1,5	T	22
	02.04 - 06.13		20	2	S90-2-10-027		S74	91210027	112/5	57	M14x1,5	T	22
	02.04 - 06.13		24	2	S90-2-12-003			91212003	112/5	57	M14x1,5	T	22
	02.04 - 06.13		30	2	S90-2-15-013			91215013	112/5	57	M14x1,5	T	22
	02.04 - 06.13		40	2	S90-2-20-003			91220003	112/5	57	M14x1,5	T	22
	02.04 - 06.13		50	7	S90-7-25-005			91725005	112/5	57	M14x1,5	T	22
OCTAVIA (5E3)													
	11.12 -	S1-6-14-50-27-17	20	2	S90-2-10-027		S74	91210027	112/5	57	M14x1,5	T	18
	11.12 -	M14x1,5x27, KU r=13	24	2	S90-2-12-003			91212003	112/5	57	M14x1,5	T	18
	11.12 -		30	2	S90-2-15-013			91215013	112/5	57	M14x1,5	T	18
	11.12 -		40	2	S90-2-20-003			91220003	112/5	57	M14x1,5	T	18
	11.12 -		40	7	S90-7-20-017			91720017	112/5	57	M14x1,5	T	18
	11.12 -		50	7	S90-7-25-005			91725005	112/5	57	M14x1,5	T	18
	11.12 -		60	7	S90-7-30-012			91730012	112/5	57	M14x1,5	T	18
OCTAVIA Combi (1U5)													
OCTAVIA Station Wagon (1U5)	07.98 - 12.10	S1-6-14-50-27-17	10	1	S90-1-05-006		S11	91105006	100/5	57	M14x1,5	T	18
	07.98 - 12.10	M14x1,5x27, KU r=13	16	1	S90-1-08-001		S11	91108001	100/5	57	M14x1,5	T	18
	07.98 - 12.10		30	2	S90-2-15-005			91215005	100/5	57	M14x1,5	T	18
	07.98 - 12.10		40	2	S90-2-20-004			91220004	100/5	57	M14x1,5	T	18
	07.98 - 12.10		50	7	S90-7-25-003			91725003	100/5	57	M14x1,5	T	18
OCTAVIA Combi (1Z5)													
OCTAVIA Station Wagon (1Z5)	02.04 - 06.13	S1-6-14-50-27-17	10	1	S90-1-05-016		S11	91105016	112/5	57	M14x1,5	T	22
	02.04 - 06.13	M14x1,5x27, KU r=13	16	1	S90-1-08-002		S11	91108002	112/5	57	M14x1,5	T	22
	02.04 - 06.13		20	2	S90-2-10-027		S74	91210027	112/5	57	M14x1,5	T	22
	02.04 - 06.13		24	2	S90-2-12-003			91212003	112/5	57	M14x1,5	T	22
	02.04 - 06.13		30	2	S90-2-15-013			91215013	112/5	57	M14x1,5	T	22
	02.04 - 06.13		40	2	S90-2-20-003			91220003	112/5	57	M14x1,5	T	22
	02.04 - 06.13		50	7	S90-7-25-005			91725005	112/5	57	M14x1,5	T	22
OCTAVIA Combi (5E5)													
OCTAVIA Station Wagon (5E5)	11.12 -	S1-6-14-50-27-17	20	2	S90-2-10-027		S74	91210027	112/5	57	M14x1,5	T	18
	11.12 -	M14x1,5x27, KU r=13	24	2	S90-2-12-003			91212003	112/5	57	M14x1,5	T	18
	11.12 -		30	2	S90-2-15-013			91215013	112/5	57	M14x1,5	T	18
	11.12 -		40	2	S90-2-20-003			91220003	112/5	57	M14x1,5	T	18
	11.12 -		40	7	S90-7-20-017			91720017	112/5	57	M14x1,5	T	18
	11.12 -		50	7	S90-7-25-005			91725005	112/5	57	M14x1,5	T	18
	11.12 -		60	7	S90-7-30-012			91730012	112/5	57	M14x1,5	T	18
RAPID													
	07.12 -	S1-6-14-50-27-17	20	2	S90-2-10-027		S74	91210027	100/5	57	M14x1,5	T	8
	07.12 -	M14x1,5x27, KU r=13	24	2	S90-2-12-003			91212003	100/5	57	M14x1,5	T	8
	07.12 -		30	2	S90-2-15-013			91215013	100/5	57	M14x1,5	T	8
	07.12 -		40	2	S90-2-20-003			91220003	100/5	57	M14x1,5	T	8
	07.12 -		50	7	S90-7-25-025			91725025	100/5	57	M14x1,5	T	8
	07.12 -		60	7	S90-7-30-016			91730016	100/5	57	M14x1,5	T	8
ROOMSTER (5J)													
	03.06 -	S1-6-14-50-27-17	24	2	S90-2-12-013		S3	91212013	100/5	57	M14x1,5	T	3
	03.06 -	M14x1,5x27, KU r=13	30	2	S90-2-15-005			91215005	100/5	57	M14x1,5	T	3
	03.06 -		40	2	S90-2-20-004			91220004	100/5	57	M14x1,5	T	3
	03.06 -		50	7	S90-7-25-003			91725003	100/5	57	M14x1,5	T	3

Modell | *Model*	Baujahr | *Year*	Original-radschraube (nicht bestellbar) | *Original Bolt (not available)*	Spurweiten-änd. Achse | *Total track widening* (mm)	Eibach System	Artikel-Nr. silber | *Part-No. silver*	Artikel-Nr. schwarz | *Part-No. black*	Hinweise | *Notes*	Kennzeichnung | *Stamping*	Lochkreis | - Anzahl | *Bolt pattern* | *No. of holes*	Zentrierung | *Centre bore* (mm)	Gewinde | *Thread*	Gutachten | *Homologation*	ET-Grenze | *Offset frontier*
SKODA													
SUPERB (3U4)													
	12.01 - 03.08	S1-6-14-50-27-17	10	1	S90-1-05-006		S11	91105006	112/5	57	M14x1,5	T	22
	12.01 - 03.08	M14x1,5x27, KU r=13	16	1	S90-1-08-001		S11	91108001	112/5	57	M14x1,5	T	22
	12.01 - 03.08		30	2	S90-2-15-005			91215005	112/5	57	M14x1,5	T	22
	12.01 - 03.08		40	2	S90-2-20-004			91220004	112/5	57	M14x1,5	T	22
	12.01 - 03.08		50	7	S90-7-25-005			91725005	112/5	57	M14x1,5	T	22
SUPERB (3T4)													
	03.08 -	S1-6-14-50-27-17	24	2	S90-2-12-003		S3	91212003	112/5	57	M14x1,5	T	20
	03.08 -	M14x1,5x27, KU r=13	30	2	S90-2-15-013			91215013	112/5	57	M14x1,5	T	20
	03.08 -		40	2	S90-2-20-003			91220003	112/5	57	M14x1,5	T	20
	03.08 -		40	7	S90-7-20-017			91720017	112/5	57	M14x1,5	T	20
	03.08 -		50	7	S90-7-25-005			91725005	112/5	57	M14x1,5	T	20
	03.08 -		60	7	S90-7-30-012			91730012	112/5	57	M14x1,5	T	20
SUPERB (3V3)													
	03.15 -	S1-6-14-50-27-17	20	2	S90-2-10-027		S3	91210027	112/5	57	M14x1,5	T	16
	03.15 -	M14x1,5x27, KU r=13	24	2	S90-2-12-003		S3	91212003	112/5	57	M14x1,5	T	16
	03.15 -		30	2	S90-2-15-013			91215013	112/5	57	M14x1,5	T	16
	03.15 -		40	2	S90-2-20-003			91220003	112/5	57	M14x1,5	T	16
	03.15 -		40	7	S90-7-20-017			91720017	112/5	57	M14x1,5	T	16
	03.15 -		50	7	S90-7-25-005			91725005	112/5	57	M14x1,5	T	16
	03.15 -		60	7	S90-7-30-012			91730012	112/5	57	M14x1,5	T	16
SUPERB Kombi (3T5)													
SUPERB Estate (3T5)	10.09 -	S1-6-14-50-27-17	24	2	S90-2-12-003		S3	91212003	112/5	57	M14x1,5	T	20
	10.09 -	M14x1,5x27, KU r=13	30	2	S90-2-15-013			91215013	112/5	57	M14x1,5	T	20
	10.09 -		40	2	S90-2-20-003			91220003	112/5	57	M14x1,5	T	20
	10.09 -		40	7	S90-7-20-017			91720017	112/5	57	M14x1,5	T	20
	10.09 -		50	7	S90-7-25-005			91725005	112/5	57	M14x1,5	T	20
	10.09 -		60	7	S90-7-30-012			91730012	112/5	57	M14x1,5	T	20
SUPERB Kombi (3V5)													
SUPERB Estate (3V5)	03.15 -	S1-6-14-50-27-17	20	2	S90-2-10-027		S3	91210027	112/5	57	M14x1,5	T	16
	03.15 -	M14x1,5x27, KU r=13	24	2	S90-2-12-003		S3	91212003	112/5	57	M14x1,5	T	16
	03.15 -		30	2	S90-2-15-013			91215013	112/5	57	M14x1,5	T	16
	03.15 -		40	2	S90-2-20-003			91220003	112/5	57	M14x1,5	T	16
	03.15 -		40	7	S90-7-20-017			91720017	112/5	57	M14x1,5	T	16
	03.15 -		50	7	S90-7-25-005			91725005	112/5	57	M14x1,5	T	16
	03.15 -		60	7	S90-7-30-012			91730012	112/5	57	M14x1,5	T	16
YETI (5L)													
	05.09 -	S1-6-14-50-27-17	20	2	S90-2-10-027			91210027	112/5	57	M14x1,5	T	15
	05.09 -	M14x1,5x27, KU r=13	24	2	S90-2-12-003			91212003	112/5	57	M14x1,5	T	15
	05.09 -		30	2	S90-2-15-013			91215013	112/5	57	M14x1,5	T	15
	05.09 -		40	2	S90-2-20-003			91220003	112/5	57	M14x1,5	T	15
	05.09 -		40	7	S90-7-20-017			91720017	112/5	57	M14x1,5	T	15
	05.09 -		50	7	S90-7-25-005			91725005	112/5	57	M14x1,5	T	15
	05.09 -		60	7	S90-7-30-012			91730012	112/5	57	M14x1,5	T	15
SMART													
CABRIO (450)													
CONVERTIBLE (450)	03.00 - 01.04	S1-5-12-50-26-17	10	1	S90-1-05-026			91105026	112/3	57	M12x1,5	T	-33
	03.00 - 01.04	M12x1,5x26, KU r=12	30	2	S90-2-15-028			91215028	112/3	57	M12x1,5	T	-33
	03.00 - 01.04		40	2	S90-2-20-017			91220017	112/3	57	M12x1,5	T	-33
	03.00 - 01.04		50	7	S90-7-25-035			91725035	112/3	57	M12x1,5	T	-33
	03.00 - 01.04		60	7	S90-7-30-028			91730028	112/3	57	M12x1,5	T	-33
CITY-COUPE (450)													
	07.98 - 01.04	S1-5-12-50-26-17	10	1	S90-1-05-026			91105026	112/3	57	M12x1,5	T	-33
	07.98 - 01.04	M12x1,5x26, KU r=12	30	2	S90-2-15-028			91215028	112/3	57	M12x1,5	T	-33
	07.98 - 01.04		40	2	S90-2-20-017			91220017	112/3	57	M12x1,5	T	-33
	07.98 - 01.04		50	7	S90-7-25-035			91725035	112/3	57	M12x1,5	T	-33
	07.98 - 01.04		60	7	S90-7-30-028			91730028	112/3	57	M12x1,5	T	-33
CROSSBLADE (450)													
	06.02 - 12.03	S1-5-12-50-26-17	10	1	S90-1-05-026			91105026	112/3	57	M12x1,5	T	-33
	06.02 - 12.03	M12x1,5x26, KU r=12	30	2	S90-2-15-028			91215028	112/3	57	M12x1,5	T	-33
	06.02 - 12.03		40	2	S90-2-20-017			91220017	112/3	57	M12x1,5	T	-33
	06.02 - 12.03		50	7	S90-7-25-035			91725035	112/3	57	M12x1,5	T	-33
	06.02 - 12.03		60	7	S90-7-30-028			91730028	112/3	57	M12x1,5	T	-33
FORTWO Cabrio (450)													
FORTWO Convertible (450)	01.04 - 01.07	S1-5-12-50-26-17	10	1	S90-1-05-026			91105026	112/3	57	M12x1,5	T	-33
	01.04 - 01.07	M12x1,5x26, KU r=12	30	2	S90-2-15-028			91215028	112/3	57	M12x1,5	T	-33
	01.04 - 01.07		40	2	S90-2-20-017			91220017	112/3	57	M12x1,5	T	-33
	01.04 - 01.07		50	7	S90-7-25-035			91725035	112/3	57	M12x1,5	T	-33
	01.04 - 01.07		60	7	S90-7-30-028			91730028	112/3	57	M12x1,5	T	-33
FORFOUR Schrägheck (453)													
FORFOUR Hatchback (453)	07.14 -	S1-1-12-50-24-17	10	1	S90-1-05-003			91105003	100/4	60	M12x1,5	T	2
	07.14 -	M12x1,5x24, KG60°	30	2	S90-2-15-014			91215014	100/4	60	M12x1,5	T	2
	07.14 -		32	2	S90-2-16-002			91216002	100/4	60	M12x1,5	T	2
	07.14 -		40	2	S90-2-20-010			91220010	100/4	60	M12x1,5	T	2
	07.14 -		40	7	S90-7-20-026			91720026	100/4	60	M12x1,5	T	2
	07.14 -		50	7	S90-7-25-007			91725007	100/4	60	M12x1,5	T	2
FORTWO Cabrio (451)													
FORTWO Convertible (451)	01.07 -	S1-5-12-50-24-17	30	2	S90-2-15-028			91215028	112/3	57	M12x1,5	T	7
	01.07 -	M12x1,5x24, KU r=12	40	2	S90-2-20-017			91220017	112/3	57	M12x1,5	T	7
	01.07 -		50	7	S90-7-25-035			91725035	112/3	57	M12x1,5	T	7
	01.07 -		60	7	S90-7-30-028			91730028	112/3	57	M12x1,5	§21	7
FORTWO Coupe (450)													
	01.04 - 02.07	S1-5-12-50-26-17	10	1	S90-1-05-026			91105026	112/3	57	M12x1,5	T	-33
	01.04 - 02.07	M12x1,5x26, KU r=12	30	2	S90-2-15-028			91215028	112/3	57	M12x1,5	T	-33
	01.04 - 02.07		40	2	S90-2-20-017			91220017	112/3	57	M12x1,5	T	-33
	01.04 - 02.07		50	7	S90-7-25-035			91725035	112/3	57	M12x1,5	T	-33
	01.04 - 02.07		60	7	S90-7-30-028			91730028	112/3	57	M12x1,5	T	-33
FORTWO Coupe (451)													
	01.07 -	S1-5-12-50-24-17	30	2	S90-2-15-028			91215028	112/3	57	M12x1,5	T	7
	01.07 -	M12x1,5x24, KU r=12	40	2	S90-2-20-017			91220017	112/3	57	M12x1,5	T	7
	01.07 -		50	7	S90-7-25-035			91725035	112/3	57	M12x1,5	T	7
	01.07 -		60	7	S90-7-30-028			91730028	112/3	57	M12x1,5	§21	7
FORTWO Coupe (453)													
	07.14 -	S1-1-12-50-24-17	10	1	S90-1-05-003			91105003	100/4	60	M12x1,5	T	2
	07.14 -	M12x1,5x24, KG60°	24	2	S90-2-12-026			91212026	100/4	60	M12x1,5	T	2
	07.14 -		30	2	S90-2-15-014			91215014	100/4	60	M12x1,5	T	2
	07.14 -		32	2	S90-2-16-002			91216002	100/4	60	M12x1,5	T	2
	07.14 -		40	2	S90-2-20-010			91220010	100/4	60	M12x1,5	T	2
	07.14 -		40	7	S90-7-20-026			91720026	100/4	60	M12x1,5	T	2
	07.14 -		50	7	S90-7-25-007			91725007	100/4	60	M12x1,5	T	2

Modell | *Model*	Baujahr | *Year*	Original-radschraube (nicht bestellbar) | *Original Bolt (not available)*	Spurweiten-änd. Achse | *Total track widening* (mm)	Eibach System	Artikel-Nr. silber | *Part-No. silver*	Artikel-Nr. schwarz | *Part-No. black*	Hinweise | *Notes*	Kennzeichnung | *Stamping*	Lochkreis | - Anzahl | *Bolt pattern* | *No. of holes*	Zentrierung | *Centre bore* (mm)	Gewinde | *Thread*	Gutachten | *Homologation*	ET-Grenze | *Offset frontier*
SMART													
ROADSTER (452)													
	04.03 - 11.05	S1-5-12-50-26-17	10	1	S90-1-05-026			91105026	112/3	57	M12x1,5	T	-50
	04.03 - 11.05	M12x1,5x26, KU r=12	30	2	S90-2-15-028			91215028	112/3	57	M12x1,5	T	-50
	04.03 - 11.05		40	2	S90-2-20-017			91220017	112/3	57	M12x1,5	T	-50
	04.03 - 11.05		50	7	S90-7-25-035			91725035	112/3	57	M12x1,5	T	-50
	04.03 - 11.05		60	7	S90-7-30-028			91730028	112/3	57	M12x1,5	T	-50
ROADSTER Coupe (452)													
	04.03 - 11.05	S1-5-12-50-26-17	10	1	S90-1-05-026			91105026	112/3	57	M12x1,5	T	-50
	04.03 - 11.05	M12x1,5x26, KU r=12	30	2	S90-2-15-028			91215028	112/3	57	M12x1,5	T	-50
	04.03 - 11.05		40	2	S90-2-20-017			91220017	112/3	57	M12x1,5	T	-50
	04.03 - 11.05		50	7	S90-7-25-035			91725035	112/3	57	M12x1,5	T	-50
	04.03 - 11.05		60	7	S90-7-30-028			91730028	112/3	57	M12x1,5	T	-50
SSANGYONG													
KORANDO (KJ)													
	12.96 -		50	8	S90-8-25-002		S9, S11	91825002	139,7/6	106,5	M12x1,5	T	-8
	12.96 -		60	8	S90-8-30-002		S9, S11	91830002	139,7/6	106,5	M12x1,5	T	-8
KORANDO Cabrio (KJ)													
	12.96 -		50	8	S90-8-25-002		S9, S11	91825002	139,7/6	106,5	M12x1,5	T	-8
	12.96 -		60	8	S90-8-30-002		S9, S11	91830002	139,7/6	106,5	M12x1,5	T	-8
MUSSO (FJ)													
	03.93 -		50	8	S90-8-25-002		S9, S11	91825002	139,7/6	106,5	M12x1,5	T	-8
	03.93 -		60	8	S90-8-30-002		S9, S11	91830002	139,7/6	106,5	M12x1,5	T	-8
MUSSO SPORTS													
	08.04 -		50	8	S90-8-25-002		S9, S11	91825002	139,7/6	106,5	M12x1,5	T	-8
	08.04 -		60	8	S90-8-30-002		S9, S11	91830002	139,7/6	106,5	M12x1,5	T	-8
REXTON (GAB_)													
	04.02 -		50	8	S90-8-25-002		S9, S11	91825002	139,7/6	106,5	M12x1,5	§21	
	04.02 -		60	8	S90-8-30-002		S9, S11	91830002	139,7/6	106,5	M12x1,5	§21	
SUBARU													
BRZ													
	06.12 -		20	6	S90-6-10-003		S16, S33	91610003	100/5	56	M12x1,25	§21	13
	06.12 -		30	4	S90-4-15-016		S9	91415016	100/5	56	M12x1,25	§21	13
	06.12 -		40	4	S90-4-20-002		S9	91420002	100/5	56	M12x1,25	§21	13
	06.12 -		50	4	S90-4-25-017		S9	91425017	100/5	56	M12x1,25	§21	13
	06.12 -		60	4	S90-4-30-030		S9	91430030	100/5	56	M12x1,25	§21	13
IMPREZA Coupe (GFC)													
	01.93 - 12.00		10	5	S90-5-05-028		S11, S16, S32	91505028	100/5	56	M12x1,25	T	30
	01.93 - 12.00		20	6	S90-6-10-003		S16, S33	91610003	100/5	56	M12x1,25	T	30
	01.93 - 12.00		40	4	S90-4-20-002		S9	91420002	100/5	56	M12x1,25	T	30
	01.93 - 12.00		50	4	S90-4-25-017		S9	91425017	100/5	56	M12x1,25	T	30
IMPREZA Schrägheck ***IMPREZA Hatchback***	12.02 - 12.04		10	5	S90-5-05-028		S11, S16, S32	91505028	100/5	56	M12x1,25	T	30
	12.02 - 12.04		20	6	S90-6-10-003		S16, S33	91610003	100/5	56	M12x1,25	T	30
	12.02 - 12.04		40	4	S90-4-20-002		S9	91420002	100/5	56	M12x1,25	T	30
	12.02 - 12.04		50	4	S90-4-25-017		S9	91425017	100/5	56	M12x1,25	T	30
IMPREZA Schrägheck ***IMPREZA Hatchback***	01.05 - 12.07		24	6	S90-6-12-002		S16, S33	91612002	114,3/5	56	M12x1,25	§21	
	01.05 - 12.07		30	6	S90-6-15-042		S16, S33	91615042	114,3/5	56	M12x1,25	§21	
	01.05 - 12.07		40	6	S90-6-20-027		S16, S33	91620027	114,3/5	56	M12x1,25	§21	
IMPREZA Schrägheck (GR, GH, G3) ***IMPREZA Hatchback (GR, GH, G3)***	03.07 -		40	4	S90-4-20-002		S9	91420002	100/5	56	M12x1,25	§21	
	03.07 -		50	4	S90-4-25-017		S9	91425017	100/5	56	M12x1,25	§21	
	03.07 -		60	4	S90-4-30-030		S9	91430030	100/5	56	M12x1,25	§21	
IMPREZA Station Wagon (GF) ***IMPREZA Estate (GF)***	08.92 - 12.00		10	5	S90-5-05-028		S11, S16, S32	91505028	100/5	56	M12x1,25	T	30
	08.92 - 12.00		20	6	S90-6-10-003		S16, S33	91610003	100/5	56	M12x1,25	T	30
	08.92 - 12.00		40	4	S90-4-20-002		S9	91420002	100/5	56	M12x1,25	T	30
	08.92 - 12.00		50	4	S90-4-25-017		S9	91425017	100/5	56	M12x1,25	T	30
IMPREZA Station Wagon (GG) ***IMPREZA Estate (GG)***	10.00 -		10	5	S90-5-05-028		S11, S16, S32	91505028	100/5	56	M12x1,25	T	30
	10.00 -		20	6	S90-6-10-003		S16, S33	91610003	100/5	56	M12x1,25	T	30
	10.00 -		40	4	S90-4-20-002		S9	91420002	100/5	56	M12x1,25	T	30
	10.00 -		50	4	S90-4-25-017		S9	91425017	100/5	56	M12x1,25	T	30
IMPREZA Station Wagon (GG) ***IMPREZA Estate (GG)***	01.05 - 12.07		24	6	S90-6-12-002		S16, S33	91612002	114,3/5	56	M12x1,25	§21	
	01.05 - 12.07		30	6	S90-6-15-042		S16, S33	91615042	114,3/5	56	M12x1,25	§21	
	01.05 - 12.07		40	6	S90-6-20-027		S16, S33	91620027	114,3/5	56	M12x1,25	§21	
IMPREZA Stufenheck (GC) ***IMPREZA Saloon (GC)***	08.92 - 12.00		10	5	S90-5-05-028		S11, S16, S32	91505028	100/5	56	M12x1,25	T	30
	08.92 - 12.00		20	6	S90-6-10-003		S16, S33	91610003	100/5	56	M12x1,25	T	30
	08.92 - 12.00		40	4	S90-4-20-002		S9	91420002	100/5	56	M12x1,25	T	30
	08.92 - 12.00		50	4	S90-4-25-017		S9	91425017	100/5	56	M12x1,25	T	30
IMPREZA Stufenheck (GD) ***IMPREZA Saloon (GD)***	10.00 - 12.04		10	5	S90-5-05-028		S11, S16, S32	91505028	100/5	56	M12x1,25	T	30
	10.00 - 12.04		20	6	S90-6-10-003		S16, S33	91610003	100/5	56	M12x1,25	T	30
	10.00 - 12.04		40	4	S90-4-20-002		S9	91420002	100/5	56	M12x1,25	T	30
	10.00 - 12.04		50	4	S90-4-25-017		S9	91425017	100/5	56	M12x1,25	T	30
IMPREZA Stufenheck (GD) ***IMPREZA Saloon (GD)***	01.05 - 12.07		24	6	S90-6-12-002		S16, S33	91612002	114,3/5	56	M12x1,25	§21	
	01.05 - 12.07		30	6	S90-6-15-042		S16, S33	91615042	114,3/5	56	M12x1,25	§21	
	01.05 - 12.07		40	6	S90-6-20-027		S16, S33	91620027	114,3/5	56	M12x1,25	§21	
IMPREZA Stufenheck (GR) ***IMPREZA Saloon (GR)***	03.07 -		40	4	S90-4-20-002		S9	91420002	100/5	56	M12x1,25	§21	
	03.07 -		50	4	S90-4-25-017		S9	91425017	100/5	56	M12x1,25	§21	
	03.07 -		60	4	S90-4-30-030		S9	91430030	100/5	56	M12x1,25	§21	
XV													
	12.11 -		20	6	S90-6-10-003		S16, S33	91610003	100/5	56	M12x1,25	§21	
	12.11 -		40	4	S90-4-20-002		S9	91420002	100/5	56	M12x1,25	§21	
	12.11 -		50	4	S90-4-25-017		S9	91425017	100/5	56	M12x1,25	§21	
	12.11 -		60	4	S90-4-30-030		S9	91430030	100/5	56	M12x1,25	§21	

Modell | *Model*	Baujahr | *Year*	Original-radschraube (nicht bestellbar) | *Original Bolt (not available)*	Spurweiten-änd. Achse | *Total track widening* (mm)	Eibach System	Artikel-Nr. silber | *Part-No. silver*	Artikel-Nr. schwarz | *Part-No. black*	Hinweise | *Notes*	Kennzeichnung | *Stamping*	Lochkreis | - Anzahl | *Bolt pattern* | *No. of holes*	Zentrierung | *Centre bore* (mm)	Gewinde | *Thread*	Gutachten | *Homologation*	ET-Grenze | *Offset frontier*
SUZUKI													
GRAND VITARA I (FT)													
	03.98 - 09.05		50	8	S90-8-25-006		S11	91825006	139,7/5	108	M12x1,25	T	-25
	03.98 - 09.05		60	8	S90-8-30-008		S11	91830008	139,7/5	108	M12x1,25	T	-25
GRAND VITARA I Cabriolet (FT) ***GRAND VITARA I Convertible (FT)***	03.98 - 09.05		50	8	S90-8-25-006		S11	91825006	139,7/5	108	M12x1,25	T	-25
	03.98 - 09.05		60	8	S90-8-30-008		S11	91830008	139,7/5	108	M12x1,25	T	-25
GRAND VITARA II (JT)													
	04.05 -		20	6	S90-6-10-021		S33	91610021	114,3/5	60	M12x1,25	T	15
	04.05 -		40	4	S90-4-20-021		S9, S23	91420021	114,3/5	60	M12x1,25	T	15
	04.05 -		50	4	S90-4-25-037			91425037	114,3/5	60	M12x1,25	T	15
JIMNY (FJ)													
	09.98 -		50	8	S90-8-25-006		S11	91825006	139,7/5	108	M12x1,25	§21	
	09.98 -		60	8	S90-8-30-008		S11	91830008	139,7/5	108	M12x1,25	§21	
KIZASHI (FR)													
	10.10 -		20	6	S90-6-10-021		S33	91610021	114,3/5	60	M12x1,25	T	20
	10.10 -		40	4	S90-4-20-021		S9, S23	91420021	114,3/5	60	M12x1,25	T	20
	10.10 -		50	4	S90-4-25-037			91425037	114,3/5	60	M12x1,25	T	20
SPLASH													
	01.08 -	S1-1-12-50-22-17	20	2	S90-2-10-017			91210017	100/4	54	M12x1,5	§21	
	01.08 -	M12x1,5x22, KG60°	30	2	S90-2-15-035			91615010	100/4	54	M12x1,5	§21	
	01.08 -		40	2	S90-2-20-023			91620026	100/4	54	M12x1,5	§21	
	01.08 -		50	7	S90-7-25-026			91725026	100/4	54	M12x1,5	§21	
SWIFT III (MZ, EZ)													
	02.05 -	S1-1-12-50-22-17	20	2	S90-2-10-017		S3	91210017	100/4	54	M12x1,5	T	15
	02.05 -	M12x1,5x22, KG60°	30	2	S90-2-15-035			91615010	100/4	54	M12x1,5	T	15
	02.05 -		40	2	S90-2-20-023			91620026	100/4	54	M12x1,5	T	15
	02.05 -		50	7	S90-7-25-026			91725026	100/4	54	M12x1,5	T	15
SWIFT III (MZ, EZ)													
	02.05 -	S1-1-12-50-22-17	24	2	S90-2-12-009			91212009	114,3/5	60	M12x1,5	T	20
	02.05 -	M12x1,5x22, KG60°	30	2	S90-2-15-022			91215022	114,3/5	60	M12x1,5	T	20
	02.05 -		32	2	S90-2-16-003			91216003	114,3/5	60	M12x1,5	T	20
	02.05 -		40	2	S90-2-20-024			91220024	114,3/5	60	M12x1,5	T	20
	02.05 -		42	7	S90-7-21-009			91721009	114,3/5	60	M12x1,5	T	20
	02.05 -		50	7	S90-7-25-037			91725037	114,3/5	60	M12x1,5	T	20
	02.05 -		60	7	S90-7-30-030			91730030	114,3/5	60	M12x1,5	T	20
SWIFT IV (FZ, NZ)													
	10.10 -	S1-1-12-50-22-17	20	2	S90-2-10-017			91210017	100/4	54	M12x1,5	T	20
	10.10 -	M12x1,5x22, KG60°	30	2	S90-2-15-035			91615010	100/4	54	M12x1,5	T	20
	10.10 -		40	2	S90-2-20-023			91620026	100/4	54	M12x1,5	T	20
	10.10 -		50	7	S90-7-25-026			91725026	100/4	54	M12x1,5	§21	20
SWIFT IV (FZ, NZ)													
	10.10 -	S1-1-12-50-22-17	24	2	S90-2-12-009			91212009	114,3/5	60	M12x1,5	T	20
	10.10 -	M12x1,5x22, KG60°	30	2	S90-2-15-022			91215022	114,3/5	60	M12x1,5	T	20
	10.10 -		32	2	S90-2-16-003			91216003	114,3/5	60	M12x1,5	T	20
	10.10 -		40	2	S90-2-20-024			91220024	114,3/5	60	M12x1,5	T	20
	10.10 -		42	7	S90-7-21-009			91721009	114,3/5	60	M12x1,5	T	20
	10.10 -		50	7	S90-7-25-037			91725037	114,3/5	60	M12x1,5	T	20
	10.10 -		60	7	S90-7-30-030			91730030	114,3/5	60	M12x1,5	T	20
SX4 (GY)													
	06.06 -	S1-1-12-50-22-17	24	2	S90-2-12-009			91212009	114,3/5	60	M12x1,5	§21	
	06.06 -	M12x1,5x22, KG60°	30	2	S90-2-15-022			91215022	114,3/5	60	M12x1,5	§21	
	06.06 -		32	2	S90-2-16-003			91216003	114,3/5	60	M12x1,5	§21	
	06.06 -		40	2	S90-2-20-024		S23	91220024	114,3/5	60	M12x1,5	§21	
	06.06 -		42	7	S90-7-21-009			91721009	114,3/5	60	M12x1,5	§21	
	06.06 -		50	7	S90-7-25-037			91725037	114,3/5	60	M12x1,5	§21	
	06.06 -		60	7	S90-7-30-030			91730030	114,3/5	60	M12x1,5	§21	
SX4 Stufenheck (GY) ***SX4 Saloon (GY)***	10.07 -	S1-1-12-50-22-17	24	2	S90-2-12-009			91212009	114,3/5	60	M12x1,5	§21	
	10.07 -	M12x1,5x22, KG60°	30	2	S90-2-15-022			91215022	114,3/5	60	M12x1,5	§21	
	10.07 -		32	2	S90-2-16-003			91216003	114,3/5	60	M12x1,5	§21	
	10.07 -		40	2	S90-2-20-024		S23	91220024	114,3/5	60	M12x1,5	§21	
	10.07 -		42	7	S90-7-21-009			91721009	114,3/5	60	M12x1,5	§21	
	10.07 -		50	7	S90-7-25-037			91725037	114,3/5	60	M12x1,5	§21	
	10.07 -		60	7	S90-7-30-030			91730030	114,3/5	60	M12x1,5	§21	
Vitara (LY)													
	02.15 -	S1-1-12-50-22-17	24	2	S90-2-12-009			91212009	114,3/5	60	M12x1,5	T	20
	02.15 -	M12x1,5x22, KG60°	30	2	S90-2-15-022			91215022	114,3/5	60	M12x1,5	T	20
	02.15 -		32	2	S90-2-16-003			91216003	114,3/5	60	M12x1,5	T	20
	02.15 -		40	2	S90-2-20-024			91220024	114,3/5	60	M12x1,5	T	20
	02.15 -		42	7	S90-7-21-009			91721009	114,3/5	60	M12x1,5	T	20
	02.15 -		50	7	S90-7-25-037			91725037	114,3/5	60	M12x1,5	T	20
	02.15 -		60	7	S90-7-30-030			91730030	114,3/5	60	M12x1,5	T	20
TOYOTA													
4 RUNNER (RN10_, VZN13_, VZN10_, RN13_)	08.87 - 03.96		50	8	S90-8-25-002		S9, S11	91825002	139,7/6	106,5	M12x1,5	T	-22
	08.87 - 03.96		60	8	S90-8-30-002		S9, S11	91830002	139,7/6	106,5	M12x1,5	T	-22
AURIS (NRE15_, ZZE15_, ADE15_, ZRE15_, NDE15_)	10.06 -		30	4	S90-4-15-009		S9	91415009	114,3/5	60	M12x1,5	§21	
	10.06 -		30	6	S90-6-15-034		S33	91215022	114,3/5	60	M12x1,5	§21	
	10.06 -		40	4	S90-4-20-013		S9	91420013	114,3/5	60	M12x1,5	§21	
	10.06 -		40	6	S90-6-20-031		S33	91220024	114,3/5	60	M12x1,5	§21	
	10.06 -		50	4	S90-4-25-029		S9	91425029	114,3/5	60	M12x1,5	§21	
	10.06 -		60	4	S90-4-30-016		S9	91430016	114,3/5	60	M12x1,5	§21	
AURIS (NZE18_, ZRE18_)	10.12 -		30	4	S90-4-15-009		S9	91415009	114,3/5	60	M12x1,5	T	15
	10.12 -		30	6	S90-6-15-034		S33	91215022	114,3/5	60	M12x1,5	T	15
	10.12 -		40	4	S90-4-20-013		S9	91420013	114,3/5	60	M12x1,5	T	15
	10.12 -		40	6	S90-6-20-031		S33	91220024	114,3/5	60	M12x1,5	T	15
	10.12 -		50	4	S90-4-25-029		S9	91425029	114,3/5	60	M12x1,5	T	15
	10.12 -		60	4	S90-4-30-016		S9	91430016	114,3/5	60	M12x1,5	T	15

Modell | *Model*	Baujahr | *Year*	Original-radschraube (nicht bestellbar) | *Original Bolt (not available)*	Spurweiten-änd. Achse | *Total track widening* (mm)	Eibach System	Artikel-Nr. silber | *Part-No. silver*	Artikel-Nr. schwarz | *Part-No. black*	Hinweise | *Notes*	Kennzeichnung | *Stamping*	Lochkreis | - Anzahl | *Bolt pattern* | *No. of holes*	Zentrierung | *Centre bore* (mm)	Gewinde | *Thread*	Gutachten | *Homologation*	ET-Grenze | *Offset frontier*
TOYOTA													
AURIS TOURING SPORTS (ADE18_, ZWE18_, ZRE18_)													
	07.13 -		30	4	S90-4-15-009		S9	91415009	114,3/5	60	M12x1,5	T	15
	07.13 -		30	6	S90-6-15-034		S33	91215022	114,3/5	60	M12x1,5	T	15
	07.13 -		40	4	S90-4-20-013		S9	91420013	114,3/5	60	M12x1,5	T	15
	07.13 -		40	6	S90-6-20-031		S33	91220024	114,3/5	60	M12x1,5	T	15
	07.13 -		50	4	S90-4-25-029		S9	91425029	114,3/5	60	M12x1,5	T	15
	07.13 -		60	4	S90-4-30-016		S9	91430016	114,3/5	60	M12x1,5	T	15
AURIS VAN Kasten (NDE15_)													
AURIS VAN Box (NDE15_)	12.06 - 04.13		30	4	S90-4-15-009		S9	91415009	114,3/5	60	M12x1,5	§21	
	12.06 - 04.13		30	6	S90-6-15-034		S33	91215022	114,3/5	60	M12x1,5	§21	
	12.06 - 04.13		40	4	S90-4-20-013		S9	91420013	114,3/5	60	M12x1,5	§21	
	12.06 - 04.13		40	6	S90-6-20-031		S33	91220024	114,3/5	60	M12x1,5	§21	
	12.06 - 04.13		50	4	S90-4-25-029		S9	91425029	114,3/5	60	M12x1,5	§21	
	12.06 - 04.13		60	4	S90-4-30-016		S9	91430016	114,3/5	60	M12x1,5	§21	
AURIS VAN Kasten (ZRE18_, NZE18_)													
AURIS VAN Box (ZRE18_, NZE18_)	03.13 -		30	4	S90-4-15-009		S9	91415009	114,3/5	60	M12x1,5	T	15
	03.13 -		30	6	S90-6-15-034		S33	91215022	114,3/5	60	M12x1,5	T	15
	03.13 -		40	4	S90-4-20-013		S9	91420013	114,3/5	60	M12x1,5	T	15
	03.13 -		40	6	S90-6-20-031		S33	91220024	114,3/5	60	M12x1,5	T	15
	03.13 -		50	4	S90-4-25-029		S9	91425029	114,3/5	60	M12x1,5	T	15
	03.13 -		60	4	S90-4-30-016		S9	91430016	114,3/5	60	M12x1,5	T	15
AVENSIS (T25_)													
	04.03 - 11.08		20	6	S90-6-10-011		S33	91610011	100/5	54	M12x1,5	§21	
	04.03 - 11.08		30	6	S90-6-15-037		S33	91615037	100/5	54	M12x1,5	§21	
AVENSIS (T25_)													
	04.03 - 11.08		30	4	S90-4-15-009		S9	91415009	114,3/5	60	M12x1,5	T	9
	04.03 - 11.08		30	6	S90-6-15-034		S33	91215022	114,3/5	60	M12x1,5	T	9
	04.03 - 11.08		40	4	S90-4-20-013		S9	91420013	114,3/5	60	M12x1,5	T	9
	04.03 - 11.08		40	6	S90-6-20-031		S33	91220024	114,3/5	60	M12x1,5	T	9
	04.03 - 11.08		50	4	S90-4-25-029		S9	91425029	114,3/5	60	M12x1,5	T	9
	04.03 - 11.08		60	4	S90-4-30-016		S9	91430016	114,3/5	60	M12x1,5	T	9
AVENSIS Kombi (T25)													
AVENSIS Estate (T25)	04.03 - 11.08		20	6	S90-6-10-011		S33	91610011	100/5	54	M12x1,5	§21	
	04.03 - 11.08		30	6	S90-6-15-037		S33	91615037	100/5	54	M12x1,5	§21	
AVENSIS Kombi (T25)													
AVENSIS Estate (T25)	04.03 - 11.08		30	4	S90-4-15-009		S9	91415009	114,3/5	60	M12x1,5	T	9
	04.03 - 11.08		30	6	S90-6-15-034		S33	91215022	114,3/5	60	M12x1,5	T	9
	04.03 - 11.08		40	4	S90-4-20-013		S9	91420013	114,3/5	60	M12x1,5	T	9
	04.03 - 11.08		40	6	S90-6-20-031		S33	91220024	114,3/5	60	M12x1,5	T	9
	04.03 - 11.08		50	4	S90-4-25-029		S9	91425029	114,3/5	60	M12x1,5	T	9
	04.03 - 11.08		60	4	S90-4-30-016		S9	91430016	114,3/5	60	M12x1,5	T	9
AVENSIS Station Wagon (ZRT27, ADT27)													
AVENSIS Estate (ZRT27, ADT27)	02.09 -		30	4	S90-4-15-009		S9	91415009	114,3/5	60	M12x1,5	T	9
	02.09 -		30	6	S90-6-15-034		S33	91215022	114,3/5	60	M12x1,5	T	9
	02.09 -		40	4	S90-4-20-013		S9	91420013	114,3/5	60	M12x1,5	T	9
	02.09 -		40	6	S90-6-20-031		S33	91220024	114,3/5	60	M12x1,5	T	9
	02.09 -		50	4	S90-4-25-029		S9	91425029	114,3/5	60	M12x1,5	T	9
	02.09 -		60	4	S90-4-30-016		S9	91430016	114,3/5	60	M12x1,5	T	9
AVENSIS Stufenheck (T25)													
AVENSIS Saloon (T25)	04.03 - 11.08		20	6	S90-6-10-011		S33	91610011	100/5	54	M12x1,5	§21	
	04.03 - 11.08		30	6	S90-6-15-037		S33	91615037	100/5	54	M12x1,5	§21	
AVENSIS Stufenheck (T25)													
AVENSIS Saloon (T25)	04.03 - 11.08		30	4	S90-4-15-009		S9	91415009	114,3/5	60	M12x1,5	T	9
	04.03 - 11.08		30	6	S90-6-15-034		S33	91215022	114,3/5	60	M12x1,5	T	9
	04.03 - 11.08		40	4	S90-4-20-013		S9	91420013	114,3/5	60	M12x1,5	T	9
	04.03 - 11.08		40	6	S90-6-20-031		S33	91220024	114,3/5	60	M12x1,5	T	9
	04.03 - 11.08		50	4	S90-4-25-029		S9	91425029	114,3/5	60	M12x1,5	T	9
	04.03 - 11.08		60	4	S90-4-30-016		S9	91430016	114,3/5	60	M12x1,5	T	9
AVENSIS Stufenheck (ZRT27, ADT27)													
AVENSIS Saloon (ZRT27, ADT27)	11.08 -		30	4	S90-4-15-009		S9	91415009	114,3/5	60	M12x1,5	T	9
	11.08 -		30	6	S90-6-15-034		S33	91215022	114,3/5	60	M12x1,5	T	9
	11.08 -		40	4	S90-4-20-013		S9	91420013	114,3/5	60	M12x1,5	T	9
	11.08 -		40	6	S90-6-20-031		S33	91220024	114,3/5	60	M12x1,5	T	9
	11.08 -		50	4	S90-4-25-029		S9	91425029	114,3/5	60	M12x1,5	T	9
	11.08 -		60	4	S90-4-30-016		S9	91430016	114,3/5	60	M12x1,5	T	9
AYGO (WNB1_, KGB1_)													
	02.05 -	S1-1-12-50-20-17	10	1	S90-1-05-028		S11	91505008	100/4	54	M12x1,5	T	24
	02.05 -	M12x1,5x20, KG60°	30	2	S90-2-15-035			91615010	100/4	54	M12x1,5	T	24
	02.05 -		40	2	S90-2-20-023			91620026	100/4	54	M12x1,5	T	24
	02.05 -		50	7	S90-7-25-026			91725026	100/4	54	M12x1,5	T	24
AYGO (PAB4_, KGB4_)													
	05.14 -	S1-9-12-50-33-17	20	2	S90-2-10-017		S58	91210017	100/4	54	M12x1,5		
	05.14 -	M12x1,5x33, FB	30	2	S90-2-15-035		S58	91615010	100/4	54	M12x1,5		
	05.14 -		40	2	S90-2-20-023		S58	91620026	100/4	54	M12x1,5		
	05.14 -		50	7	S90-7-25-026			91725026	100/4	54	M12x1,5		
COROLLA (ZZE12_, NDE12_, ZDE12_)													
	11.01 - 02.07		30	6	S90-6-15-041		S33	91615010	100/4	54	M12x1,5	T	15
	11.01 - 02.07		40	4	S90-4-20-011		S9	91420011	100/4	54	M12x1,5	T	15
	11.01 - 02.07		40	6	S90-6-20-032		S33	91620026	100/4	54	M12x1,5	T	15
	11.01 - 02.07		60	4	S90-4-30-021		S9	91430021	100/4	54	M12x1,5	T	15
COROLLA Kombi (_E12J_, _E12T_)													
COROLLA Estate (_E12J_, _E12T_)	12.01 - 02.07		30	6	S90-6-15-041		S33	91615010	100/4	54	M12x1,5	T	15
	12.01 - 02.07		40	4	S90-4-20-011		S9	91420011	100/4	54	M12x1,5	T	15
	12.01 - 02.07		40	6	S90-6-20-032		S33	91620026	100/4	54	M12x1,5	T	15
	12.01 - 02.07		60	4	S90-4-30-021		S9	91430021	100/4	54	M12x1,5	T	15
COROLLA Stufenheck (_E12J_, _E12T_)													
COROLLA Estate (_E12J_, _E12T_)	03.01 - 03.08		30	6	S90-6-15-041		S33	91615010	100/4	54	M12x1,5	T	15
	03.01 - 03.08		40	4	S90-4-20-011		S9	91420011	100/4	54	M12x1,5	T	15
	03.01 - 03.08		40	6	S90-6-20-032		S33	91620026	100/4	54	M12x1,5	T	15
	03.01 - 03.08		60	4	S90-4-30-021		S9	91430021	100/4	54	M12x1,5	T	15

Modell | *Model*	Baujahr | *Year*	Original-radschraube (nicht bestellbar) | *Original Bolt (not available)*	Spurweiten-änd. Achse | *Total track widening* (mm)	Eibach System	Artikel-Nr. silber | *Part-No. silver*	Artikel-Nr. schwarz | *Part-No. black*	Hinweise | *Notes*	Kennzeichnung | *Stamping*	Lochkreis | - Anzahl | *Bolt pattern* | *No. of holes*	Zentrierung | *Centre bore* (mm)	Gewinde | *Thread*	Gutachten | *Homologation*	ET-Grenze | *Offset frontier*
TOYOTA													
COROLLA Verso (ZDE12_, CDE12_)													
	09.01 - 05.04		30	6	S90-6-15-041		S33	91615010	100/4	54	M12x1,5	T	15
	09.01 - 05.04		40	4	S90-4-20-011		S9	91420011	100/4	54	M12x1,5	T	15
	09.01 - 05.04		40	6	S90-6-20-032		S33	91620026	100/4	54	M12x1,5	T	15
	09.01 - 05.04		60	4	S90-4-30-021		S9	91430021	100/4	54	M12x1,5	T	15
COROLLA Verso (ZER_, ZZE_, R1_)													
	03.04 - 04.09		30	4	S90-4-15-009		S9	91415009	114,3/5	60	M12x1,5	T	20
	03.04 - 04.09		30	6	S90-6-15-034		S33	91215022	114,3/5	60	M12x1,5	T	20
	03.04 - 04.09		40	4	S90-4-20-013		S9	91420013	114,3/5	60	M12x1,5	T	20
	03.04 - 04.09		40	6	S90-6-20-031		S33	91220024	114,3/5	60	M12x1,5	T	20
	03.04 - 04.09		50	4	S90-4-25-029		S9	91425029	114,3/5	60	M12x1,5	T	20
	03.04 - 04.09		60	4	S90-4-30-016		S9	91430016	114,3/5	60	M12x1,5	T	20
GT 86 Coupe (ZN6_)													
	03.12 -		20	6	S90-6-10-003		S16, S33	91610003	100/5	56	M12x1,25	T	18
	03.12 -		30	4	S90-4-15-016		S9	91415016	100/5	56	M12x1,25	T	18
	03.12 -		40	4	S90-4-20-002		S9	91420002	100/5	56	M12x1,25	T	18
	03.12 -		50	4	S90-4-25-017		S9	91425017	100/5	56	M12x1,25	T	18
	03.12 -		60	4	S90-4-30-030		S9	91430030	100/5	56	M12x1,25	T	18
HILUX II Pick-up (RN6_, RN5_, LN6_, YN6_, YN5_, LN5_)													
HILUX II Pickup (RN6_, RN5_, LN6_, YN6_, YN5_, LN5_)	08.93 - 07.05		50	8	S90-8-25-002		S9, S11	91825002	139,7/6	106,5	M12x1,5	T	-30
	08.93 - 07.05		60	8	S90-8-30-002		S9, S11	91830002	139,7/6	106,5	M12x1,5	T	-30
LAND CRUISER (PZJ7_, KZJ7_, HZJ7_, BJ7_, LJ7_, RJ7_)													
	03.84 -		50	8	S90-8-25-002		S9, S11	91825002	139,7/6	106,5	M12x1,5	T	-50
	03.84 -		60	8	S90-8-30-002		S9, S11	91830002	139,7/6	106,5	M12x1,5	T	-50
LAND CRUISER (KDJ12_, GRJ12_)													
	09.02 -		50	8	S90-8-25-004		S9, S11	91825004	139,7/6	108,5	M12x1,5	§21	
	09.02 -		60	8	S90-8-30-004		S9, S11	91830004	139,7/6	108,5	M12x1,5	§21	
LAND CRUISER 80 (_J8_)													
	01.90 - 02.98		50	8	S90-8-25-002		S9, S11	91825002	139,7/6	106,5	M12x1,5	T	-30
	01.90 - 02.98		60	8	S90-8-30-002		S9, S11	91830002	139,7/6	106,5	M12x1,5	T	-30
LAND CRUISER 90 (_J9_)													
	04.95 -		50	8	S90-8-25-004		S9, S11	91825004	139,7/6	108,5	M12x1,5	T	-30
	04.95 -		60	8	S90-8-30-004		S9, S11	91830004	139,7/6	108,5	M12x1,5	T	-30
LAND CRUISER Hardtop (_J7_)													
	07.90 - 05.96		50	8	S90-8-25-002		S9, S11	91825002	139,7/6	106,5	M12x1,5	T	-50
	07.90 - 05.96		60	8	S90-8-30-002		S9, S11	91830002	139,7/6	106,5	M12x1,5	T	-50
RAV 4 I (SXA1_)													
	01.94 - 09.00		30	4	S90-4-15-009		S9	91415009	114,3/5	60	M12x1,5	T	5
	01.94 - 09.00		40	4	S90-4-20-013		S9	91420013	114,3/5	60	M12x1,5	T	5
	01.94 - 09.00		50	4	S90-4-25-029		S9	91425029	114,3/5	60	M12x1,5	T	5
	01.94 - 09.00		60	4	S90-4-30-016		S9	91430016	114,3/5	60	M12x1,5	T	5
RAV 4 I Cabrio (SXA1_)													
RAV 4 I Convertible (SXA1_)	12.97 - 06.00		30	4	S90-4-15-009		S9	91415009	114,3/5	60	M12x1,5	T	5
	12.97 - 06.00		40	4	S90-4-20-013		S9	91420013	114,3/5	60	M12x1,5	T	5
	12.97 - 06.00		50	4	S90-4-25-029		S9	91425029	114,3/5	60	M12x1,5	T	5
	12.97 - 06.00		60	4	S90-4-30-016		S9	91430016	114,3/5	60	M12x1,5	T	5
RAV 4 II (CLA2_, XA2_, ZCA2_, ACA2_)													
	06.00 - 11.05		30	4	S90-4-15-009		S9	91415009	114,3/5	60	M12x1,5	T	15
	06.00 - 11.05		30	6	S90-6-15-034		S33	91215022	114,3/5	60	M12x1,5	T	15
	06.00 - 11.05		40	4	S90-4-20-013		S9	91420013	114,3/5	60	M12x1,5	T	15
	06.00 - 11.05		40	6	S90-6-20-031		S33	91220024	114,3/5	60	M12x1,5	T	15
	06.00 - 11.05		50	4	S90-4-25-029		S9	91425029	114,3/5	60	M12x1,5	T	15
	06.00 - 11.05		60	4	S90-4-30-016		S9	91430016	114,3/5	60	M12x1,5	T	15
RAV 4 III (ACA3_, ACE_, ALA3_, GSA3_, ZSA3_)													
	11.05 -		30	4	S90-4-15-009		S9	91415009	114,3/5	60	M12x1,5	T	15
	11.05 -		30	6	S90-6-15-034		S33	91215022	114,3/5	60	M12x1,5	T	15
	11.05 -		40	4	S90-4-20-013		S9	91420013	114,3/5	60	M12x1,5	T	15
	11.05 -		40	6	S90-6-20-031		S33	91220024	114,3/5	60	M12x1,5	T	15
	11.05 -		50	4	S90-4-25-029		S9	91425029	114,3/5	60	M12x1,5	T	15
	11.05 -		60	4	S90-4-30-016		S9	91430016	114,3/5	60	M12x1,5	T	15
RAV 4 IV (ZSA4_, ALA4_)													
	12.12 -		30	4	S90-4-15-009		S9	91415009	114,3/5	60	M12x1,5	T	15
	12.12 -		30	6	S90-6-15-034		S33	91215022	114,3/5	60	M12x1,5	T	15
	12.12 -		40	4	S90-4-20-013		S9	91420013	114,3/5	60	M12x1,5	T	15
	12.12 -		40	6	S90-6-20-031		S33	91220024	114,3/5	60	M12x1,5	T	15
	12.12 -		50	4	S90-4-25-029		S9	91425029	114,3/5	60	M12x1,5	T	15
	12.12 -		60	4	S90-4-30-016		S9	91430016	114,3/5	60	M12x1,5	T	15
URBAN CRUISER (NSP1_, NLP1_, ZSP1_, NCP11_)													
	07.07 -		20	6	S90-6-10-011		S33	91610011	100/5	54	M12x1,5	T	9
	07.07 -		30	6	S90-6-15-037		S33	91615037	100/5	54	M12x1,5	T	9
VERSO S (NLP12_, NCP12_, NSP12_)													
	11.10 -		20	6	S90-6-10-011		S33	91610011	100/5	54	M12x1,5	T	15
	11.10 -		30	6	S90-6-15-037		S33	91615037	100/5	54	M12x1,5	T	15
VIOS/YARIS Stufenheck (ZSP9_, NCP9_)													
VIOS/YARIS Saloon (ZSP9_, NCP9_)	08.07 -		30	6	S90-6-15-041			S33	91615010	100/4	54	M12x1,5	§21
	08.07 -		40	4	S90-4-20-011			S9	91420011	100/4	54	M12x1,5	§21
	08.07 -		40	6	S90-6-20-032			S33	91620026	100/4	54	M12x1,5	§21
	08.07 -		60	4	S90-4-30-021			S9	91430021	100/4	54	M12x1,5	§21
YARIS (SCP1_, NLP1_, NCP1_)													
	01.99 - 12.05		30	6	S90-6-15-041			S33	91615010	100/4	54	M12x1,5	T	20
	01.99 - 12.05		40	4	S90-4-20-011			S9	91420011	100/4	54	M12x1,5	T	20
	01.99 - 12.05		40	6	S90-6-20-032			S33	91620026	100/4	54	M12x1,5	T	20
	01.99 - 12.05		60	4	S90-4-30-021			S9	91430021	100/4	54	M12x1,5	T	20
YARIS (SCP9_, NSP9_, KSP9_, NCP9_, ZSP9_)													
	08.05 -		30	6	S90-6-15-041			S33	91615010	100/4	54	M12x1,5	§21	
	08.05 -		40	4	S90-4-20-011			S9	91420011	100/4	54	M12x1,5	§21	
	08.05 -		40	6	S90-6-20-032			S33	91620026	100/4	54	M12x1,5	§21	
	08.05 -		60	4	S90-4-30-021			S9	91430021	100/4	54	M12x1,5	§21	

Modell | *Model*	Baujahr | *Year*	Original-radschraube (nicht bestellbar) | *Original Bolt (not available)*	Spurweiten-änd. Achse | *Total track widening* (mm)	Eibach System	Artikel-Nr. silber | *Part-No. silver*	Artikel-Nr. schwarz | *Part-No. black*	Hinweise | *Notes*	Kennzeichnung | *Stamping*	Lochkreis | - Anzahl | *Bolt pattern* | *No. of holes*	Zentrierung | *Centre bore* (mm)	Gewinde | *Thread*	Gutachten | *Homologation*	ET-Grenze | *Offset frontier*
TOYOTA													
YARIS (NLP13_, NSP13_, NCP13_, KSP13_)													
	12.10 -		30	6	S90-6-15-041		S33	91615010	100/4	54	M12x1,5	T	9
	12.10 -		40	4	S90-4-20-011		S9	91420011	100/4	54	M12x1,5	T	9
	12.10 -		40	6	S90-6-20-032		S33	91620026	100/4	54	M12x1,5	T	9
	12.10 -		60	4	S90-4-30-021		S9	91430021	100/4	54	M12x1,5	T	9
VOLKSWAGEN													
AMAROK													
	09.10 -	S4-7-14-50-35-19	24	2	S90-2-12-001		S73	91212001	120/5	65	M14x1,5	T	13
	09.10 -	M14x1,5x35, KU r=14	30	2	S90-2-15-034		S73	91215034	120/5	65	M14x1,5	T	13
	09.10 -		40	7	S90-7-20-013		S28, S73	91720013	120/5	65	M14x1,5	T	13
	09.10 -		50	7	S90-7-25-018		S28, S73	91725018	120/5	65	M14x1,5	T	13
	09.10 -		60	7	S90-7-30-056		S73	91730056	120/5	65	M14x1,5	T	13
BEETLE (5C1)													
	04.11 -	S1-6-14-50-27-17	24	2	S90-2-12-003			91212003	112/5	57	M14x1,5	T	3
	04.11 -	M14x1,5x27, KU r=13	30	2	S90-2-15-013			91215013	112/5	57	M14x1,5	T	3
	04.11 -		40	2	S90-2-20-003			91220003	112/5	57	M14x1,5	T	3
	04.11 -		40	7	S90-7-20-017			91720017	112/5	57	M14x1,5	T	3
	04.11 -		50	7	S90-7-25-005			91725005	112/5	57	M14x1,5	T	3
	04.11 -		60	7	S90-7-30-012			91730012	112/5	57	M14x1,5	T	3
BEETLE Cabriolet (5C7)													
BEETLE Convertible (5C7)	12.12 -	S1-6-14-50-27-17	24	2	S90-2-12-003			91212003	112/5	57	M14x1,5	T	3
	12.12 -	M14x1,5x27, KU r=13	30	2	S90-2-15-013			91215013	112/5	57	M14x1,5	T	3
	12.12 -		40	2	S90-2-20-003			91220003	112/5	57	M14x1,5	T	3
	12.12 -		40	7	S90-7-20-017			91720017	112/5	57	M14x1,5	T	3
	12.12 -		50	7	S90-7-25-005			91725005	112/5	57	M14x1,5	T	3
	12.12 -		60	7	S90-7-30-012			91730012	112/5	57	M14x1,5	T	3
BORA (1J2)													
	10.98 - 09.05	S1-6-14-50-27-17	10	1	S90-1-05-006		S11	91105006	100/5	57	M14x1,5	T	13
	10.98 - 09.05	M14x1,5x27, KU r=13	16	1	S90-1-08-001		S11	91108001	100/5	57	M14x1,5	T	13
	10.98 - 09.05		30	2	S90-2-15-005			91215005	100/5	57	M14x1,5	T	13
	10.98 - 09.05		40	2	S90-2-20-004			91220004	100/5	57	M14x1,5	T	13
	10.98 - 09.05		50	7	S90-7-25-003			91725003	100/5	57	M14x1,5	T	13
BORA Kombi (1J6)													
BORA Estate (1J6)	05.99 - 05.05	S1-6-14-50-27-17	10	1	S90-1-05-006		S11	91105006	100/5	57	M14x1,5	T	13
	05.99 - 05.05	M14x1,5x27, KU r=13	16	1	S90-1-08-001		S11	91108001	100/5	57	M14x1,5	T	13
	05.99 - 05.05		30	2	S90-2-15-005			91215005	100/5	57	M14x1,5	T	13
	05.99 - 05.05		40	2	S90-2-20-004			91220004	100/5	57	M14x1,5	T	13
	05.99 - 05.05		50	7	S90-7-25-003			91725003	100/5	57	M14x1,5	T	13
CC (358)													
	11.11 -	S1-6-14-50-27-17	10	1	S90-1-05-016		S11	91105016	112/5	57	M14x1,5	T	14
	11.11 -	M14x1,5x27, KU r=13	24	2	S90-2-12-003		S63	91212003	112/5	57	M14x1,5	T	14
	11.11 -		30	2	S90-2-15-013			91215013	112/5	57	M14x1,5	T	14
	11.11 -		40	2	S90-2-20-003			91220003	112/5	57	M14x1,5	T	14
	11.11 -		40	7	S90-7-20-017			91720017	112/5	57	M14x1,5	T	14
	11.11 -		50	7	S90-7-25-005			91725005	112/5	57	M14x1,5	T	14
	11.11 -		60	7	S90-7-30-012			91730012	112/5	57	M14x1,5	T	14
EOS (1F7, 1F8)													
	03.06 -	S1-6-14-50-27-17	24	2	S90-2-12-003		S63	91212003	112/5	57	M14x1,5	T	15
	03.06 -	M14x1,5x27, KU r=13	30	2	S90-2-15-013			91215013	112/5	57	M14x1,5	T	15
	03.06 -		40	2	S90-2-20-003			91220003	112/5	57	M14x1,5	T	15
	03.06 -		40	7	S90-7-20-017			91720017	112/5	57	M14x1,5	T	15
	03.06 -		50	7	S90-7-25-005			91725005	112/5	57	M14x1,5	T	15
	03.06 -		60	7	S90-7-30-012			91730012	112/5	57	M14x1,5	T	15
FOX (5Z1, 5Z3)													
	10.03 -	S1-6-14-50-27-17	10	1	S90-1-05-006		S11	91105006	100/5	57	M14x1,5	T	5
	10.03 -	M14x1,5x27, KU r=13	30	2	S90-2-15-005			91215005	100/5	57	M14x1,5	T	5
	10.03 -		40	2	S90-2-20-004			91220004	100/5	57	M14x1,5	T	5
	10.03 -		50	7	S90-7-25-003			91725003	100/5	57	M14x1,5	T	5
GOLF II (19E, 1G1)													
	08.83 - 12.92	S1-6-12-50-24-17	10	1	S90-1-05-010		S11	91105010	100/4	57	M12x1,5	T	20
	08.83 - 12.92	M12x1,5x24, KU r=13	16	1	S90-1-08-003		S11	91108003	100/4	57	M12x1,5	T	20
	08.83 - 12.92		30	2	S90-2-15-004		S13	91215004	100/4	57	M12x1,5	T	20
	08.83 - 12.92		40	2	S90-2-20-011			91220011	100/4	57	M12x1,5	T	20
	08.83 - 12.92		50	7	S90-7-25-001			91725001	100/4	57	M12x1,5	T	20
GOLF III (1H1)													
	08.91 - 07.98	S1-6-12-50-27-17	10	1	S90-1-05-010		S11	91105010	100/4	57	M12x1,5	T	10
	08.91 - 07.98	M12x1,5x27, KU r=13	16	1	S90-1-08-003		S11	91108003	100/4	57	M12x1,5	T	10
	08.91 - 07.98		30	2	S90-2-15-004		S13	91215004	100/4	57	M12x1,5	T	10
	08.91 - 07.98		40	2	S90-2-20-011			91220011	100/4	57	M12x1,5	T	10
	08.91 - 07.98		50	7	S90-7-25-001			91725001	100/4	57	M12x1,5	T	10
GOLF III (1H1)													
	08.91 - 07.98	S1-6-14-50-27-17	10	1	S90-1-05-006		S11	91105006	100/5	57	M14x1,5	T	10
	08.91 - 07.98	M14x1,5x27, KU r=13	16	1	S90-1-08-001		S11	91108001	100/5	57	M14x1,5	T	10
	08.91 - 07.98		30	2	S90-2-15-005			91215005	100/5	57	M14x1,5	T	10
	08.91 - 07.98		40	2	S90-2-20-004			91220004	100/5	57	M14x1,5	T	10
	08.91 - 07.98		50	7	S90-7-25-003			91725003	100/5	57	M14x1,5	T	10
GOLF III Cabriolet (1E7)													
GOLF III Convertible (1E7)	07.93 - 05.98	S1-6-12-50-27-17	10	1	S90-1-05-010		S11	91105010	100/4	57	M12x1,5	T	10
	07.93 - 05.98	M12x1,5x27, KU r=13	16	1	S90-1-08-003		S11	91108003	100/4	57	M12x1,5	T	10
	07.93 - 05.98		30	2	S90-2-15-004		S13	91215004	100/4	57	M12x1,5	T	10
	07.93 - 05.98		40	2	S90-2-20-011			91220011	100/4	57	M12x1,5	T	10
	07.93 - 05.98		50	7	S90-7-25-001			91725001	100/4	57	M12x1,5	T	10
GOLF III Cabriolet (1E7)													
GOLF III Convertible (1E7)	07.93 - 05.98	S1-6-14-50-27-17	10	1	S90-1-05-006		S11	91105006	100/5	57	M14x1,5	T	10
	07.93 - 05.98	M14x1,5x27, KU r=13	16	1	S90-1-08-001		S11	91108001	100/5	57	M14x1,5	T	10
	07.93 - 05.98		30	2	S90-2-15-005			91215005	100/5	57	M14x1,5	T	10
	07.93 - 05.98		40	2	S90-2-20-004			91220004	100/5	57	M14x1,5	T	10
	07.93 - 05.98		50	7	S90-7-25-003			91725003	100/5	57	M14x1,5	T	10
GOLF III Variant (1H5)													
	07.93 - 04.99	S1-6-12-50-27-17	10	1	S90-1-05-010		S11	91105010	100/4	57	M12x1,5	T	10
	07.93 - 04.99	M12x1,5x27, KU r=13	16	1	S90-1-08-003		S11	91108003	100/4	57	M12x1,5	T	10
	07.93 - 04.99		30	2	S90-2-15-004		S13	91215004	100/4	57	M12x1,5	T	10
	07.93 - 04.99		40	2	S90-2-20-011			91220011	100/4	57	M12x1,5	T	10
	07.93 - 04.99		50	7	S90-7-25-001			91725001	100/4	57	M12x1,5	T	10

Modell | *Model*	Baujahr | *Year*	Original-radschraube (nicht bestellbar) | *Original Bolt (not available)*	Spurweiten-änd. Achse | *Total track widening* (mm)	Eibach System	Artikel-Nr. silber | *Part-No. silver*	Artikel-Nr. schwarz | *Part-No. black*	Hinweise | *Notes*	Kennzeichnung | *Stamping*	Lochkreis | - Anzahl | *Bolt pattern* | *No. of holes*	Zentrierung | *Centre bore* (mm)	Gewinde | *Thread*	Gutachten | *Homologation*	ET-Grenze | *Offset frontier*
VOLKSWAGEN													
GOLF III Variant (1H5)													
	07.93 - 04.99	S1-6-14-50-27-17	10	1	S90-1-05-006		S11	91105006	100/5	57	M14x1,5	T	10
	07.93 - 04.99	M14x1,5x27, KU r=13	16	1	S90-1-08-001		S11	91108001	100/5	57	M14x1,5	T	10
	07.93 - 04.99		30	2	S90-2-15-005			91215005	100/5	57	M14x1,5	T	10
	07.93 - 04.99		40	2	S90-2-20-004			91220004	100/5	57	M14x1,5	T	10
	07.93 - 04.99		50	7	S90-7-25-003			91725003	100/5	57	M14x1,5	T	10
GOLF IV (1J1)													
	08.97 - 06.05	S1-6-14-50-27-17	10	1	S90-1-05-006		S11	91105006	100/5	57	M14x1,5	T	13
	08.97 - 06.05	M14x1,5x27, KU r=13	16	1	S90-1-08-001		S11	91108001	100/5	57	M14x1,5	T	13
	08.97 - 06.05		30	2	S90-2-15-005			91215005	100/5	57	M14x1,5	T	13
	08.97 - 06.05		40	2	S90-2-20-004			91220004	100/5	57	M14x1,5	T	13
	08.97 - 06.05		50	7	S90-7-25-003			91725003	100/5	57	M14x1,5	T	13
GOLF IV Cabriolet (1E7)													
GOLF IV Convertible (1E7)	06.98 - 06.02	S1-6-12-50-27-17	10	1	S90-1-05-010		S11	91105010	100/4	57	M12x1,5	T	10
	06.98 - 06.02	M12x1,5x27, KU r=13	16	1	S90-1-08-003		S11	91108003	100/4	57	M12x1,5	T	10
	06.98 - 06.02		30	2	S90-2-15-004		S13	91215004	100/4	57	M12x1,5	T	10
	06.98 - 06.02		40	2	S90-2-20-011			91220011	100/4	57	M12x1,5	T	10
	06.98 - 06.02		50	7	S90-7-25-001			91725001	100/4	57	M12x1,5	T	10
GOLF IV Cabriolet (1E7)													
GOLF IV Convertible (1E7)	06.98 - 06.02	S1-6-14-50-27-17	10	1	S90-1-05-006		S11	91105006	100/5	57	M14x1,5	T	10
	06.98 - 06.02	M14x1,5x27, KU r=13	16	1	S90-1-08-001		S11	91108001	100/5	57	M14x1,5	T	10
	06.98 - 06.02		30	2	S90-2-15-005			91215005	100/5	57	M14x1,5	T	10
	06.98 - 06.02		40	2	S90-2-20-004			91220004	100/5	57	M14x1,5	T	10
	06.98 - 06.02		50	7	S90-7-25-003			91725003	100/5	57	M14x1,5	T	10
GOLF IV Variant (1J5)													
	05.99 - 06.06	S1-6-14-50-27-17	10	1	S90-1-05-006		S11	91105006	100/5	57	M14x1,5	T	13
	05.99 - 06.06	M14x1,5x27, KU r=13	16	1	S90-1-08-001		S11	91108001	100/5	57	M14x1,5	T	13
	05.99 - 06.06		30	2	S90-2-15-005			91215005	100/5	57	M14x1,5	T	13
	05.99 - 06.06		40	2	S90-2-20-004			91220004	100/5	57	M14x1,5	T	13
	05.99 - 06.06		50	7	S90-7-25-003			91725003	100/5	57	M14x1,5	T	13
GOLF PLUS (5M1, 521)													
	01.05 - 12.13	S1-6-14-50-27-17	24	2	S90-2-12-003		S63	91212003	112/5	57	M14x1,5	T	32
	01.05 - 12.13	M14x1,5x27, KU r=13	30	2	S90-2-15-013			91215013	112/5	57	M14x1,5	T	32
	01.05 - 12.13		40	2	S90-2-20-003			91220003	112/5	57	M14x1,5	T	32
	01.05 - 12.13		40	7	S90-7-20-017			91720017	112/5	57	M14x1,5	T	32
	01.05 - 12.13		50	7	S90-7-25-005			91725005	112/5	57	M14x1,5	T	32
	01.05 - 12.13		60	7	S90-7-30-012			91730012	112/5	57	M14x1,5	T	32
GOLF V (1K1)													
	10.03 - 02.09	S1-6-14-50-27-17	10	1	S90-1-05-016		S11	91105016	112/5	57	M14x1,5	T	17
	10.03 - 02.09	M14x1,5x27, KU r=13	24	2	S90-2-12-003		S63	91212003	112/5	57	M14x1,5	T	17
	10.03 - 02.09		30	2	S90-2-15-013			91215013	112/5	57	M14x1,5	T	17
	10.03 - 02.09		40	2	S90-2-20-003			91220003	112/5	57	M14x1,5	T	17
	10.03 - 02.09		40	7	S90-7-20-017			91720017	112/5	57	M14x1,5	T	17
	10.03 - 02.09		50	7	S90-7-25-005			91725005	112/5	57	M14x1,5	T	17
	10.03 - 02.09		60	7	S90-7-30-012			91730012	112/5	57	M14x1,5	T	17
GOLF V Variant (1K5)													
	06.07 - 07.09	S1-6-14-50-27-17	10	1	S90-1-05-016		S11	91105016	112/5	57	M14x1,5	T	17
	06.07 - 07.09	M14x1,5x27, KU r=13	24	2	S90-2-12-003		S63	91212003	112/5	57	M14x1,5	T	17
	06.07 - 07.09		30	2	S90-2-15-013			91215013	112/5	57	M14x1,5	T	17
	06.07 - 07.09		40	2	S90-2-20-003			91220003	112/5	57	M14x1,5	T	17
	06.07 - 07.09		40	7	S90-7-20-017			91720017	112/5	57	M14x1,5	T	17
	06.07 - 07.09		50	7	S90-7-25-005			91725005	112/5	57	M14x1,5	T	17
	06.07 - 07.09		60	7	S90-7-30-012			91730012	112/5	57	M14x1,5	T	17
GOLF VI (5K1)													
	10.08 - 11.13	S1-6-14-50-27-17	24	2	S90-2-12-003		S76	91212003	112/5	57	M14x1,5	T	20
	10.08 - 11.13	M14x1,5x27, KU r=13	30	2	S90-2-15-013			91215013	112/5	57	M14x1,5	T	20
	10.08 - 11.13		40	2	S90-2-20-003			91220003	112/5	57	M14x1,5	T	20
	10.08 - 11.13		40	7	S90-7-20-017			91720017	112/5	57	M14x1,5	T	20
	10.08 - 11.13		50	7	S90-7-25-005			91725005	112/5	57	M14x1,5	T	20
	10.08 - 11.13		60	7	S90-7-30-012			91730012	112/5	57	M14x1,5	T	20
GOLF VI Cabriolet (517)													
GOLF VI Convertible (517)	03.11 -	S1-6-14-50-27-17	24	2	S90-2-12-003		S74	91212003	112/5	57	M14x1,5	T	20
	03.11 -	M14x1,5x27, KU r=13	30	2	S90-2-15-013			91215013	112/5	57	M14x1,5	T	20
	03.11 -		40	2	S90-2-20-003			91220003	112/5	57	M14x1,5	T	20
	03.11 -		40	7	S90-7-20-017			91720017	112/5	57	M14x1,5	T	20
	03.11 -		50	7	S90-7-25-005			91725005	112/5	57	M14x1,5	T	20
	03.11 -		60	7	S90-7-30-012			91730012	112/5	57	M14x1,5	T	20
GOLF VI Variant (AJ5)													
	07.09 - 07.13	S1-6-14-50-27-17	24	2	S90-2-12-003		S74	91212003	112/5	57	M14x1,5	T	20
	07.09 - 07.13	M14x1,5x27, KU r=13	30	2	S90-2-15-013			91215013	112/5	57	M14x1,5	T	20
	07.09 - 07.13		40	2	S90-2-20-003			91220003	112/5	57	M14x1,5	T	20
	07.09 - 07.13		40	7	S90-7-20-017			91720017	112/5	57	M14x1,5	T	20
	07.09 - 07.13		50	7	S90-7-25-005			91725005	112/5	57	M14x1,5	T	20
	07.09 - 07.13		60	7	S90-7-30-012			91730012	112/5	57	M14x1,5	T	20
GOLF VII (5G1)													
	08.12 -	S1-6-14-50-27-17	20	2	S90-2-10-027		S74	91210027	112/5	57	M14x1,5	T	18
	08.12 -	M14x1,5x27, KU r=13	24	2	S90-2-12-003			91212003	112/5	57	M14x1,5	T	18
	08.12 -		30	2	S90-2-15-013			91215013	112/5	57	M14x1,5	T	18
	08.12 -		40	2	S90-2-20-003			91220003	112/5	57	M14x1,5	T	18
	08.12 -		40	7	S90-7-20-017			91720017	112/5	57	M14x1,5	T	18
	08.12 -		50	7	S90-7-25-005			91725005	112/5	57	M14x1,5	T	18
	08.12 -		60	7	S90-7-30-012			91730012	112/5	57	M14x1,5	T	18
GOLF VII Alltrack (BA5)													
	12.14 -	S1-6-14-50-27-17	20	2	S90-2-10-027		S3	91210027	112/5	57	M14x1,5	T	18
	12.14 -	M14x1,5x27, KU r=13	24	2	S90-2-12-003			91212003	112/5	57	M14x1,5	T	18
	12.14 -		30	2	S90-2-15-013			91215013	112/5	57	M14x1,5	T	18
	12.14 -		40	2	S90-2-20-003			91220003	112/5	57	M14x1,5	T	18
	12.14 -		40	7	S90-7-20-017			91720017	112/5	57	M14x1,5	T	18
	12.14 -		50	7	S90-7-25-005			91725005	112/5	57	M14x1,5	T	18
	12.14 -		60	7	S90-7-30-012			91730012	112/5	57	M14x1,5	T	18
GOLF VII Variant (BA5)													
	04.13 -	S1-6-14-50-27-17	20	2	S90-2-10-027		S74	91210027	112/5	57	M14x1,5	T	18
	04.13 -	M14x1,5x27, KU r=13	24	2	S90-2-12-003			91212003	112/5	57	M14x1,5	T	18
	04.13 -		30	2	S90-2-15-013			91215013	112/5	57	M14x1,5	T	18
	04.13 -		40	2	S90-2-20-003			91220003	112/5	57	M14x1,5	T	18
	04.13 -		40	7	S90-7-20-017			91720017	112/5	57	M14x1,5	T	18
	04.13 -		50	7	S90-7-25-005			91725005	112/5	57	M14x1,5	T	18
	04.13 -		60	7	S90-7-30-012			91730012	112/5	57	M14x1,5	T	18

Modell | *Model*	Baujahr | *Year*	Original-radschraube (nicht bestellbar) | *Original Bolt (not available)*	Spurweiten-änd. Achse | *Total track widening* (mm)	Eibach System	Artikel-Nr. silber | *Part-No. silver*	Artikel-Nr. schwarz | *Part-No. black*	Hinweise | *Notes*	Kennzeichnung | *Stamping*	Lochkreis | - Anzahl | *Bolt pattern* | *No. of holes*	Zentrierung | *Centre bore* (mm)	Gewinde | *Thread*	Gutachten | *Homologation*	ET-Grenze | *Offset frontier*
VOLKSWAGEN													
GOLF VII Sportsvan													
	02.14 -	S1-6-14-50-27-17	20	2	S90-2-10-027		S74	91210027	112/5	57	M14x1,5	T	18
	02.14 -	M14x1,5x27, KU r=13	24	2	S90-2-12-003			91212003	112/5	57	M14x1,5	T	18
	02.14 -		30	2	S90-2-15-013			91215013	112/5	57	M14x1,5	T	18
	02.14 -		40	2	S90-2-20-003			91220003	112/5	57	M14x1,5	T	18
	02.14 -		40	7	S90-7-20-017			91720017	112/5	57	M14x1,5	T	18
	02.14 -		50	7	S90-7-25-005			91725005	112/5	57	M14x1,5	T	18
	02.14 -		60	7	S90-7-30-012			91730012	112/5	57	M14x1,5	T	18
JETTA III (1K2)													
	08.05 - 10.10	S1-6-14-50-27-17	10	1	S90-1-05-016		S11	91105016	112/5	57	M14x1,5	T	17
	08.05 - 10.10	M14x1,5x27, KU r=13	24	2	S90-2-12-003		S63	91212003	112/5	57	M14x1,5	T	17
	08.05 - 10.10		30	2	S90-2-15-013			91215013	112/5	57	M14x1,5	T	17
	08.05 - 10.10		40	2	S90-2-20-003			91220003	112/5	57	M14x1,5	T	17
	08.05 - 10.10		40	7	S90-7-20-017			91720017	112/5	57	M14x1,5	T	17
	08.05 - 10.10		50	7	S90-7-25-005			91725005	112/5	57	M14x1,5	T	17
	08.05 - 10.10		60	7	S90-7-30-012			91730012	112/5	57	M14x1,5	T	17
JETTA IV (162)													
	04.10 -	S1-6-14-50-27-17	20	2	S90-2-10-027		S74	91210027	112/5	57	M14x1,5	T	17
	04.10 -	M14x1,5x27, KU r=13	24	2	S90-2-12-003		S63	91212003	112/5	57	M14x1,5	T	17
	04.10 -		30	2	S90-2-15-013			91215013	112/5	57	M14x1,5	T	17
	04.10 -		40	2	S90-2-20-003			91220003	112/5	57	M14x1,5	T	17
	04.10 -		40	7	S90-7-20-017			91720017	112/5	57	M14x1,5	T	17
	04.10 -		50	7	S90-7-25-005			91725005	112/5	57	M14x1,5	T	17
	04.10 -		60	7	S90-7-30-012			91730012	112/5	57	M14x1,5	T	17
LUPO (6X1, 6E1)													
	09.98 - 07.05	S1-6-12-50-24-17	10	1	S90-1-05-010		S11	91105010	100/4	57	M12x1,5	T	15
	09.98 - 07.05	M12x1,5x24, KU r=13	16	1	S90-1-08-003		S11	91108003	100/4	57	M12x1,5	T	15
	09.98 - 07.05		30	2	S90-2-15-004		S13	91215004	100/4	57	M12x1,5	T	15
	09.98 - 07.05		40	2	S90-2-20-011		S20	91220011	100/4	57	M12x1,5	T	15
	09.98 - 07.05		50	7	S90-7-25-001		S20	91725001	100/4	57	M12x1,5	T	15
MULTIVAN V (7HM, 7HN, 7HF, 7EF, 7EM, 7EN)													
	04.03 -	S4-7-14-50-35-19	10	1	S90-1-05-027		S19	91105027	120/5	65	M14x1,5	T	21
	04.03 -	M14x1,5x35, KU r=14	24	2	S90-2-12-001		S19	91212001	120/5	65	M14x1,5	T	21
	04.03 -		30	2	S90-2-15-034		S19	91215034	120/5	65	M14x1,5	T	21
	04.03 -		40	7	S90-7-20-013		S19, S28	91720013	120/5	65	M14x1,5	T	21
	04.03 -		50	7	S90-7-25-018		S19, S28	91725018	120/5	65	M14x1,5	T	21
NEW BEETLE (9C1, 1C1)													
	01.98 - 09.10	S1-6-14-50-27-17	10	1	S90-1-05-006		S11	91105006	100/5	57	M14x1,5	T	23
	01.98 - 09.10	M14x1,5x27, KU r=13	16	1	S90-1-08-001		S11	91108001	100/5	57	M14x1,5	T	23
	01.98 - 09.10		30	2	S90-2-15-005			91215005	100/5	57	M14x1,5	T	23
	01.98 - 09.10		40	2	S90-2-20-004			91220004	100/5	57	M14x1,5	T	23
	01.98 - 09.10		50	7	S90-7-25-003			91725003	100/5	57	M14x1,5	T	23
NEW BEETLE Cabriolet (1Y7)													
NEW BEETLE Convertible (1Y7)	09.02 - 10.10	S1-6-14-50-27-17	10	1	S90-1-05-006		S11	91105006	100/5	57	M14x1,5	T	23
	09.02 - 10.10	M14x1,5x27, KU r=13	16	1	S90-1-08-001		S11	91108001	100/5	57	M14x1,5	T	23
	09.02 - 10.10		30	2	S90-2-15-005			91215005	100/5	57	M14x1,5	T	23
	09.02 - 10.10		40	2	S90-2-20-004			91220004	100/5	57	M14x1,5	T	23
	09.02 - 10.10		50	7	S90-7-25-003			91725003	100/5	57	M14x1,5	T	23
PASSAT (3A2, 35I)													
	02.88 - 12.97	S1-6-12-50-24-17	10	1	S90-1-05-010		S11	91105010	100/4	57	M12x1,5	T	18
	02.88 - 12.97	M12x1,5x24, KU r=13	16	1	S90-1-08-003		S11	91108003	100/4	57	M12x1,5	T	18
	02.88 - 12.97		30	2	S90-2-15-004		S13	91215004	100/4	57	M12x1,5	T	18
	02.88 - 12.97		40	2	S90-2-20-011			91220011	100/4	57	M12x1,5	T	18
	02.88 - 12.97		50	7	S90-7-25-001			91725001	100/4	57	M12x1,5	T	18
PASSAT (3A2, 35I)													
	02.88 - 12.97	S1-6-14-50-27-17	10	1	S90-1-05-006		S11	91105006	100/5	57	M14x1,5	T	18
	02.88 - 12.97	M14x1,5x27, KU r=13	16	1	S90-1-08-001		S11	91108001	100/5	57	M14x1,5	T	18
	02.88 - 12.97		30	2	S90-2-15-005			91215005	100/5	57	M14x1,5	T	18
	02.88 - 12.97		40	2	S90-2-20-004			91220004	100/5	57	M14x1,5	T	18
	02.88 - 12.97		50	7	S90-7-25-003			91725003	100/5	57	M14x1,5	T	18
PASSAT (3B2)													
	08.96 - 12.01	S1-6-14-50-27-17	10	1	S90-1-05-016		S11	91105016	100/5	57	M14x1,5	T	30
	08.96 - 12.01	M14x1,5x27, KU r=13	16	1	S90-1-08-001		S11	91108001	100/5	57	M14x1,5	T	30
	08.96 - 12.01		30	2	S90-2-15-013			91215013	100/5	57	M14x1,5	T	30
	08.96 - 12.01		40	2	S90-2-20-003			91220003	100/5	57	M14x1,5	T	30
	08.96 - 12.01		50	7	S90-7-25-003			91725003	100/5	57	M14x1,5	§21	30
PASSAT (3B2)													
	08.96 - 12.01	S1-6-14-50-27-17	10	1	S90-1-05-016		S11	91105016	112/5	57	M14x1,5	T	30
	08.96 - 12.01	M14x1,5x27, KU r=13	16	1	S90-1-08-001		S11	91108001	112/5	57	M14x1,5	T	30
	08.96 - 12.01		30	2	S90-2-15-013			91215013	112/5	57	M14x1,5	T	30
	08.96 - 12.01		40	2	S90-2-20-003			91220003	112/5	57	M14x1,5	T	30
	08.96 - 12.01		50	7	S90-7-25-005			91725005	112/5	57	M14x1,5	T	30
PASSAT (3B3)													
	11.00 - 05.05	S1-6-14-50-27-17	10	1	S90-1-05-006		S11	91105006	100/5	57	M14x1,5	T	25
	11.00 - 05.05	M14x1,5x27, KU r=13	16	1	S90-1-08-001		S11	91108001	100/5	57	M14x1,5	T	25
	11.00 - 05.05		30	2	S90-2-15-005			91215005	100/5	57	M14x1,5	T	25
	11.00 - 05.05		40	2	S90-2-20-004			91220004	100/5	57	M14x1,5	T	25
	11.00 - 05.05		50	7	S90-7-25-003			91725003	100/5	57	M14x1,5	§21	25
PASSAT (3B3)													
	11.00 - 05.05	S1-6-14-50-27-17	10	1	S90-1-05-016		S11	91105016	112/5	57	M14x1,5	T	25
	11.00 - 05.05	M14x1,5x27, KU r=13	24	2	S90-2-12-003			91212003	112/5	57	M14x1,5	T	25
	11.00 - 05.05		30	2	S90-2-15-013			91215013	112/5	57	M14x1,5	T	25
	11.00 - 05.05		40	2	S90-2-20-003			91220003	112/5	57	M14x1,5	T	25
	11.00 - 05.05		50	7	S90-7-25-005			91725005	112/5	57	M14x1,5	T	25
PASSAT (3C2)													
	03.05 -	S1-6-14-50-27-17	10	1	S90-1-05-016		S11	91105016	112/5	57	M14x1,5	T	12
	03.05 -	M14x1,5x27, KU r=13	24	2	S90-2-12-003		S63	91212003	112/5	57	M14x1,5	T	12
	03.05 -		30	2	S90-2-15-013			91215013	112/5	57	M14x1,5	T	12
	03.05 -		40	2	S90-2-20-003			91220003	112/5	57	M14x1,5	T	12
	03.05 -		40	7	S90-7-20-017			91720017	112/5	57	M14x1,5	T	12
	03.05 -		50	7	S90-7-25-005			91725005	112/5	57	M14x1,5	T	12
	03.05 -		60	7	S90-7-30-012			91730012	112/5	57	M14x1,5	T	12

Modell | *Model*	Baujahr | *Year*	Original-radschraube (nicht bestellbar) | *Original Bolt (not available)*	Spurweiten-änd. Achse | *Total track widening* (mm)	Eibach System	Artikel-Nr. silber | *Part-No. silver*	Artikel-Nr. schwarz | *Part-No. black*	Hinweise | *Notes*	Kennzeichnung | *Stamping*	Lochkreis | - Anzahl | *Bolt pattern* | *No. of holes*	Zentrierung | *Centre bore* (mm)	Gewinde | *Thread*	Gutachten | *Homologation*	ET-Grenze | *Offset frontier*
VOLKSWAGEN													
PASSAT (3G2)													
	08.14 -	S1-6-14-50-27-17	20	2	S90-2-10-027		S74	91210027	112/5	57	M14x1,5	T	12
	08.14 -	M14x1,5x27, KU r=13	24	2	S90-2-12-003		S63	91212003	112/5	57	M14x1,5	T	12
	08.14 -		30	2	S90-2-15-013			91215013	112/5	57	M14x1,5	T	12
	08.14 -		40	2	S90-2-20-003			91220003	112/5	57	M14x1,5	T	12
	08.14 -		40	7	S90-7-20-017			91720017	112/5	57	M14x1,5	T	12
	08.14 -		50	7	S90-7-25-005			91725005	112/5	57	M14x1,5	T	12
	08.14 -		60	7	S90-7-30-012			91730012	112/5	57	M14x1,5	T	12
PASSAT (362)													
	08.10 - 12.14	S1-6-14-50-27-17	10	1	S90-1-05-016		S11	91105016	112/5	57	M14x1,5	T	12
	08.10 - 12.14	M14x1,5x27, KU r=13	24	2	S90-2-12-003		S63	91212003	112/5	57	M14x1,5	T	12
	08.10 - 12.14		30	2	S90-2-15-013			91215013	112/5	57	M14x1,5	T	12
	08.10 - 12.14		40	2	S90-2-20-003			91220003	112/5	57	M14x1,5	T	12
	08.10 - 12.14		40	7	S90-7-20-017			91720017	112/5	57	M14x1,5	T	12
	08.10 - 12.14		50	7	S90-7-25-005			91725005	112/5	57	M14x1,5	T	12
	08.10 - 12.14		60	7	S90-7-30-012			91730012	112/5	57	M14x1,5	T	12
PASSAT ALLTRACK (365)													
	01.12 -	S1-6-14-50-27-17	10	1	S90-1-05-016		S11	91105016	112/5	57	M14x1,5	T	12
	01.12 -	M14x1,5x27, KU r=13	24	2	S90-2-12-003		S63	91212003	112/5	57	M14x1,5	T	12
	01.12 -		30	2	S90-2-15-013			91215013	112/5	57	M14x1,5	T	12
	01.12 -		40	2	S90-2-20-003			91220003	112/5	57	M14x1,5	T	12
	01.12 -		40	7	S90-7-20-017			91720017	112/5	57	M14x1,5	T	12
	01.12 -		50	7	S90-7-25-005			91725005	112/5	57	M14x1,5	T	12
	01.12 -		60	7	S90-7-30-012			91730012	112/5	57	M14x1,5	T	12
PASSAT CC (357)													
	05.08 -	S1-6-14-50-27-17	10	1	S90-1-05-016		S11	91105016	112/5	57	M14x1,5	T	14
	05.08 -	M14x1,5x27, KU r=13	24	2	S90-2-12-003		S63	91212003	112/5	57	M14x1,5	T	14
	05.08 -		30	2	S90-2-15-013			91215013	112/5	57	M14x1,5	T	14
	05.08 -		40	2	S90-2-20-003			91220003	112/5	57	M14x1,5	T	14
	05.08 -		40	7	S90-7-20-017			91720017	112/5	57	M14x1,5	T	14
	05.08 -		50	7	S90-7-25-005			91725005	112/5	57	M14x1,5	T	14
	05.08 -		60	7	S90-7-30-012			91730012	112/5	57	M14x1,5	T	14
PASSAT Variant (3A5, 35I)													
PASSAT Station Wagon	02.88 - 06.97	S1-6-12-50-24-17	10	1	S90-1-05-010		S11	91105010	100/4	57	M12x1,5	T	18
(3A5, 35I)	02.88 - 06.97	M12x1,5x24, KU r=13	16	1	S90-1-08-003		S11	91108003	100/4	57	M12x1,5	T	18
	02.88 - 06.97		30	2	S90-2-15-004		S13	91215004	100/4	57	M12x1,5	T	18
	02.88 - 06.97		40	2	S90-2-20-011			91220011	100/4	57	M12x1,5	T	18
	02.88 - 06.97		50	7	S90-7-25-001			91725001	100/4	57	M12x1,5	T	18
PASSAT Variant (3A5, 35I)													
PASSAT Station Wagon	02.88 - 06.97	S1-6-14-50-27-17	10	1	S90-1-05-006		S11	91105006	100/5	57	M14x1,5	T	18
(3A5, 35I)	02.88 - 06.97	M14x1,5x27, KU r=13	16	1	S90-1-08-001		S11	91108001	100/5	57	M14x1,5	T	18
	02.88 - 06.97		30	2	S90-2-15-005			91215005	100/5	57	M14x1,5	T	18
	02.88 - 06.97		40	2	S90-2-20-004			91220004	100/5	57	M14x1,5	T	18
	02.88 - 06.97		50	7	S90-7-25-003			91725003	100/5	57	M14x1,5	T	18
PASSAT Variant (3B5)													
	05.97 - 12.01	S1-6-14-50-27-17	10	1	S90-1-05-016		S11	91105016	100/5	57	M14x1,5	T	30
	05.97 - 12.01	M14x1,5x27, KU r=13	16	1	S90-1-08-001		S11	91108001	100/5	57	M14x1,5	T	30
	05.97 - 12.01		30	2	S90-2-15-013			91215013	100/5	57	M14x1,5	T	30
	05.97 - 12.01		40	2	S90-2-20-003			91220003	100/5	57	M14x1,5	T	30
	05.97 - 12.01		50	7	S90-7-25-003			91725003	100/5	57	M14x1,5	§21	30
PASSAT Variant (3B5)													
	05.97 - 12.01	S1-6-14-50-27-17	10	1	S90-1-05-016		S11	91105016	112/5	57	M14x1,5	T	30
	05.97 - 12.01	M14x1,5x27, KU r=13	16	1	S90-1-08-001		S11	91108001	112/5	57	M14x1,5	T	30
	05.97 - 12.01		30	2	S90-2-15-013			91215013	112/5	57	M14x1,5	T	30
	05.97 - 12.01		40	2	S90-2-20-003			91220003	112/5	57	M14x1,5	T	30
	05.97 - 12.01		50	7	S90-7-25-005			91725005	112/5	57	M14x1,5	T	30
PASSAT Variant (3B6)													
	11.00 - 08.05	S1-6-14-50-27-17	10	1	S90-1-05-016		S11	91105016	112/5	57	M14x1,5	T	25
	11.00 - 08.05	M14x1,5x27, KU r=13	24	2	S90-2-12-003			91212003	112/5	57	M14x1,5	T	25
	11.00 - 08.05		30	2	S90-2-15-013			91215013	112/5	57	M14x1,5	T	25
	11.00 - 08.05		40	2	S90-2-20-003			91220003	112/5	57	M14x1,5	T	25
	11.00 - 08.05		50	7	S90-7-25-005			91725005	112/5	57	M14x1,5	T	25
PASSAT Variant (3C5)													
	08.05 -	S1-6-14-50-27-17	10	1	S90-1-05-016		S11	91105016	112/5	57	M14x1,5	T	12
	08.05 -	M14x1,5x27, KU r=13	24	2	S90-2-12-003		S63	91212003	112/5	57	M14x1,5	T	12
	08.05 -		30	2	S90-2-15-013			91215013	112/5	57	M14x1,5	T	12
	08.05 -		40	2	S90-2-20-003			91220003	112/5	57	M14x1,5	T	12
	08.05 -		40	7	S90-7-20-017			91720017	112/5	57	M14x1,5	T	12
	08.05 -		50	7	S90-7-25-005			91725005	112/5	57	M14x1,5	T	12
	08.05 -		60	7	S90-7-30-012			91730012	112/5	57	M14x1,5	T	12
PASSAT Variant (3G5)													
	08.14 -	S1-6-14-50-27-17	20	2	S90-2-10-027		S74	91210027	112/5	57	M14x1,5	T	12
	08.14 -	M14x1,5x27, KU r=13	24	2	S90-2-12-003		S63	91212003	112/5	57	M14x1,5	T	12
	08.14 -		30	2	S90-2-15-013			91215013	112/5	57	M14x1,5	T	12
	08.14 -		40	2	S90-2-20-003			91220003	112/5	57	M14x1,5	T	12
	08.14 -		40	7	S90-7-20-017			91720017	112/5	57	M14x1,5	T	12
	08.14 -		50	7	S90-7-25-005			91725005	112/5	57	M14x1,5	T	12
	08.14 -		60	7	S90-7-30-012			91730012	112/5	57	M14x1,5	T	12
PASSAT Variant (365)													
	08.10 - 12.14	S1-6-14-50-27-17	10	1	S90-1-05-016		S11	91105016	112/5	57	M14x1,5	T	12
	08.10 - 12.14	M14x1,5x27, KU r=13	24	2	S90-2-12-003		S63	91212003	112/5	57	M14x1,5	T	12
	08.10 - 12.14		30	2	S90-2-15-013			91215013	112/5	57	M14x1,5	T	12
	08.10 - 12.14		40	2	S90-2-20-003			91220003	112/5	57	M14x1,5	T	12
	08.10 - 12.14		40	7	S90-7-20-017			91720017	112/5	57	M14x1,5	T	12
	08.10 - 12.14		50	7	S90-7-25-005			91725005	112/5	57	M14x1,5	T	12
	08.10 - 12.14		60	7	S90-7-30-012			91730012	112/5	57	M14x1,5	T	12
PHAETON (3D_)													
	04.02 -	S1-6-14-50-27-17	10	1	S90-1-05-016		S11	91105016	112/5	57	M14x1,5	T	25
	04.02 -	M14x1,5x27, KU r=13	30	2	S90-2-15-013			91215013	112/5	57	M14x1,5	T	25
	04.02 -		40	2	S90-2-20-003			91220003	112/5	57	M14x1,5	T	25
	04.02 -		50	7	S90-7-25-005			91725005	112/5	57	M14x1,5	T	25
POLO (6N1)													
	10.94 - 10.99	S1-6-12-50-24-17	10	1	S90-1-05-010		S11	91105010	100/4	57	M12x1,5	T	5
	10.94 - 10.99	M12x1,5x24, KU r=13	16	1	S90-1-08-003		S11	91108003	100/4	57	M12x1,5	T	5
	10.94 - 10.99		30	2	S90-2-15-004		S13	91215004	100/4	57	M12x1,5	T	5
	10.94 - 10.99		40	2	S90-2-20-011			91220011	100/4	57	M12x1,5	T	5
	10.94 - 10.99		50	7	S90-7-25-001			91725001	100/4	57	M12x1,5	T	5

Modell | *Model*	Baujahr | *Year*	Original-radschraube (nicht bestellbar) | *Original Bolt (not available)*	Spurweiten-änd. Achse | *Total track widening* (mm)	Eibach System	Artikel-Nr. silber | *Part-No. silver*	Artikel-Nr. schwarz | *Part-No. black*	Hinweise | *Notes*	Kennzeichnung | *Stamping*	Lochkreis | - Anzahl | *Bolt pattern* | *No. of holes*	Zentrierung | *Centre bore* (mm)	Gewinde | *Thread*	Gutachten | *Homologation*	ET-Grenze | *Offset frontier*
VOLKSWAGEN													
POLO (6N2)													
	10.99 - 10.01	S1-6-12-50-24-17	10	1	S90-1-05-010		S11	91105010	100/4	57	M12x1,5	T	5
	10.99 - 10.01	M12x1,5x24, KU r=13	16	1	S90-1-08-003		S11	91108003	100/4	57	M12x1,5	T	5
	10.99 - 10.01		30	2	S90-2-15-004		S13	91215004	100/4	57	M12x1,5	T	5
	10.99 - 10.01		40	2	S90-2-20-011			91220011	100/4	57	M12x1,5	T	5
	10.99 - 10.01		50	7	S90-7-25-001			91725001	100/4	57	M12x1,5	T	5
POLO (9N_)													
	10.01 - 01.12	S1-6-14-50-27-17	10	1	S90-1-05-006		S11	91105006	100/5	57	M14x1,5	T	20
	10.01 - 01.12	M14x1,5x27, KU r=13	16	1	S90-1-08-001		S11	91108001	100/5	57	M14x1,5	T	20
	10.01 - 01.12		30	2	S90-2-15-005			91215005	100/5	57	M14x1,5	T	20
	10.01 - 01.12		40	2	S90-2-20-004			91220004	100/5	57	M14x1,5	T	20
	10.01 - 01.12		50	7	S90-7-25-003			91725003	100/5	57	M14x1,5	T	20
POLO (6R, 6C)													
	06.09 -	S1-6-14-50-27-17	24	2	S90-2-12-013			91212013	100/5	57	M14x1,5	T	8
	06.09 -	M14x1,5x27, KU r=13	30	2	S90-2-15-005			91215005	100/5	57	M14x1,5	T	8
	06.09 -		40	2	S90-2-20-004			91220004	100/5	57	M14x1,5	T	8
	06.09 -		40	7	S90-7-20-028			91720028	100/5	57	M14x1,5	T	8
	06.09 -		50	7	S90-7-25-003			91725003	100/5	57	M14x1,5	T	8
POLO CLASSIC (6KV2)													
	11.95 - 07.06	S1-6-12-50-24-17	10	1	S90-1-05-010		S11	91105010	100/4	57	M12x1,5	§21	
	11.95 - 07.06	M12x1,5x24, KU r=13	16	1	S90-1-08-003		S11	91108003	100/4	57	M12x1,5	§21	
	11.95 - 07.06		30	2	S90-2-15-004		S13	91215004	100/4	57	M12x1,5	§21	
	11.95 - 07.06		40	2	S90-2-20-011			91220011	100/4	57	M12x1,5	§21	
	11.95 - 07.06		50	7	S90-7-25-001			91725001	100/4	57	M12x1,5	§21	
POLO Kasten (6NF)													
POLO Box (6NF)	09.94 - 12.99	S1-6-12-50-24-17	10	1	S90-1-05-010		S11	91105010	100/4	57	M12x1,5	T	5
	09.94 - 12.99	M12x1,5x24, KU r=13	16	1	S90-1-08-003		S11	91108003	100/4	57	M12x1,5	T	5
	09.94 - 12.99		30	2	S90-2-15-004		S13	91215004	100/4	57	M12x1,5	T	5
	09.94 - 12.99		40	2	S90-2-20-011			91220011	100/4	57	M12x1,5	T	5
	09.94 - 12.99		50	7	S90-7-25-001			91725001	100/4	57	M12x1,5	T	5
POLO Stufenheck (9A4)													
POLO Saloon (9A4)	09.02 -	S1-6-14-50-27-17	10	1	S90-1-05-006		S11	91105006	100/5	57	M14x1,5	T	20
	09.02 -	M14x1,5x27, KU r=13	16	1	S90-1-08-001		S11	91108001	100/5	57	M14x1,5	T	20
	09.02 -		30	2	S90-2-15-005			91215005	100/5	57	M14x1,5	T	20
	09.02 -		40	2	S90-2-20-004			91220004	100/5	57	M14x1,5	T	20
	09.02 -		50	7	S90-7-25-003			91725003	100/5	57	M14x1,5	T	20
POLO Stufenheck													
POLO Saloon	05.09 -	S1-6-14-50-27-17	24	2	S90-2-12-013		S3	91212013	100/5	57	M14x1,5	T	8
	05.09 -	M14x1,5x27, KU r=13	30	2	S90-2-15-005			91215005	100/5	57	M14x1,5	T	8
	05.09 -		40	2	S90-2-20-004			91220004	100/5	57	M14x1,5	T	8
	05.09 -		40	7	S90-7-20-028			91720028	100/5	57	M14x1,5	T	8
	05.09 -		50	7	S90-7-25-003			91725003	100/5	57	M14x1,5	T	8
POLO Variant (6KV5)													
	04.97 - 09.01	S1-6-12-50-24-17	10	1	S90-1-05-010		S11	91105010	100/4	57	M12x1,5	§21	
	04.97 - 09.01	M12x1,5x24, KU r=13	16	1	S90-1-08-003		S11	91108003	100/4	57	M12x1,5	§21	
	04.97 - 09.01		30	2	S90-2-15-004		S13	91215004	100/4	57	M12x1,5	§21	
	04.97 - 09.01		40	2	S90-2-20-011			91220011	100/4	57	M12x1,5	§21	
	04.97 - 09.01		50	7	S90-7-25-001			91725001	100/4	57	M12x1,5	§21	
SCIROCCO (137)													
	05.08 -	S1-6-14-50-27-17	24	2	S90-2-12-003			91212003	112/5	57	M14x1,5	T	11
	05.08 -	M14x1,5x27, KU r=13	30	2	S90-2-15-013			91215013	112/5	57	M14x1,5	T	11
	05.08 -		40	2	S90-2-20-003			91220003	112/5	57	M14x1,5	T	11
	05.08 -		40	7	S90-7-20-017			91720017	112/5	57	M14x1,5	T	11
	05.08 -		50	7	S90-7-25-005			91725005	112/5	57	M14x1,5	T	11
	05.08 -		60	7	S90-7-30-012			91730012	112/5	57	M14x1,5	T	11
SHARAN (7M8, 7M9, 7M6)													
	05.95 - 03.10	S4-7-14-50-37-19	10	1	S90-1-05-016		S11	91105016	112/5	57	M14x1,5	T	30
	05.95 - 03.10	M14x1,5x37, KU r=14	30	2	S90-2-15-013			91215013	112/5	57	M14x1,5	T	30
	05.95 - 03.10		40	2	S90-2-20-003			91220003	112/5	57	M14x1,5	T	30
	05.95 - 03.10		50	7	S90-7-25-028			91725005	112/5	57	M14x1,5	T	30
SHARAN (7N)													
	05.10 -	S1-6-14-50-27-17	24	2	S90-2-12-003		S63	91212003	112/5	57	M14x1,5	T	5
	05.10 -	M14x1,5x27, KU r=13	30	2	S90-2-15-013			91215013	112/5	57	M14x1,5	T	5
	05.10 -		40	2	S90-2-20-003			91220003	112/5	57	M14x1,5	T	5
	05.10 -		40	7	S90-7-20-017			91720017	112/5	57	M14x1,5	T	5
	05.10 -		50	7	S90-7-25-005			91725005	112/5	57	M14x1,5	T	5
	05.10 -		60	7	S90-7-30-012			91730012	112/5	57	M14x1,5	T	5
TIGUAN (5N_)													
	09.07 -	S1-6-14-50-27-17	24	2	S90-2-12-003			91212003	112/5	57	M14x1,5	T	3
	09.07 -	M14x1,5x27, KU r=13	30	2	S90-2-15-013			91215013	112/5	57	M14x1,5	T	3
	09.07 -		40	2	S90-2-20-003			91220003	112/5	57	M14x1,5	T	3
	09.07 -		40	7	S90-7-20-017			91720017	112/5	57	M14x1,5	T	3
	09.07 -		50	7	S90-7-25-005			91725005	112/5	57	M14x1,5	T	3
	09.07 -		60	7	S90-7-30-012			91730012	112/5	57	M14x1,5	T	3
TOUAREG (7LA, 7L6, 7L7)													
	10.02 - 05.10	S4-7-14-50-35-19	10	1	S90-1-05-027			91105027	120/5	65	M14x1,5	T	21
	10.02 - 05.10	M14x1,5x35, KU r=14	24	2	S90-2-12-001			91212001	120/5	65	M14x1,5	T	21
	10.02 - 05.10		30	2	S90-2-15-034			91215034	120/5	65	M14x1,5	T	21
	10.02 - 05.10		40	7	S90-7-20-013		S28	91720013	120/5	65	M14x1,5	T	21
	10.02 - 05.10		50	7	S90-7-25-018		S28	91725018	120/5	65	M14x1,5	T	21
TOUAREG (7LA, 7L6, 7L7)													
	10.02 - 05.10	S4-7-14-50-35-19	14	2	S90-2-07-001		S2	91207001	130/5	71,5	M14x1,5	T	30
	10.02 - 05.10	M14x1,5x35, KU r=14	30	2	S90-2-15-018		S2	91215018	130/5	71,5	M14x1,5	T	30
	10.02 - 05.10		36	2	S90-2-18-001		S2	91218001	130/5	71,5	M14x1,5	T	30
	10.02 - 05.10		46	2	S90-2-23-001		S2	91223001	130/5	71,5	M14x1,5	T	30
TOUAREG (7P5)													
	01.10 -	S4-7-14-50-36-19	14	2	S90-2-07-001			91207001	130/5	71,5	M14x1,5	T	25
	01.10 -	M14x1,5x36, KU r=14	30	2	S90-2-15-018			91215018	130/5	71,5	M14x1,5	T	25
	01.10 -		36	2	S90-2-18-001			91218001	130/5	71,5	M14x1,5	T	25
	01.10 -		36	7	S90-7-18-002		S46	91718001	130/5	71,5	M14x1,5	T	25
	01.10 -		42	7	S90-7-21-007		S46	91721001	130/5	71,5	M14x1,5	T	25
	01.10 -		46	2	S90-2-23-001			91223001	130/5	71,5	M14x1,5	T	25
	01.10 -		46	7	S90-7-23-002		S46	91723001	130/5	71,5	M14x1,5	T	25
	01.10 -		50	7	S90-7-25-050		S46	91725050	130/5	71,5	M14x1,5	T	25

Modell | *Model*	Baujahr | *Year*	Original-radschraube (nicht bestellbar) | *Original Bolt (not available)*	Spurweiten-änd. Achse | *Total track widening* (mm)	Eibach System	Artikel-Nr. silber | *Part-No. silver*	Artikel-Nr. schwarz | *Part-No. black*	Hinweise | *Notes*	Kennzeichnung | *Stamping*	Lochkreis | - Anzahl | *Bolt pattern* | *No. of holes*	Zentrierung | *Centre bore* (mm)	Gewinde | *Thread*	Gutachten | *Homologation*	ET-Grenze | *Offset frontier*
VOLKSWAGEN													
TOURAN (1T1, 1T2)													
	02.03 - 05.10	S1-6-14-50-27-17	10	1	S90-1-05-016		S6, S11	91105016	112/5	57	M14x1,5	T	17
	02.03 - 05.10	M14x1,5x27, KU r=13	24	2	S90-2-12-003		S63	91212003	112/5	57	M14x1,5	T	17
	02.03 - 05.10		30	2	S90-2-15-013			91215013	112/5	57	M14x1,5	T	17
	02.03 - 05.10		40	2	S90-2-20-003			91220003	112/5	57	M14x1,5	T	17
	02.03 - 05.10		40	7	S90-7-20-017			91720017	112/5	57	M14x1,5	T	17
	02.03 - 05.10		50	7	S90-7-25-005			91725005	112/5	57	M14x1,5	T	17
	02.03 - 05.10		60	7	S90-7-30-012			91730012	112/5	57	M14x1,5	T	17
TOURAN (1T3)													
	05.10 -	S1-6-14-50-27-17	10	1	S90-1-05-016		S6, S11	91105016	112/5	57	M14x1,5	T	17
	05.10 -	M14x1,5x27, KU r=13	24	2	S90-2-12-003		S63	91212003	112/5	57	M14x1,5	T	17
	05.10 -		30	2	S90-2-15-013			91215013	112/5	57	M14x1,5	T	17
	05.10 -		40	2	S90-2-20-003			91220003	112/5	57	M14x1,5	T	17
	05.10 -		40	7	S90-7-20-017			91720017	112/5	57	M14x1,5	T	17
	05.10 -		50	7	S90-7-25-005			91725005	112/5	57	M14x1,5	T	17
	05.10 -		60	7	S90-7-30-012			91730012	112/5	57	M14x1,5	T	17
TOURAN													
	09.15 -	S1-6-14-50-27-17	20	2	S90-2-10-027		S74	91210027	112/5	57	M14x1,5		
	09.15 -	M14x1,5x27, KU r=13	24	2	S90-2-12-003			91212003	112/5	57	M14x1,5		
	09.15 -		30	2	S90-2-15-013			91215013	112/5	57	M14x1,5		
	09.15 -		40	2	S90-2-20-003			91220003	112/5	57	M14x1,5		
	09.15 -		40	7	S90-7-20-017			91720017	112/5	57	M14x1,5		
	09.15 -		50	7	S90-7-25-005			91725005	112/5	57	M14x1,5		
	09.15 -		60	7	S90-7-30-012			91730012	112/5	57	M14x1,5		
TRANSPORTER IV Bus (70XB, 70XC, 7DB, 7DW)	09.90 - 04.03	S4-7-14-50-35-19	10	1	S90-1-05-016		S11	91105016	112/5	57	M14x1,5	T	25
	09.90 - 04.03	M14x1,5x35, KU r=14	30	2	S90-2-15-013		S19	91215013	112/5	57	M14x1,5	T	25
	09.90 - 04.03		40	2	S90-2-20-003		S19	91220003	112/5	57	M14x1,5	T	25
	09.90 - 04.03		50	7	S90-7-25-005		S19, S28	91725005	112/5	57	M14x1,5	T	25
TRANSPORTER IV Kasten (70XA)													
TRANSPORTER IV Box (70XA)	07.90 - 04.03	S4-7-14-50-35-19	10	1	S90-1-05-016		S11	91105016	112/5	57	M14x1,5	T	25
	07.90 - 04.03	M14x1,5x35, KU r=14	30	2	S90-2-15-013		S19	91215013	112/5	57	M14x1,5	T	25
	07.90 - 04.03		40	2	S90-2-20-003		S19	91220003	112/5	57	M14x1,5	T	25
	07.90 - 04.03		50	7	S90-7-25-005		S19, S28	91725005	112/5	57	M14x1,5	T	25
TRANSPORTER IV Pritsche/ Fahrgestell (70XD)													
TRANSPORTER IV Platform/ Chassis (70XD)	07.90 - 04.03	S4-7-14-50-35-19	10	1	S90-1-05-016		S11	91105016	112/5	57	M14x1,5	T	25
	07.90 - 04.03	M14x1,5x35, KU r=14	30	2	S90-2-15-013		S19	91215013	112/5	57	M14x1,5	T	25
	07.90 - 04.03		40	2	S90-2-20-003		S19	91220003	112/5	57	M14x1,5	T	25
	07.90 - 04.03		50	7	S90-7-25-005		S19, S28	91725005	112/5	57	M14x1,5	T	25
TRANSPORTER V Bus (7HB, 7HJ, 7EB, 7EJ, 7EF)	04.03 -	S4-7-14-50-35-19	10	1	S90-1-05-027		S19	91105027	120/5	65	M14x1,5	T	21
	04.03 -	M14x1,5x35, KU r=14	24	2	S90-2-12-001		S19	91212001	120/5	65	M14x1,5	T	21
	04.03 -		30	2	S90-2-15-034		S19	91215034	120/5	65	M14x1,5	T	21
	04.03 -		40	7	S90-7-20-013		S19, S28	91720013	120/5	65	M14x1,5	T	21
	04.03 -		50	7	S90-7-25-018		S19, S28	91725018	120/5	65	M14x1,5	T	21
TRANSPORTER V Kasten (7HA, 7HH, 7EA, 7EH)													
TRANSPORTER V Box (7HA, 7HH, 7EA, 7EH)	04.03 -	S4-7-14-50-35-19	10	1	S90-1-05-027		S19	91105027	120/5	65	M14x1,5	T	21
	04.03 -	M14x1,5x35, KU r=14	24	2	S90-2-12-001		S19	91212001	120/5	65	M14x1,5	T	21
	04.03 -		30	2	S90-2-15-034		S19	91215034	120/5	65	M14x1,5	T	21
	04.03 -		40	7	S90-7-20-013		S19, S28	91720013	120/5	65	M14x1,5	T	21
	04.03 -		50	7	S90-7-25-018		S19, S28	91725018	120/5	65	M14x1,5	T	21
TRANSPORTER V Pritsche/ Fahrgestell (7JD, 7JE, 7JL, 7JY, 7JZ, 7FD, 7FE, 7FL, 7FY, 7FZ)													
TRANSPORTER V Platform/ Chassis (7JD, 7JE, 7JL, 7JY, 7JZ, 7FD, 7FE, 7FL, 7FY, 7FZ)	04.03 -	S4-7-14-50-35-19	10	1	S90-1-05-027		S19	91105027	120/5	65	M14x1,5	T	21
	04.03 -	M14x1,5x35, KU r=14	24	2	S90-2-12-001		S19	91212001	120/5	65	M14x1,5	T	21
	04.03 -		30	2	S90-2-15-034		S19	91215034	120/5	65	M14x1,5	T	21
	04.03 -		40	7	S90-7-20-013		S19, S28	91720013	120/5	65	M14x1,5	T	21
	04.03 -		50	7	S90-7-25-018		S19, S28	91725018	120/5	65	M14x1,5	T	21
UP													
	08.11 -	S1-6-12-50-27-17	24	2	S90-2-12-019		S3	91212019	100/4	57	M12x1,5	T	10
	08.11 -	M12x1,5x27, KU r=13	30	2	S90-2-15-004		S13	91215004	100/4	57	M12x1,5	T	10
	08.11 -		40	2	S90-2-20-011			91220011	100/4	57	M12x1,5	T	10
	08.11 -		50	7	S90-7-25-001			91725001	100/4	57	M12x1,5	T	10
VENTO (1H2)													
	11.91 - 09.98	S1-6-12-50-27-17	10	1	S90-1-05-010		S11	91105010	100/4	57	M12x1,5	T	10
	11.91 - 09.98	M12x1,5x27, KU r=13	16	1	S90-1-08-003		S11	91108003	100/4	57	M12x1,5	T	10
	11.91 - 09.98		30	2	S90-2-15-004		S13	91215004	100/4	57	M12x1,5	T	10
	11.91 - 09.98		40	2	S90-2-20-011			91220011	100/4	57	M12x1,5	T	10
	11.91 - 09.98		50	7	S90-7-25-001			91725001	100/4	57	M12x1,5	T	10
VENTO (1H2)													
	11.91 - 09.98	S1-6-14-50-27-17	10	1	S90-1-05-006		S11	91105006	100/5	57	M14x1,5	T	10
	11.91 - 09.98	M14x1,5x27, KU r=13	16	1	S90-1-08-001		S11	91108001	100/5	57	M14x1,5	T	10
	11.91 - 09.98		30	2	S90-2-15-005			91215005	100/5	57	M14x1,5	T	10
	11.91 - 09.98		40	2	S90-2-20-004			91220004	100/5	57	M14x1,5	T	10
	11.91 - 09.98		50	7	S90-7-25-003			91725003	100/5	57	M14x1,5	T	10
VOLVO													
C30													
	12.06 - 12.12		30	4	S90-4-15-005		S9	91415005	108/5	63,3	M12x1,5	§21	
	12.06 - 12.12		40	4	S90-4-20-008		S9	91420008	108/5	63,3	M12x1,5	§21	
	12.06 - 12.12		50	4	S90-4-25-022		S9	91425022	108/5	63,3	M12x1,5	§21	
	12.06 - 12.12		60	4	S90-4-30-024		S9	91430024	108/5	63,3	M12x1,5	§21	
	12.06 - 12.12		70	4	S90-4-35-007		S9	91435007	108/5	63,3	M12x1,5	§21	
C70 I Cabriolet													
C70 I Convertible	01.98 - 10.05	S1-1-12-75-29-19	10	1	S90-1-05-020		S21	91105020	108/5	65	M12x1,75	T	28
	01.98 - 10.05	M12x1,75x29, KG60°	20	2	S90-2-10-012		S10, S21	91210012	108/5	65	M12x1,75	T	28
	01.98 - 10.05		30	2	S90-2-15-016		S21	91215016	108/5	65	M12x1,75	T	28
C70 I Coupe													
	03.97 - 09.02	S1-1-12-75-29-19	10	1	S90-1-05-020		S21	91105020	108/5	65	M12x1,75	T	28
	03.97 - 09.02	M12x1,75x29, KG60°	20	2	S90-2-10-012		S10, S21	91210012	108/5	65	M12x1,75	T	28
	03.97 - 09.02		30	2	S90-2-15-016		S21	91215016	108/5	65	M12x1,75	T	28

Modell | *Model*	Baujahr | *Year*	Originalradschraube (nicht bestellbar) | *Original Bolt (not available)*	Spurweiten-änd. Achse | *Total track widening* (mm)	Eibach System	Artikel-Nr. silber | *Part-No. silver*	Artikel-Nr. schwarz | *Part-No. black*	Hinweise | *Notes*	Kennzeichnung | *Stamping*	Lochkreis | - Anzahl | *Bolt pattern* | *No. of holes*	Zentrierung | *Centre bore* (mm)	Gewinde | *Thread*	Gutachten | *Homologation*	ET-Grenze | *Offset frontier*
VOLVO													
C70 II Cabriolet													
C70 II Convertible	03.06 -		30	4	S90-4-15-005		S9	91415005	108/5	63,3	M12x1,5	T	25
	03.06 -		40	4	S90-4-20-008		S9	91420008	108/5	63,3	M12x1,5	T	25
	03.06 -		50	4	S90-4-25-022		S9	91425022	108/5	63,3	M12x1,5	T	25
	03.06 -		60	4	S90-4-30-024		S9	91430024	108/5	63,3	M12x1,5	T	25
	03.06 -		70	4	S90-4-35-007		S9	91435007	108/5	63,3	M12x1,5	T	25
S40 II (MS)													
	01.04 -		30	4	S90-4-15-005		S9	91415005	108/5	63,3	M12x1,5	T	27,5
	01.04 -		40	4	S90-4-20-008		S9	91420008	108/5	63,3	M12x1,5	T	27,5
	01.04 -		50	4	S90-4-25-022		S9	91425022	108/5	63,3	M12x1,5	T	27,5
S60 I													
	07.00 - 04.10	S1-1-14-50-33-19	10	1	S90-1-05-020		S12	91105020	108/5	65	M14x1,5	T	28
	07.00 - 04.10	M14x1,5x33, KG60°	20	2	S90-2-10-012		S21	91210012	108/5	65	M14x1,5	T	28
	07.00 - 04.10		30	2	S90-2-15-016		S21	91215016	108/5	65	M14x1,5	T	28
S60 II													
	04.10 -	S1-1-14-50-33-19	20	2	S90-2-10-022			91610014	108/5	63,3	M14x1,5	T	35
	04.10 -	M14x1,5x33, KG60°	30	2	S90-2-15-048			91615011	108/5	63,3	M14x1,5	T	35
S70 (LS)													
	11.96 - 11.00	S1-1-12-75-29-19	10	1	S90-1-05-012		S21	91105012	108/4	65	M12x1,75	§21	
	11.96 - 11.00	M12x1,75x29, KG60°	30	2	S90-2-15-008		S21	91215008	108/4	65	M12x1,75	§21	
S70 (LS)													
	11.96 - 11.00	S1-1-12-75-29-19	10	1	S90-1-05-020		S21	91105020	108/5	65	M12x1,75	T	28
	11.96 - 11.00	M12x1,75x29, KG60°	20	2	S90-2-10-012		S21	91210012	108/5	65	M12x1,75	T	28
	11.96 - 11.00		30	2	S90-2-15-016		S21	91215016	108/5	65	M12x1,75	T	28
S80 I (TS, XY)													
	05.98 - 07.06	S1-1-14-50-33-19	10	1	S90-1-05-020		S21	91105020	108/5	65	M14x1,5	T	19
	05.98 - 07.06	M14x1,5x33, KG60°	20	2	S90-2-10-012		S21	91210012	108/5	65	M14x1,5	T	19
	05.98 - 07.06		30	2	S90-2-15-016		S21	91215016	108/5	65	M14x1,5	T	19
S80 II (AS)													
	03.06 -	S1-1-14-50-33-19	20	2	S90-2-10-022			91610014	108/5	63,3	M14x1,5	§21	
	03.06 -	M14x1,5x33, KG60°	30	2	S90-2-15-048			91615011	108/5	63,3	M14x1,5	§21	
S90													
	11.96 - 12.98	S1-1-12-75-29-19	10	1	S90-1-05-020		S21	91105020	108/5	65	M12x1,75	§21	
	11.96 - 12.98	M12x1,75x29, KG60°	20	2	S90-2-10-012		S21	91210012	108/5	65	M12x1,75	§21	
	11.96 - 12.98		30	2	S90-2-15-016		S21	91215016	108/5	65	M12x1,75	§21	
V40 Schrägheck													
V40 Hatchback	03.12 -		30	4	S90-4-15-005		S9	91415005	108/5	63,3	M12x1,5	T	30
	03.12 -		40	4	S90-4-20-008		S9	91420008	108/5	63,3	M12x1,5	T	30
	03.12 -		50	4	S90-4-25-022		S9	91425022	108/5	63,3	M12x1,5	§21	30
V50 (MW)													
	04.04 -		30	4	S90-4-15-005		S9	91415005	108/5	63,3	M12x1,5	T	27,5
	04.04 -		40	4	S90-4-20-008		S9	91420008	108/5	63,3	M12x1,5	T	27,5
	04.04 -		50	4	S90-4-25-022		S9	91425022	108/5	63,3	M12x1,5	T	27,5
V60													
	09.10 -	S1-1-14-50-33-19	20	2	S90-2-10-022			91610014	108/5	63,3	M14x1,5	T	35
	09.10 -	M14x1,5x33, KG60°	30	2	S90-2-15-048			91615011	108/5	63,3	M14x1,5	T	35
V70 I (LV)													
	11.96 - 11.00	S1-1-12-75-29-19	10	1	S90-1-05-020		S21	91105020	108/5	65	M12x1,75	T	28
	11.96 - 11.00	M12x1,75x29, KG60°	20	2	S90-2-10-012		S21	91210012	108/5	65	M12x1,75	T	28
	11.96 - 11.00		30	2	S90-2-15-016		S21	91215016	108/5	65	M12x1,75	T	28
V70 II (SW)													
	03.00 - 08.07	S1-1-14-50-33-19	10	1	S90-1-05-020		S21	91105020	108/5	65	M14x1,5	T	28
	03.00 - 08.07	M14x1,5x33, KG60°	20	2	S90-2-10-012		S21	91210012	108/5	65	M14x1,5	T	28
	03.00 - 08.07		30	2	S90-2-15-016		S21	91215016	108/5	65	M14x1,5	T	28
V70 III (BW)													
	08.07 -	S1-1-14-50-33-19	20	2	S90-2-10-022			91610014	108/5	63,3	M14x1,5	T	35
	08.07 -	M14x1,5x33, KG60°	30	2	S90-2-15-048			91615011	108/5	63,3	M14x1,5	T	35
V90 Kombi													
V90 Station Wagon	11.96 - 12.98	S1-1-12-75-29-19	10	1	S90-1-05-020		S21	91105020	108/5	65	M12x1,75	§21	
	11.96 - 12.98	M12x1,75x29, KG60°	20	2	S90-2-10-012		S21	91210012	108/5	65	M12x1,75	§21	
	11.96 - 12.98		30	2	S90-2-15-016		S21	91215016	108/5	65	M12x1,75	§21	
XC60 (D)													
	05.08 -	S1-1-14-50-33-19	20	2	S90-2-10-022			91610014	108/5	63,3	M14x1,5	T	40
	05.08 -	M14x1,5x33, KG60°	30	2	S90-2-15-048			91615011	108/5	63,3	M14x1,5	T	40
XC70 II (B)													
	08.07 -	S1-1-14-50-33-19	20	2	S90-2-10-022			91610014	108/5	63,3	M14x1,5	§21	
	08.07 -	M14x1,5x33, KG60°	30	2	S90-2-15-048			91615011	108/5	63,3	M14x1,5	§21	
XC70 CROSS COUNTRY													
	10.97 - 08.07	S1-1-14-50-33-19	10	1	S90-1-05-020		S21	91105020	108/5	65	M14x1,5	T	28
	10.97 - 08.07	M14x1,5x33, KG60°	20	2	S90-2-10-012		S21	91210012	108/5	65	M14x1,5	T	28
	10.97 - 08.07		30	2	S90-2-15-016		S21	91215016	108/5	65	M14x1,5	T	28
XC90													
	10.02 -	S4-1-14-50-33-19	30	2	S90-2-15-033			91215033	108/5	67	M14x1,5	T	19
	10.02 -	M14x1,5x33, KG60°	50	7	S90-7-25-017			91725017	108/5	67	M14x1,5	T	19
	10.02 -		60	7	S90-7-30-008			91730008	108/5	67	M14x1,5	T	19

HINWEISE

A - Allgemeine Hinweise	Wenn nicht gesondert aufgeführt, reduziert sich bei **Fahrzeugen, die ab Werk mit einem Sportfahrwerk** ausgestattet sind, die im Katalog angegebene Tieferlegung um das Maß der werkseitigen Tieferlegung. Wenn nicht gesondert aufgeführt, sind **Fahrzeuge, die ab Werk mit einem höhergelegten Fahrwerk** ausgestattet sind (z.B. Offroad-Charakter, Crossover oder Schlechtwegepakete), von der Verwendung unserer Produkte ausgeschlossen.
	Für die **Artikel- / Fahrzeugzuordnung** sind die Angaben im TÜV-Gutachten oder der ABE maßgeblich. Hierzu ist u.a. die EG-Betriebserlaubnisnummer (Punkt „K" im Fahrzeugschein oder auf dem Typenschild des Fahrzeugs zu finden!) mit den Angaben im Gutachten zu vergleichen.
	Bitte prüfen Sie vor der Montage mittels Teilegutachten / ABE, ob die gelieferten Artikel (siehe Teilekennzeichnung) für Ihr Fahrzeug (siehe Verwendungsbereich) zugelassen sind. Die aktuellen Teilegutachten / ABE´sen finden Sie unter www.eibach.com. Bei Abweichungen dürfen die Teile nicht eingebaut werden – bitte wenden Sie sich in diesem Fall an den Verkäufer.
	Wir empfehlen den **Einbau unserer Produkte nur in einer qualifizierten Werkstatt** durchführen zu lassen, die über entsprechendes geschultes Personal sowie die benötigten Spezialwerkzeuge verfügt.
	Die **Einbaulage** können Sie an der Bedruckung „ablesen" – lassen Sie die Feder so einbauen, dass Sie die Bedruckung lesen können. - Die Nummer darf nicht "auf dem Kopf stehen".
	Nach erfolgter Montage der Feder/Fahrwerkskomponenten ist zwingend eine **Überprüfung der Radeinstellwerte notwendig**.
	Sollten die Serienstoßdämpfer nicht mehr voll funktionsfähig sein und spürbar in ihrer Wirkung nachgelassen haben, empfehlen wir unbedingt den **Austausch gegen neue Serienstoßdämpfer oder Sportstoßdämpfer**.
	Bei **Sportline** Federn empfehlen wir den Einbau von Sportstoßdämpfern wie z.B. **Bilstein B8**.
	Es sind alle Räder/Reifenkombinationen verwendbar, die von den Rädertypprüfstellen freigegeben sind. Die **Auflagen im Rädergutachten bzw. Räder-ABE sind einzuhalten**, mit Ausnahme der Forderung nach Serienfahrwerk.
	Je nach Motorisierung, Getriebe, Ausstattung und Toleranzen des Fahrzeuges kann die Tieferlegung um einige mm von den angegebenen Werten abweichen. **Das Maß der Tieferlegung reduziert sich um das Maß der werkseitigen Tieferlegung.**
	Die Verwendbarkeit unserer Produkte bezieht sich auf serienbelassene Fahrzeuge. Bei Umbauten und Sonderzubehör (betrifft auch Serienzubehör!) wie z.B. dem Einbau einer Sonderbremsanlage (z.B. Keramik-Bremsanlage), Räder-Zentralverschluss, Sportfahrwerk, LPG-Anlage etc. können unsere Produkte u. U. nicht verwendet werden. **Die angegebenen Maße beziehen sich auf serienbelassene Neufahrzeuge.** Messpunkte: Senkrechter Abstand von Mitte der Radnabe bis zur Kotflügelunterkante. Grundsätzlich sind die angegebenen Maße Sollwerte, welche je nach Fahrzeug variieren können.
7.	Die werkseitig verbauten Federteller sind in den Stärken 8-23 mm in DB-Fachwerkstätten erhältlich. Hierdurch kann die hier angegebene Tieferlegung variiert werden.
9.	Bei Bereifung 205/50/15 und Felge 7 J x 15 - Empfehlung: Montage von bauartgleichen Sport-Gasdruckstoßdämpfern.
10.	Lieferung in Deutschland nur über besonderen Vertriebspartner. Bei Bedarf bitte Bezugsquelle bei unserer Zentralverwaltung anfragen.
12.	Nicht verwendbar bei werkseitiger Tieferlegung. (OE-Sportfahrwerk)
15.	Ohne Vollausstattung.
16.	Die hier berücksichtigte Sonderausstattung beinhaltet folgendes Punktesystem: Klimaanlage 7 Punkte Automatikgetriebe (4 + 5 Zyl.) 4 Punkte Automatikgetriebe (6 Zyl.) 2 Punkte Zusatzheizung 3 Punkte Schiebedach 2 Punkte ABS 2 Punkte Airbag 1 Punkt Scheinwerferreinigungsanlage 1 Punkt Motorschutz 1 Punkt Elektronische Sitzverstellung 2 Punkte Ergeben sich aus der Zusammenstellung der Zusatzausstattung mehr als 4 Zusatzpunkte, ist der Tieferlegungssatz für Fahrzeuge mit Sonderausstattung zu verwenden. Die Wahl der Gummiunterlagen ergibt sich aus der folgende Tabelle: Bis einschließlich 7 Punkte 8 mm (1 Noppe) Bis einschließlich 13 Punkte 13 mm (2 Noppen) Bis einschließlich 21 Punkte 23 mm (4 Noppen) Mehr als 21 Punkte Der Tieferlegungssatz ist nicht für diese Version geeignet.
18.	Außer Fahrzeuge mit Niveauregulierung.
19.	Bei Fahrzeugen mit 6-Zylinder-Motoren ist eine Umrüstung auf Sport-Dämpfer erforderlich.
20.	Außer Fahrzeuge mit Allrad-/4WD- Antrieb.
21.	Außer Fahrzeuge mit elektronisch geregelter Dämpferkraftverstellung.
22.	In Verbindung mit Eibach Federn oder Originalfahrwerk.
23.	Vorder- und Hinterachse höhenverstellbar durch Gewindefederbeine
24.	Vorderachse höherverstellbar durch Gewindefederbeine, Hinterachse durch Höhenverstelleinheit
25.	Um eine ausreichende Freigängigkeit zu gewährleisten, sind bei Verwendung der serienmäßigen Rad-/Reifenkombinationen ggf. Distanzscheiben erforderlich.
26.	Für eine Tieferlegung von mehr als 40 mm und einem Durchmesser der rechten Antriebswelle größer als 42 mm, muss eventl. der Serienstabilisator ausgetauscht werden. Der hier für erforderliche Stabilisatorsatz ist unter der Eibach Teile-Nr.: E40-85-005-01-10 im gut sortierten Fachhandel erhältlich.
28.	Nur für Fahrzeuge mit elektronischer Fahrstabilitätskontrolle
30.	Höhenverstellung nur im Bereich der im gemäß TÜV-Teilegutachten angegebenen Werte.
32.	Ausgenommen die Sondermodelle "Sportiv" und "Sport" (Fahrzeuge mit Bilstein-Dämpfer)
34.	Nur für Fahrzeuge mit einem Federbeindurchmesser an der Vorderachse von 55 mm
35.	Nur für Fahrzeuge mit einem Federbeindurchmesser an der Vorderachse von 50 mm
36.	Für Fahrzeuge mit EDC sind zusätzliche Anbauteile des KFZ-Herstellers notwendig: für die Vorderachse: BMW-Teile-Nr.: Domlager 31 331 091 709 + Scheibe 31 331 116 983 + Manschette 31 331 110 196 für die Hinterachse: BMW-Teile-Nr.: Stützlager 33 521 091 710 + Stütztopf 33 521 090 282 + Scheibe 33 521 092 986 + Schutzrohr 31 331 137 932 + Elastomere 33 531 091 031
37.	Nur Vorderachse höherverstellbar durch Gewindefederbeine, Hinterachse Federn + Dämpfer
38.	Nur Vorderachse höherverstellbar durch Gewindefederbeine, Hinterachse Dämpfer
39.	Bei Ausführungen ab Baujahr 04.2002 ist die Befestigung der Kolbenstange vertieft und durch eine Abdeckklappe verdeckt (Kolbenstangengewinde nicht sichtbar)
42.	Der federwegabhängige Bremsdruckregler an der Hinterachse muss gemäß den Vorgaben des Werkstatthandbuches überprüft und ggf. neu eingestellt werden.
44.	Die Dämpfer der HA sind durch die mitgelieferten Dämpfer auszutauschen.
45.	Gegebenenfalls sind für den Einbau der Fahrwerkskomponenten zusätzliche Originalteile erforderlich, die nicht im Lieferumfang enthalten sind. Bitte beachten Sie hierzu die entsprechenden technischen Dokumente (Teilegutachten, Einbauanleitung), die Sie auf unserer Homepage einsehen können.
47.	Die Dämpfer der HA sind durch konventionelle Dämpfer auszutauschen.
48.	Bei Fahrzeugen mit Niveaudämpfern (Kennzeichnung 2R oder 4R) an der HA müssen diese ausgewechselt werden gegen serienmäßige Dämpfer mit der Kennzeichnung 1U oder 3U, Teilenummer: 96 80 99 98, - Katalognummer 48 06 443.
49.	Nur für Fahrzeuge mit Allradantrieb!
50.	Nur für Fahrzeuge mit einem Klemmdurchmesser am Federbein an der Vorderachse von 51 mm
52.	Nur für Fahrzeuge mit Einblattfederung.
53.	Nur für Fahrzeuge mit Zweiblattfederung und Einblatt mit Unterlage.
54.	Bei Fahrzeugen mit Fahrzeugklasse M1G nur dann zulässig, wenn deren Fahrgeräusch 74 dB(A) nicht überschreitet. Die Fahrzeugklasse ist dann in M1 zu ändern.
56.	Bei Fahrzeugen mit kombiniertem Nebelscheinwerfer und Begrenzungsleuchte ist zu überprüfen, ob der untere Rand des Scheinwerfers tiefer als 350 mm über dem Boden liegt. Ist dies der Fall, so müssen zusätzliche Begrenzungsleuchten oberhalb dieses Maßes angebracht werden. Die serienmäßigen Begrenzungsleuchten sind dann durch Entfernen der Glühbirne und Lösen der Kabelverbindung außer Betrieb zu setzen.
58.	nicht geeignet für Modellvariante "Cross"
59.	Nur für Fahrzeuge mit folgenden Eigenschaften: VA: Stahlfeder, HA: Niveauregulierung.
60.	nicht geeignet für Ausführung Colt Rallyart ab 2009
61.	Federbeinbefestigung mit M14 Schraube (4-Loch Radbefestigung)
62.	Federbeinbefestigung mit M16 Schraube (5-Loch Radbefestigung)
63.	ab Nachtrag 14
65.	Bitte Fahrgestell-Nr. überprüfen: dieser Kit passt bei: 10.Stelle = Buchstabe (A, B, ...)
66.	für Ausführung 5-Sitzer
67.	für Ausführung 7-Sitzer
68.	Erhöhte Achslast bei Anhänger-Betrieb (siehe Teilegutachten).
69.	Liegt eine Einzel-Betriebserlaubnis vor, ist eine Abnahme nach §19/2 StVZO erforderlich.
71.	nicht geeignet für Ausführung 1.6 Racing (DS3)
73.	für Fahrzeuge mit Frontantrieb
74.	Serienfederteller muss benutzt werden
75.	ohne AC (ohne Klimaanlage)
76.	Dämpfer mit Bohrung für Gewindemaß M12
77.	Außendurchmesser Federbein vorne 45 mm
78.	Aufgrund der Verwendung der Gasdruck-Technologie der B6 / B8 Dämpfer kann das Maß der Tieferlegung fahrzeugspezifisch geringfügig abweichen.
79.	für Schraubenfeder mit Innendurchmesser 116 mm
80.	für Schraubenfeder mit Innendurchmesser 106 mm
81.	für Fahrzeuge ohne 3. Sitzreihe
82.	Abstand der Befestigungsbohrungen vorne: 58 mm
84.	nicht geeignet für Fahrzeuge mit Xenonlicht (kein Halter für Höhenstandsgeber der Leuchtweitenregulierung am Dämpfer)
85.	Dämpfer mit Bohrung für Gewindemaß M16
86.	für Ausführung mit kurzem Radstand
87.	nur für Fahrzeuge ohne Schlechtwegeausführung
88.	für Ausführung mit Standardfahrwerk
89.	Dämpfer mit Bohrung für Gewindemaß M10
90.	Dämpfer mit Bohrung für Gewindemaß M14
91.	Für Ausführungen mit Trommelbremse
92.	Für Ausführungen mit Scheibenbremse
93.	nur für Fahrzeuge mit Basisachse
94.	nur für Fahrzeuge mit Plusachse
95.	nur für verschraubte Federbeine
97.	nicht geeignet für Ausstattungsvariante 1BH - Schlechtwegepaket
98.	für Fahrzeuge mit Schraubenfederung
99.	Außendurchmesser Federbein vorne 47 mm

HINWEISE

101.	Bei Verwendung des Fahrwerks entfällt die Funktionalität der elektronischen Dämpferregelung. - Die im Bordcomputer angezeigte Fehlermeldung kann durch eine Vertragswerkstatt abgestellt werden.
102.	Für Wohnmobilausführungen
103.	bis Fahrgestellnummer: 200011 ; bis Fahrgestellnummer: 3B-YE121222
104.	bis Fahrgestellnummer: 3B-YE121221
106.	bis Fahrgestellnummer: 41999999
107.	bis Fahrgestellnummer: 48999999
108.	bis Fahrgestellnummer: 4B-Y-200000
109.	bis Fahrgestellnummer: 4D-Y-020000
110.	bis Fahrgestellnummer: 8D-1-030000
111.	bis Fahrgestellnummer: 8D-1-030001
112.	bis Fahrgestellnummer: 8D-X-200000
113.	bis Fahrgestellnummer: 8E-2-400 000
114.	bis Fahrgestellnummer: 8E-5-400 000
115.	bis Fahrgestellnummer: 8E-7-400 000
116.	bis Fahrgestellnummer: A394035
117.	bis Fahrgestellnummer: YS3ES55CD1
118.	Baumuster: Avantgarde
119.	Baumuster: Avantgarde, Elegance
120.	nicht Baumuster JC Works GP
121.	nicht Baumuster "iL"
122.	Baumuster: G02
123.	Baumuster: G02, GT, GTI
124.	Baumuster: G07, G08
125.	Baumuster: G07, G08, G09, G11
126.	Baumuster: G07, G08, G09, G11, GT, GTI
127.	Baumuster: G29, G30
128.	Baumuster: M 030
129.	Baumuster: M 033, außer M30 Turbo
130.	Baumuster: ohne EDC (elektronische Dämpferkontrolle)
131.	ab Fahrgestellnummer: 199008 bis 199209
132.	ab Fahrgestellnummer: 199210 ->
133.	ab Fahrgestellnummer: 3B-YE121222 ->
134.	ab Fahrgestellnummer: 4B-1-000001 ->
136.	ab Fahrgestellnummer: 4B-W-070001 bis 4B-Y-200000
137.	ab Fahrgestellnummer: 4D-1-000 001 ->
138.	ab Fahrgestellnummer: 51000001 ->
139.	ab Fahrgestellnummer: 8D-1-030000 bis 8D-W-006471
140.	ab Fahrgestellnummer: 8D-1-030001 ->
141.	ab Fahrgestellnummer: 8D-1-030001 -> ; ab Fahrgestellnummer: 200007 ->
142.	ab Fahrgestellnummer: 8D-W-006471 bis 8D-1-030000
143.	ab Fahrgestellnummer: 8D-X-200000 ->
144.	ab Fahrgestellnummer: 8D-X-200001 bis 8D-1-030000
145.	ab Fahrgestellnummer: 8E-2-400001 ->
146.	ab Fahrgestellnummer: 8E-5-400 001 ->
147.	ab Fahrgestellnummer: 8E-7-400 001 ->
148.	ab Fahrgestellnummer: A394035 ->
149.	ab Fahrgestellnummer: A394036 ->
150.	ab Fahrgestellnummer: F054768 ->
151.	ab Fahrgestellnummer: YS3ES55CD2 ->
153.	nicht für den Vertrieb in China (Taiwan)
154.	nur in Verbindung mit Bilstein Teile-Nr. 50-174546 - Bezug nur über Fa. Bilstein: mail: info@bilstein.de / Tel: +49 (0) 23 33 / 7 91-44 44
155.	nur in Verbindung mit BMW Teile-Nr. 31 32 1 139 423 (2x) - Bezug nur über BMW-Originalteilehandel. (Steinschlagschutz)
156.	nur in Verbindung mit BMW Teile-Nr. 31 33 1139 436 - Bezug nur über BMW-Originalteilehandel. (Stützlager)
159.	ohne EDC
160.	Bei Ersatzteilbedarf: Die Teilenummern der Einzelkomponenten entnehmen Sie bitte dem Gutachten unter dem Punkt "Berichtigung der Fahrzeugpapiere". Die Gutachten finden Sie unter www.eibach.com – Zum Eibach Fahrwerksprogramm - Online Katalog / Produkt- und Gutachtensuche (ROTER BUTTON)
161.	Bei Ersatzteilbedarf nehmen Sie bitte Kontakt zu Ihrem Händler / Bezugsquelle auf. - Halten Sie dazu Ihre Fahrzeugpapiere, Teilenummern und Kaufbelege bereit.
162.	Nicht für Ausführung "Caddy Maxi"
163.	Auch für Ausführung "LPG" (Gasanlage)
164.	nur in Verbindung mit BMW Teile-Nr. 33 50 6 778 572 (2x) - Bezug nur über BMW-Originalteilehandel. (Steinschlagschutz)
166.	Produktionsland: Großbritannien
167.	bis Fahrgestellnummer: 7L-9-045000
168.	Nur für Fahrzeuge mit PASM (elektronischer Dämpferregelung).
170.	Für Fahrzeuge mit Mehrlenker-Hinterachse (Einzelradaufhängung)
171.	Für Fahrzeuge mit Verbundlenker-Hinterachse (Starrachse)
174.	Nicht für Ausführung mit Federbein an der Hinterachse.
175.	Für Fahrzeuge mit elektronisch verstellbaren Dämpfern (Serienausstattung). PRO-TRONIC unterdrückt die Fehlermeldung/ Kontrollleuchte im Display nach dem Verbau von Sportstoßdämpfern/ Gewindefahrwerken (B12/PSS) ohne elektronisch verstellbare Dämpfer. Die Funktionalität der elektronischen Dämpfereinstellung entfällt.
176.	Für Fahrzeuge mit elektronisch verstellbaren Dämpfern (Serienausstattung). PRO-TRONIC unterdrückt die Fehlermeldung/ Kontrollleuchte im Display nach dem Verbau des Gewindefahrwerks (PSS). Die Funktionalität der elektronischen Dämpfereinstellung entfällt. Die PRO-TRONIC-Einheit ist im Satz enthalten.
177.	Für Fahrzeuge mit elektronisch verstellbaren Dämpfern (Serienausstattung) ist der PRO-TRONIC-Satz AM65-20-030-01-22 erforderlich! Diesen bitte zusätzlich bestellen.
178.	Für Ausführung "Crosstouran"
179.	Fahrzeuge der Kategorie M1G (Geländewagen) müssen als M1-Fahrzeuge (Personenkraftwagen) umgeschrieben werden.
180.	ab Fahrgestellnummer WAUZZZ8....11201
181.	für Fahrzeuge ohne AMG-Fahrwerk
182.	für Fahrzeuge mit AMG-Fahrwerk
183.	nicht für Ausführung "STI"
184.	Federteller muss unter Umständen getauscht werden. - Bei Satz E8530-140 muss der bestehende Federteller ggf. gegen Originalfederteller Nr: 1HO412341 getauscht werden. Bei Satz E8547-140 und E8550-140 muss der bestehende Federteller ggf. gegen Originalfederteller Nr: 357412341A getauscht werden.
185.	bis Fahrgestellnummer: KNEJC524875 644 788
186.	ab Fahrgestellnummer: KNEJC524875 644 789
188.	Baumuster: G01, G02, 0N4
189.	Baumuster: G01, G02, 0N1
190.	Baumuster: G03, G04, G05, G06, G07, 0N4
191.	Baumuster: G03, G04, G05, G06, G07, 0N1
192.	Nur für Fahrzeuge ohne PASM (elektronischer Dämpferregelung)
193.	Nur für Fahrzeuge ohne Luftfederung
194.	für Baumuster: ZFA, nicht für Baumuster 3C3 (USA)
195.	nicht für Baumuster 3C3 (USA)
196.	Dämpfer: VA: Länge: 564 mm, HA: Länge: 666 mm
197.	Dämpfer: VA: Länge: 543 mm, HA: Länge: 645 mm
198.	Durchmesser Stabilisator: 20 mm
199.	Durchmesser Stabilisator: 21 mm
200.	Baumuster: 0N9
201.	Baumuster: 04N
202.	Baumuster: G46, G57, G10
203.	für Fahrzeuge mit EDC (elektonische Dämpferkontrolle)
204.	Baumuster: G01, G04, 0N1
205.	Baumuster: G01, G04, 0N4
206.	Baumuster: G01, 0N1
207.	Baumuster: G01, 0N4
208.	Baumuster: G02, 0N1
209.	Baumuster: G02, 0N4
210.	Nur für Export, nicht in Deutschland erhältlich. - Nur ohne Teile-Gutachten!
211.	für Ausführung mit langem Radstand
212.	Nicht für "Nürburgring-Edition" (211 PS)
213.	Federeinrollung oben
215.	für Fahrzeuge ohne Serienzubehör "Offroadpaket"
216.	Kolbenstange Gewinde M12
217.	Kolbenstange Gewinde M14
218.	Lieferung in Deutschland nur über besonderen Vertriebspartner. Bei Bedarf bitte die Fa. Vmaxx GmbH & Co. KG , Tel.: 02103-334929, mail: info@vmaxx.de, Web: www.vmaxx.de kontaktieren.
219.	Nicht für Ausführung "Trailhawk"
220.	Nicht für Ausführung "2.0 R WRC"
221.	Wenn das Fahrzeug mit DCC (elektronische Dämpfer) ausgestattet ist, ist ein Austausch der Stützlager der Hinterachse gegen OE-Stützlager für Fahrzeuge ohne DCC erforderlich.
222.	Nicht für Ausführung „RS3"
223.	Nicht für Ausführung „OPC"

Hinweise Spurverbreiterungen

AS - Allgemeine Hinweise Pro-Spacer	Die Auflagen der fahrzeugspezifischen Gutachten sind zu beachten. Die Gutachten sind auf unserer Website **www.eibach.com** einsehbar.
	Allgemeine Hinweise zu Spurverbreiterungen: Unsere Spurverbreiterungen werden unter Berücksichtigung der Serienfelgen entwickelt. Bei der Verwendung von Zubehör- und Sonderfelgen, speziell bei Fahrzeugen mit Stehbolzen/Muttern-Befestigung ist zu prüfen, ob die entsprechenden Voraussetzungen an der Felge vorhanden sind (z.B. Aussparungen zur Aufnahme der Originalbolzen). Bei Umbauten und Sonderzubehör (Betrifft auch Serienzubehör!) wie z.B. dem Einbau einer Sonderbremsanlage, Räder-Zentralverschluss, Sportfahrwerk, LPG-Anlage etc. können unsere Produkte u. U. nicht verwendet werden. Ferner weisen wir darauf hin, dass je größer die Felgendimension wird, desto empfindlicher reagiert die Lenkung beim Verbau von Distanzscheiben im Bezug auf Vibrationen, die z.B. durch ungenau gewuchtete Räder entstehen können.
	§ 21-Abnahme - Distanzscheiben, die nicht im Teilegutachten eines Fahrzeugtyps benannt sind, aber dennoch auf diesem Fahrzeug verbaut werden können, müssen unter Berücksichtigung der Fahrzeugfestigkeit per Einzelabnahme in die Fahrzeugpapiere eingetragen werden (Einpresstiefengrenze nach der 2% bzw 4%-Regelung oder Nachweis einer gesonderten Fahrzeugfestigkeit). Hierzu kann das Teilegutachten eines anderen Fahrzeugtyps verwendet werden, wenn die entsprechenden Distanzscheiben in diesem Gutachten benannt werden. Vor dem Kauf sollte unbedingt mit einer geeigneten Prüfstelle die gewünschte Abnahme besprochen werden, um die Eintragungsvoraussetzungen und Kosten abzuklären.
	Distanzscheiben sollten immer nur von Hand montiert werden. - Auf die Verwendung eines elektrischen oder pneumatischen Schraubwerkzeuges sollte verzichtet werden, da dieses unter Umständen zu einem nicht optimalen Sitz der Distanzscheibe auf der Mittenzentrieung und somit zu unerwünschten Vibrationen im Fahrbetrieb führen kann.
	Bei Gutachten, die ein Erstellungsdatum ab März 2011 haben, ist die Verwendung von Stahlfelgen generell ausgeschlossen, sofern nicht anders im Gutachten vermerkt!

HINWEISE

	Vorhandene Zentrier- und Montagehilfen auf den Radanschlußflächen (Halteschrauben, -klammern und -ringe der Bremsscheiben bzw. -trommeln) sind zu entfernen.
S1	Bei Verwendung der Distanzscheibe ist darauf zu achten, dass die Felgen, bei Verwendung der 15 mm Distanzscheibe mindestens 14 mm tiefe und Gusstaschen / Aussparungen aufweisen, bei der 20 mm Distanzscheibe, mindestens 9 mm! (Bei Verwendung der 25 mm Distanzscheibe mindestens 4 mm!). Ist dies nicht der Fall, müssen die Originalradbolzen im Radträger gegen kürzere Bolzen getauscht werden (System 5, 6). Sonst ist eine Verwendung der Distanzscheiben nicht möglich.
S2	Außer Modell R5 (Tdi) - wg. LK 5/120
S3	Nur auf der Vorderachse verwendbar!
S4	Für Fahrzeuge mit (Zubehör-) Felgen ohne Gußtaschen bzw. Aussparungen zur Aufnahme der Original-Radbolzen.
S5	Verwendbar für Fahrzeuge mit einer Mittenzentrierung bis 17,5 mm Höhe.
S6	Nur auf der Hinterachse verwendbar!
S9	Bei Verwendung der Distanzscheiben ist darauf zu achten, dass die verwendeten Felgen über geeignete Gießtaschen / Aussparungen zur Aufnahme der überstehenden Originalradbolzen verfügen, da ohne diese Aussparungen ein Verbau der Felgen bzw. Verwendung der Distanzscheiben nicht möglich ist. Bitte insbesondere die überstehende Länge des Originalstehbolzens beachten. (Beispiel: Stehbolzenlänge 25 mm - Scheibenbreite 15 mm = 10 mm Überstand des Original-bolzens. Also sollte die Tiefe der Aussparung mindestens 11 mm betragen. Ferner muss die Höhe/Breite der Aussparung mindestens 22 mm betragen, um die überstehende Anschraubmutter aufnehmen zu können.) Ferner ist es erlaubt, überstehende Radbolzen mit einer Säge entsprechend zu kürzen. ACHTUNG: bei 15 mm Scheiben ist immer eine Aussparung von mindestens 7 mm Tiefe notwendig, da die Anschraub-Muttern über die Scheibenanlagefläche überstehen!
S10	Verwendbar für Fahrzeuge mit einer Mittenzentrierung bis 12,5 mm Höhe.
S11	Die Zentrierung der Felge ist nur über die Radschrauben möglich! Unter Umständen kann daher ein Auswuchten der Räder am Fahrzeug notwendig sein, um evtl. auftretende Vibrationen zu vermeiden.
S12	Aufgrund der Abstufung der Rad-Mittenzentrierung kann bei manchen Modellen eine Zentrierung der Distanzscheibe nicht gewährleistet werden.
S13	Bei einigen Modellen nur auf der Vorderachse verwendbar, da die Mittenzentrierung des Hinterachs-Radträgers zu lang ist. Verwendbar bis 16 mm Zentrierbundhöhe! Ab Produktionsnummer 161225 -> auch für VW UP!, Seat MII, Skoda Citigo Hinterachse, da maximal verwendbare Zentrierbundhöhe auf 17 mm geändert! (Prägung auf der Distanzscheibe beachten!)
S15	Bei Verwendung des Systems 3/7 können die Serienradschrauben zu lang sein. In diesem Fall müssen sie gegen kürzere Schrauben getauscht werden. Bitte verwenden Sie unsere Checkliste zur Angabe der Original-schraubendaten.
S16	Mazda / Nissan / Subaru / Hyundai-Fahrzeuge haben Modell-, achs- und baujahrabhängig unterschiedliche Rändelbolzen. Bitte prüfen Sie vor der Bestellung an beiden Achsen, welchen Rändeldurchmesser die Original-Rändelbolzen haben. In unseren Standardkits sind Rändelschrauben mit Rändeldurchmesser 14,9 mm (Subaru 14,3 mm) enthalten. Andere Rändeldurchmesser müssen bei der Bestellung angegeben werden!
S17	Verwendbar für Fahrzeuge mit einer Mittenzentrierung bis 16 mm Höhe.
S19	Bei Fahrzeugen mit Schiebetüren ist vorab die Verbaubarkeit der 25 mm / 30 mm Spurverbreiterung zu prüfen!
S20	Nicht zulässig für Fahrzeuge mit Leichtbaufahrwerk (Typ 6E, Lupo 3L Tdi, Lupo FSI)
S21	Ggf. ist der Lenkeinschlag zu begrenzen.
S22	In Verbindung mit Distanzringen sind 18 Zoll Rad-Reifenkombinationen nur dann zulässig, wenn diese für die Fahrzeugausführung bereits serienmäßig eingetragen sind.
S23	Nicht bei Verwendung von Stahlfelgen montierbar!
S24	Bei neueren Modellen kann die Mittenzentrierung größer als 54,1 mm Durchmesser sein. In diesem Fall ist eine Verwendung der Distanzscheibe nicht möglich.
S25	Bei einigen Turbomodellen aufgrund geänderter Mittenzentrierung der Vorderachse nicht verbaubar.
S26	Bei einigen Modellen nur auf der Vorderachse verwendbar, da die Fettkappe des Hinterachs-Radträgers zu weit aufbauen kann. Maximale Höhe der Mittenzentrierung incl. Fettkappe: 10 mm! Bitte vor der Bestellung prüfen!
S28	Die Originalradschrauben müssen bei der Verwendung des Systems 3/7 gegen kürzere Schrauben getauscht werden. Best-Nr. für Originalfelgen: S4-7-14-50-28-19. - Diese sind im Lieferumfang enthalten! Bei der Verwendung von Zubehörfelgen bitte die Checkliste ausfüllen!
S30	Radträger muss zum Austausch der Bolzen demontiert werden!
S32	Stehbolzen brauchen bei Verbau der Distanzscheibe nicht getauscht werden, da die erforderlichen Gewindegänge (Umdrehungen der Schraube/Mutter) den Erfordernissen des Gutachtens entsprechen.
S33	Die Original-Radbolzen müssen für den Verbau der Distanzscheiben gegen die mitgelieferten längeren Radbolzen getauscht werden. (Dieses sollte in einer Fachwerkstatt erfolgen, da bei manchen Fahrzeugen (z.B. neue Volvo/Ford/Kia-Modelle) hierfür die Demontage des Radträgers und/oder Radlagers notwendig ist.)
S34	Die Originalradschrauben müssen bei der Verwendung des Systems 3/7 gegen kürzere Schrauben getauscht werden. Best-Nr. für Originalfelgen: S1-1-14-50-30-17 (Im Lieferumfang enthalten!) Bei der Verwendung von Zubehörfelgen ist zu überprüfen, ob die Felgen mit den zugehörigen Schrauben befestigt werden können. - Ggf. sind kürzere Schrauben zu bestellen. Verwenden Sie bitte die Checkliste.
S35	Die Originalradschrauben müssen bei der Verwendung des Systems 3/7 gegen kürzere Schrauben getauscht werden. Best-Nr. für Originalfelgen: S4-1-14-50-28-19 (Im Lieferumfang enthalten!) Bei der Verwendung von Zubehörfelgen ist zu überprüfen, ob die Felgen mit den zugehörigen Schrauben befestigt werden können. - Ggf. sind kürzere Schrauben zu bestellen. Verwenden Sie bitte die Checkliste.
S37	Bei Verwendung der Distanzscheiben ist darauf zu achten, dass die verwendeten Felgen über geeignete Gießtaschen / Aussparungen zur Aufnahme der überstehenden Originalradbolzen verfügen. Sollte dies nicht der Fall sein, müssen die Originalradbolzen gegen die mitgelieferten kürzeren Radbolzen getauscht werden.
S38	Verwendbar für Fahrzeuge mit einer Mittenzentrierung bis 18 mm Höhe.
S39	Nicht verwendbar mit Serienalufelge (Verchromte Felge) ab Modelljahr 2005
S40	Nur für Modelle mit 3-geteilter Mittenzentrierung.
S41	Nicht in Verbindung mit US-Modell-Felge verwendbar, da diese nicht über entsprechende Aussparungen verfügt!
S43	Bei Baujahr vom 20-05-2002 bis 25-03-2004 bitte bei Bestellung für die Vorderachse 10 St. S3-0-12-50-52-143 mitbestellen!
S44	Bei Baujahr vom 20-05-2002 bis 25-03-2004 bitte bei Bestellung für die Vorderachse 10 St. S3-0-12-50-62-143 mitbestellen!
S45	Bitte beachten: Da Mercedes je nach verwendeter Originalfelge unterschiedlich lange Radschrauben einsetzt, ist es unbedingt notwendig zu prüfen, dass der Schaft der Schraube, nicht weiter als 20 mm aus Felge heraussteht. - Sollte dies der Fall sein, ist der Satz S90-2-20-007 mit entsprechend längeren Radschrauben zu verwenden. Oder es müssen zusätzlich kürzere Radschrauben zur Befestigung der Felge bestellt werden. In beiden Fällen benutzen Sie bitte die Checkliste!
S46	Dieser Kit enthält zusätzliche Radschrauben, die anstelle der Original-radschrauben verwendet werden müssen. Eine Befestigung der Felge mit den Originalradschrauben darf bei dieser Distanzscheibenbreite nicht erfolgen, da die Originalradschrauben zu lang sind und am Radträger anstossen würden.
S47	Die Originalradbolzen müssen gegen kürzere Bolzen getauscht oder entsprechend abgelängt werden.
S48	Ab Produktionswoche 24-2006 (Kennzeichnung 24E06 und folgende) auch für die Vorderachse zu verwenden! (Prägung auf der Distanzscheibe beachten!)
S49	Bei den Systemen 2 (S90-2-...) ist aufgrund der unterschiedlichen Serienlängen der Radschrauben in jedem Fall die Checkliste auszufüllen.
S50	Ab Produktionswoche 14-2006 (Kennzeichnung 14E06 und folgende) auch für die Vorderachse zu verwenden! (Prägung auf der Distanzscheibe beachten!)
S51	Ab Produktionswoche 21-2006 (Kennzeichnung 21E06 und folgende) auch für die Vorderachse zu verwenden! (Prägung auf der Distanzscheibe beachten!)
S52	Ab Produktionswoche 35-2006 (Kennzeichnung 35E06 und folgende) auch für die Vorderachse zu verwenden! (Prägung auf der Distanzscheibe beachten!)
S53	Nicht für AMG-Modelle!
S54	Bei einigen Modellen nur auf der Vorderachse verwendbar, da die Fettkappe des Hinterachs-Radträgers zu weit aufbauen kann. Maximale Höhe der Mittenzentrierung 13,5 mm! Bitte vor der Bestellung prüfen!
S56	Erst ab Herstelldatum 28E07 verwendbar! (Prägung auf der Distanzscheibe beachten!) Frühere Herstellung nicht mit Originalfelgen verbaubar!
S57	Da die Serienfelgen von Mercedes-Fahrzeugen je nach Felgentyp mit unterschiedlichen Schraubenlängen befestigt werden, ist es immer erforderlich, die Schaftlänge der verwendeten Schraube zu messen. Bitte die Checkliste verwenden!
S58	Bei Citroen- bzw. Peugeot-Fahrzeugen werden je nach verwendeter Felge unterschiedliche Schrauben zur Befestigung der Felge verwendet. Somit sollte vor Bestellung auf jeden Fall die Checkliste ausgefüllt werden!
S60	Da bei diesen Fahrzeugen die Mittenzentrierungsdurchmesser im Zehntelbereich variiren können, können die Distanzscheiben nur über die Radschrauben/-muttern zentriert werden.
S62	Karosseriearbeiten im Innenkotflügel notwendig!
S63	Ab Chargennummer 123634 (Produktion März 2008 - Prägung auf der Distanzscheibe beachten!) auch für die Hinterachse geeignet!
S66	Nicht zulässig für Fahrzeuge mit überstehenden Schraubenköpfen auf der Radanlagefläche, da diese auf keinen Fall demontiert werden dürfen.
S67	Bei der Verwendung der 20 mm System 7 Distanzscheiben ist vorab immer zu prüfen, ob die Radschraube weniger als 20 mm über die Radanlagefläche übersteht. - Ist das der Fall, sind die Radschrauben gegen geeignete kürzere Schrauben zu ersetzen. (Hierzu ist die Schraube in die Felge zu stecken und der Überstand der Schraube zu messen. - Siehe auch unsere Montageanleitungen!!)
S70	Außer Modell 390X - EG-Betriebserlaubnisnummer e1*2001/116*0344*.. in Ländern, in denen Gutachten erforderlich sind.
S71	Ab Produktionswoche 33-2010 (Kennzeichnung 146417 und folgende (Prägung auf der Distanzscheibe beachten!)) auch für die Vorderachse zu verwenden!
S72	Nur für Fahrzeuge mit Luftfederung und Niveauregulierung.
S73	Nur geeignet, wenn Außendurchmesser der Distanzscheibe größer als 165 mm. - Ab Produktionsnummer 161220 -> (Prägung auf der Distanzscheibe beachten!)
S74	Ab Chargennummer 170033 (Produktion November 2012 - Prägung auf der Distanzscheibe beachten!) auch für die Hinterachse geeignet, wenn die Fettkappe der Hinterachse entfernt und auf die Mittenzentrierung der Distanzscheibe gesteckt wird!
S75	Ab Chargennummer 172158 (Produktion Februar 2013 - Prägung auf der Distanzscheibe beachten!) auch für die Hinterachse geeignet, wenn die Fettkappe der Hinterachse entfernt und auf die Mittenzentrierung der Distanzscheibe gesteckt wird!
S76	Ggf. muss die Abdeckung der Mittenzentrierung (Fettkappe) entfernt werden.
S77	Die Abdeckung der Mittenzentrierung (Fettkappe) muss vom Radträger gelöst und auf die Distanzscheibe aufgesteckt werden.
S78	Die Mittenzentrierung wird durch Verwendung des mitgelieferten Zentrierrings verlängert. Die Fettkappe muss von Radträger gelöst und auf den Zentrierring aufgesteckt werden.

INSTRUCTIONS

A - Common Notes	*If not separately named, for vehicles with **OE-lowered suspension**, the dimension of lowering is reduced by the dimension of lowering carried out by manufacturer. If not separately named, vehicles with **OE-lifted suspension** (e.g. Offroad-Package, Crossover) are excluded from use of our products.*
	The specifications indicated in the TÜV approval are for the classification of the item / vehicle. Please check the type approval number of your car and compare with the homologation. (Letter "K" in your vehicle registra-tion certificate or to find at the type plate of your car!)
	Please verify before fitting by means of TÜV certificate whether the delivered items (please see marking) are approved for your vehicle (please see area of use).You can find the current TÜV approval on www.eibach.de
	In case of non-conformance the items must not be fitted – please refer to your dealer.
	Mounting - we recommend to have our spring system installed by a qualified workshop only, that has skilled personnel and the required special tools available.
	Mounting position - you can "read" the mounting position of the springs from the imprint - have them installed just the way you read the imprint.
	Wheel adjustment - after completion of the spring/suspension installation, checking the wheel adjustment is required.
	Shock absorbers - if the standard shock absorbers are not fully operative anymore and their efficiency has worn off considerably, we strongly recommend to replace those by new standard shock absorbers or by sports shock absorbers.
	The installation of Sport-Shock Absobers is recommended. As example Bilstein B8
	Here all wheel/tyre-combinations are possible, which are released by the wheel type testing institution. The instructions in the wheel approval have to be adhered to, except for: OE suspension is required.
	Depending on engine, gearbox/transmission, equipment and vehicle tolerances lowering may differ from the values given. The dimension of lowering is reduced by the dimension of lowering carried out by manufacturer.
	The applicability of our products deals with standard cars. In any case of reconstruction (even with OE-accessory-parts), as the installation of an accessory-brake-system (e.g. ceramic-brakes), sport-suspension, LPG-(liquefied petroleum gas)-system for example, the usage of our products may be excluded. The stated measurements are referring to new standard cars. Measuring points: vertical distance from the middle of the wheel hub to the bottom edge of the mud wing. Generally the stated measurements are nominal values, which can vary depending on every car.
7.	*The spring plates installed by the manufacturer are available at DB specialist workshops in sizes 8-23 mm. This allows to vary the lowering indicated here.*
9.	*For tyre equipment 205/50/15 and rim 7J x 15. Recommendation: installation of sports gas pressure shock absorbers of similar construction.*
10.	*Part number is available only from our special distributor. Please ask for availability and price.*
12.	*For vehicles, not lowered by manufacturer. (OE-sport suspension)*
15.	*Not fully equipped.*
16.	*The special equipment mentioned below contents following point system:* *air-condition* 7 points *automatic-transmission (4+5 Cyl.)* 4 points *automatic-transmission (6 Cyl.)* 2 points *independent car heating* 3 points *sunroof* 2 points *ABS* 2 points *Airbag* 1 point *headlamp cleaning system* 1 point *engine skid plate* 1 point *electronic seat adjustment* 2 points *IF THE RESULT IS MORE THAN 4 POINTS ONE HAS TO CHOICE* *up to 7 points* 8 mm (1 point rubber plate) *up to 13 points* 13 mm (2 point rubber plate) *up to 21 points* 23 mm (4 point rubber plate) *More than 21 points the lowering Kit is for this version not possible*
18.	*Without levelling control.*
19.	*Vehicles with 6 cylinder engine require retrofit with sports shocks.*
20.	*Except vehicels with 4WD.*
21.	*Except electronic suspension systems.*
22.	*In combination with Eibach suspension springs or original suspension.*
23.	*Front and rear axle height adjustable by threaded strut.*
24.	*Front axle height adjustable by threaded strut, rear axle by height adjustable unit.*
25.	*In order to ensure sufficient clearance it may be necessary to use wheel spacers if the car is equipped with original wheel sizes.*
26.	*When the car is lowered more than 40 mm in combination with a drive shaft diameter more than 42 mm, the original equiped front stabilizer bar has to be replaced by the EIBACH Anti-Roll-Kit part.-no. E40-85-005-01-11.*
28.	*Only for vehicels with electronic drive-balance-control.*
30.	*Height adjustment only according the measurements indicated in the TÜV-certificate.*
32.	*Except models "Sportive" and Sport (models were are equipped with Bilstein shock absorbers)*
34.	*Only for vehicles with front damper diameter of 55 mm*
35.	*Only for vehicles with front damper diameter of 50 mm*
36.	*For vehicles with EDC additional fitting parts of the manufacturer is necessary: front: BMW-Part-No.: top mount assembly (31 331 091 709 + 31 331 116 983 + 31 331 110 196) rear: BMW-Part-No.: top mount assembly (33 521 091 710 + 33 521 090 282 + 33 521 092 986 + 31 331 137 932 + 33 531 091 031)*
37.	*Only front axle height ajustable, rear axle spring and shock absorber*
38.	*Only front axle height ajustable, rear axle shock absorber*
39.	*For models from 04.2002 onwards the fixation of the piston rod is deepened and covered through a flap (piston rod thread not visible)*
42.	*The spring travel dependent brake-pressure regulator at the rear axle has to be inspected and, if necessary, adjusted according to the workshop manual.*
44.	*The original rear dampers have to be replaced by the supplied dampers.*
45.	*In some cases additional OE-Parts for the installation of the suspension components are required. Therefore please take a look at the corresponding technical documents which are available on our website.*
47.	*The original rear dampers have to be replaced by conventionally dampers.*
48.	*In the case of vehicle models with ride height control dampers (mark 2R or 4R) these must be changed to O.E. dampers with mark 1U or 3U, part number: 96 80 99 98, catalogue number: 48 06 443.*
49.	*For vehicles with 4WD only!*
50.	*Only for vehicles with 51 mm front strut clamp.*
52.	*Only for vehicles with single leaf spring.*
53.	*Only for vehicles with double leaf spring and single leaf with distance part.*
54.	*Not for vehicles with ride-height control system. For vehicles with Off-Road Classification only allowed with pass-by-noise less than 75 dB(A) and change of classification to M1.*
56.	*Vehicles with combined fog- and running lights have to be checked whether the height of the lower edge of the light is not closer than 350 mm to the ground. In this case additional running lights have to be mounted higher thand 350 mm. The original running lights have to be decomissioned by removing the bulbs an the cable connection.*
58.	*not suitable for model "Cross"*
59.	*Only for vehicles with following characteristics: front axle: steel spring, rear axle: levelling control*
60.	*excluded Colt Rallyart up to 2009*
61.	*strut fixing with screw M14 (4-hole wheel attachement)*
62.	*strut fixing with screw M16 (5-hole wheel attachement)*
63.	*from supplement 14*
65.	*Please check your VIN: this kit fits: 10th character=letter (A, B, ...)*
66.	*for 5-Seater*
67.	*for 7-Seater*
68.	*Increased axle-load when using trailer (see TÜV approval).*
69.	*If a national individual type approval exist, it is necessary to approve a modification acceptance according to §19/2 StVZO.*
71.	*without type: 1.6 Racing (DS3)*
73.	*front wheel drive*
74.	*original spring plate must be used*
75.	*without AC (Air-Condition)*
76.	*thread dimension: M12*
77.	*outer diameter front strut 45 mm*
78.	*Due to the usage of gas pressure technology of the B6 / B8 dampers the dimension of lowering may vary slightly vehicle-specifically. Functionality of electronic dampers is not applicable. - If available, we recommend to use Pro-Tronic.*
79.	*coilspring inner diameter 116 mm*
80.	*coilspring inner diameter 106 mm*
81.	*without 3. row of seats*
82.	*distance between fixing holes front 58 mm*
84.	*not available for vehicles with xenon headlights (any mounting for the self-levelling headlamp system at the dampers)*
85.	*thread dimension: M16*
86.	*short wheel-base*
87.	*without off-road type*
88.	*standard suspension*
89.	*thread dimension: M10*
90.	*thread dimension: M14*
91.	*with drum brake*
92.	*with disk brake*
93.	*only for vehicles with base axle*
94.	*only for vehicles with plus axle*
95.	*only for struts, which are screwed together*
97.	*without 1BH (Off road package)*
98.	*with coil spring suspension*
99.	*outer diameter front strut 47 mm*
101.	*Once B12 kit is installed the electronic damper control will not be available anymore. You will see a trouble code. This can be re-programed by an official garage/dealership. If available for your vehicle, we recommend to use Pro-Tronic to avoid the trouble code.*
102.	*For campmobiles*
103.	*up to chassis number: 200011 ; up to chassis number: 3B-YE121222*
104.	*up to chassis number: 3B_YE121221*
106.	*up to chassis number: 41999999*
107.	*up to chassis number: 48999999*
108.	*up to chassis number: 4B-Y-200000*
109.	*up to chassis number: 4D-Y-020000*
110.	*up to chassis number: 8D-1-030000*
111.	*up to chassis number: 8D-1-030001*

INSTRUCTIONS

112.	up to chassis number: 8D-X-200000
113.	up to chassis number: 8E-2-400 000
114.	up to chassis number: 8E-5-400 000
115.	up to chassis number: 8E-7-400 000
116.	up to chassis number: A394035
117.	up to chassis number: YS3ES55CD1
118.	for type: Avantgarde
119.	for type: Avantgarde, Elegance
120.	except type: JC Works GP
121.	except tpye: "iL"
122.	for type: G02
123.	for type: G02, GT, GTI
124.	for type: G07, G08
125.	for type: G07, G08, G09, G11
126.	for type: G07, G08, G09, G11, GT, GTI
127.	for type: G29, G30
128.	for type: M 030
129.	for type: M 033, except type M30 Turbo
130.	for type: without EDC (electronic damper control)
131.	from chassis number: 199008-> 199209
132.	from chassis number: 199210 ->
133.	from chassis number: 3B-YE121222 ->
134.	from chassis number: 4B-1-000001 ->
136.	from chassis number: 4B-W-070001-> 4B-Y-200000
137.	from chassis number: 4D-1-000 001 ->
138.	from chassis number: 51000001 ->
139.	from chassis number: 8D-1-030000-> 8D-W-006471
140.	from chassis number: 8D-1-030001 ->
141.	from chassis number: 8D-1-030001 ->;from chassis number: 200007 ->
142.	from chassis number: 8D-W-006471-> 8D-1-030000
143.	from chassis number: 8D-X-200000 ->
144.	from chassis number: 8D-X-200001-> 8D-1-030000
145.	from chassis number: 8E-2-400001 ->
146.	from chassis number: 8E-5-400 001 ->
147.	from chassis number: 8E-7-400 001 ->
148.	from chassis number: A394035 ->
149.	from chassis number: A394036 ->
150.	from chassis number: F054768 ->
151.	from chassis number: YS3ES55CD2 ->
153.	not for distribution in China (Taiwan)
154.	only in combination with Bilstein Teile-Nr. /part-no. AC0-H454 - only available at Bilstein: mail: info@bilstein.de / Tel: +49 (0) 23 33 / 7 91-4444
155.	only in combination with BMW part-no. 31 32 1 139 423 (2x) - only available as BMW-OE-parts (stoneguard)
156.	only in combination with BMW part-no. 31 33 1139 436 - only available as BMW-OE-parts (top mount)
159.	without EDC
160.	If replacement required: You will find the components in the homologation under the point "Amendment of the vehicle documents". The homologation can be downloaded on: www.eibach.com - click on British flag - Online Catalog / Product & Homologation Search (RED BUTTON)
161.	If replacement required: Please contact your dealer. - Please have your car documents, part numbers and sales receipt ready to give detailed information.
162.	Not for "Caddy Maxi"
163.	"LPG-(liquefied petroleum gas)-system"-engines included!
164.	only in combination with BMW part-no. 33 50 6 778 572 (2x) - only available as BMW-OE-parts (stoneguard)
166.	Land of production: Great Britain
167.	up to chassis number: 7L-9-045000
168.	Only for cars with PASM (electronic damper control).
170.	For cars with independent suspension at the rear axle.
171.	For cars with rear live axle.
174.	Not for suspension strut at the rear axle.
175.	For vehicle with electronic damper control. (Series). PRO-TRONIC suppresses the error message after installaton of dampers or coil-overs (B12/PSS) without electronic adjustable dampers. The functionality of electronic damper control is not applicable.
176.	For vehicle with electronic damper control. (Series). PRO-TRONIC suppresses the error message after installation of the coil-over-suspension (PSS). The functionality of electronic damper control is not applicable. The kit includes the PRO-TRONIC-unit.
177.	Vehicle with electronic damper control (Series) require the PRO-TRONIC-unit AM65-20-030-01-22. Please order separately.
178.	For „Crosstouran"
179.	Vehicles of the category M1G (Offroad) must be reclassified as M1.
180.	from chassis number: WAUZZZ8....11201
181.	for vehicles without AMG-suspension
182.	for vehicles with AMG-suspension
183.	not for „STI"
184.	Spring plate may be changed! - Kit E8530-140 may require OE-Spring-Plate No. 1HO412341. Kits E8547-140 and E8550-140 may require OE-Spring-Plate No. 357412341A.
185.	up to chassis number: KNEJC524875 644 788
186.	from chassis number: KNEJC524875 644 789
188.	for type: G01, G02, 0N4
189.	for type: G01, G02, 0N1
190.	for type: G03, G04, G05, G06, G07, 0N4
191.	for type: G03, G04, G05, G06, G07, 0N1
192.	Only for vehicles without PASM (electronic damper control).
193.	Only for vehicles without air suspension.
194.	for type: ZFA, not for type 3C3 (USA)
195.	not for type 3C3 (USA)
196.	Damper length: FA: 564 mm, RA: 666 mm
197.	Damper length: FA: 543 mm, RA: 645 mm
198.	Stabilizer diameter 20 mm
199.	Stabilizer diameter 21 mm
200.	for type: 0N9
201.	for type: 04N
202.	for type: G46, G57, G10
203.	for vehicles with EDC (electronic damper control)
204.	for type: G01, G04, 0N1
205.	for type: G01, G04, 0N4
206.	for type: G01, 0N1
207.	for type: G01, 0N4
208.	for type: G02, 0N1
209.	for type: G02, 0N4
210.	Only Export - not available in Germany - only without homologation!
211.	long wheel base
212.	Not for „Nürburgring-Edition" (211 HP)
213.	Pigtail-end above
215.	for vehicles without „OE Offroadpackage"
216.	piston rod - thread M12
217.	piston rod - thread M14
218.	Part number is available only from our special distributor. Please ask for availability and price. Contact: Vmaxx GmbH & Co. KG , phone: +49(0)2103-334929, mail: info@vmaxx.de, web: www.vmaxx.de
219.	Not for „Trailhawk"
220.	Not for „2.0 R WRC"
221.	Rear axle mount has to be changed if vehicle has DCC (electronic damper control) - Please use OE spare parts for vehicle without DCC (electronic damper control).
222.	Not for „RS3"
222.	Not for „OPC"
	Notes Wheelspacer
AS	You have to consider the requirements of the homologation. Homologation-requirements are available at www.eibach.com
Common Note Wheelspacers	Our wheelspacers are produced in consideration of the original wheels. When using acessory- or specialwheels, you have to check, if these wheels comply with the necessary requirements. Expecially on cars with studs/nuts. Further we point out, that the larger the wheelsize is, the sensitively reacts the steering in relation to vibrations. (Often caused by badly balanced wheels.) In any case of reconstruction (even with OE-accessory-parts), as the installation of an accessory-brake-system (e.g. ceramic-brakes), sport-suspension, LPG-(liquefied petroleum gas)-system for example, the usage of our products may be excluded.
	§ 21-acceptance - In Germany and other European states it is necessary to approve wheelspacers by a TÜV-organisation. If this is necessary in your country, please contact your nearest test center to get more information about requirements and costs.
	Wheelspacers always should be mounted by hand. - Don´t use electric or pneumatic tools as this could cause vibrations because of misfit on the wheelhub.
	From March 2011 the use of steel wheels in combination with Pro-Spacer-wheelspacers is prohibited if not especially allowed by the homologation.
	Existing center- and assembling-aids at the wheel hub have to be removed. (e.g. fixing bolts, clamps or rings of the brake disk or -drum)
S1	When using 15 mm wheelspacers there at least have to be 14 mm minimum cut-outs in the wheel to take up the original bolts (when using 20 mm spacers 9 mm minimum cut-outs, when using 25 mm spacers 4 mm minimum cut-outs). If this isn´t the case shorter bolts must be used. (System 5, 6) Otherwise the use of the spacers is not allowed.
S2	Except for model R5 (Tdi) - because of bolt pattern 5/120
S3	Only for use on the front axle!
S4	For vehicles with (accessory) wheels without cut-outs.
S5	For vehicles with a centre stud height up to 17,5 mm.
S6	Only for use on the rear axle!
S9	When using the wheelspacers you have to verify that the wheels being used have suitable cut-outs to take up the original bolts. Without these cut-outs it is not possible to use the wheels or wheelspacers! Please check as follows: Stud length (e. g. 25 mm) minus spacer-thickness (e .g. 15 mm) = 10 mm exess length. So the cut out should have 11 mm depth to take the original stud. Further the cut out should have minimum 22 mm x 22mm height/width to take the overlaping nut. ATTENTION: when using 15 mm spacers at least 7 mm deep cut-outs are needed as the nuts stand over the contact surface!
S10	For vehicles with a centre stud height up to 12,5 mm.
S11	The centering of the wheel is only possible with the wheelbolts! Therefore, it can be necessary to do a wheel balancing on the car, to avoid possible vibrations.
S12	Due to the gradation of the wheel centre, a centering of the wheelspacer cannot be guaranteed with some models.

INSTRUCTIONS

S13	With some models, it is only for use on the front axle as the centering of the wheel stud on the rear axle is too long. Fits up to 16 mm centre bore height! From production-No# 161225 -> (Please note the printing on the spacer!) also suitable for VW UP!, Seat MII, Skoda Citigo rear axle as changed to 17 mm centre bore height!
S15	When using system 3/7 (50 mm), the original wheel bolts can be too long. In this case, they must be changed to shorter bolts.
S16	Mazda / Nissan / Subaru have various wheel studs that are dependant on the model, axle or year they were built in. Before ordering, please check on both axles, what knurl diameter the original wheel studs have. In our kits, we include wheel studs with a knurl diameter of 14,9 mm (14,3 mm for Subaru). Other knurl diameter sizes need to be indicated when ordering!
S17	For vehicles with a centre stud height up to 16 mm.
S19	For vehicles with sliding doors, it needs to be checked if wheelspacers of 25 mm / 30 mm can be installed.
S20	Not permitted for vehicles with a lightweight suspension (Type 6E, Lupo 3L Tdi, Lupo FSI)
S21	The steering angle possibly needs to be limited.
S22	In combination with spacer rings, an 18-inch wheel/rim- combination is only permitted if the wheel has been already approved by the TÜV as original equipment.
S23	Not permitted for vehicles with steel wheels!
S24	With newer models, the centre stud can be more than 54,1 mm diameter. In this case, the wheelspacer cannot be used.
S25	Cannot be installed with some Turbo-models due to a changed centre stud.
S26	With some models, it can only be used on the front axle as the grease-cap of the rear axle wheel carrier can stick-out too wide. The maximum height of the centre stud including the grease-cap is 10 mm!
S28	When using system 3/7, the origial screws have to be changed against shorter screws. Item-No for the use with original wheels: S4-7-14-50-28-19. When using acessory wheels, please fill out the Checklist.
S30	The wheelcarrier has to be disassembled for changing the stud bolts.
S32	Stud bolts needn´t be changed.
S33	The original stud bolts must be changed. Longer stud bolts are enclosed in the kit. At some cars (e.g. Ford, Kia, Volvo) it´s necessary to disassemble the wheeltrunk and/or the wheel bearing. This only should be done by your garage.
S34	When using system 3/7, the origial bolts have to be changed against shorter bolts. Item-No for the use with original wheels: S1-1-14-50-30-17. (Included in delivery) If using accessory wheels you have to check the mount of the wheels. If necessary you have to order shorter bolts. Please use our checklist.
S35	When using system 3/7, the origial screws have to be changed against shorter screws. Item-No for the use with original wheels: S4-1-14-50-28-19 (Included in delivery) If using accessory wheels you have to check the mount of the wheels. If necessary you have to order shorter bolts. Please use our checklist.
S37	When using the wheelspacers you have to verify that the wheels being used have suitable cut-outs to take up the original bolts. Without these cut-outs it is necessary to use the delivered studs in exchange to the original studs!
S38	For vehicles with a centre stud height up to 18 mm.
S39	Not for use with 2005 standard-wheel (chrome-plated)
S40	Only for use on models with tripartite center hub.
S41	Not for use on models with US-Wheels, as these wheels don´t have the necessary cut-outs!
S43	Year 20-05-2002 to 25-03-2004 please order 10 pc. S3-0-12-50-52-143 seperately when using for the front axle!
S44	Year 20-05-2002 to 25-03-2004 please order 10 pc. S3-0-12-50-62-143 seperately when using for the front axle!
S45	Please Note: As Mercedes uses different bolts you have to check that the bolt when put in the wheel mustn´t stand over more than 20mm. If this is the case you eighter have to use S90-2-20-007 with longer bolts, or you have to order shorter bolts for fixing the wheel. In both cases please use the checklist!
S46	This Kit includes additional wheelbolts to fix the wheel. When using this kit you have to use these wheelbolts as the original bolts are too long to fix the wheel.
S47	The original bolts have to be changed against shorter bolts or cut to length.
S48	Also for front axle use from production date 24-2006 (Marking 24E06 - Please note the printing on the spacer!)
S49	When using System 2 (S90-2-...) you always have to fill out the checklist because of different original bolts length used on this car.
S50	Also for front axle use from production date 14-2006 (Marking 14E06 - Please note the printing on the spacer!)
S51	Also for front axle use from production date 21-2006 (Marking 21E06 - Please note the printing on the spacer!)
S52	Also for front axle use from production date 35-2006 (Marking 35E06 - Please note the printing on the spacer!)
S53	Not for AMG-Models!
S54	With some models, it can only be used on the front axle as the grease-cap of the rear axle wheel carrier can stick-out too wide. The maximum height of the centre stud 13,5mm!
S56	Only to use from production date 28-2007 (Marking 28E07 - Please note the printing on the spacer!) . Earlier dates don´t fit the original wheels!
S57	Mercedes OEM wheels may use different bolt length. Therefore you have to examine, what bolt length is used. Please fill out the checklist!
S58	Citroen, Peugeot vehicles use different OEM wheels with different bolts. It´s necessary to check what bolts are used even if OEM wheels are used. Please fill out the checklist!
S60	As the diameter of the center stud can vary, the wheelspacers only can be centered by the studbolts/nuts.
S62	It´s necessary to modify metal parts of the inner wheel arch!
S63	With charge 123634 (production March 2008 - Please note the printing on the spacer!) also usable for the rear axle.
S66	Not for vehicels with overstanding boltheads on the wheeltrunk, as these bolts mustn´t be dismounted.
S67	When using 20 mm System 7 spacers the wheelbolts mustn´t stand over more than 19,5 mm out of the wheelhub. If this is the case the bolts have to be replaced with shorter bolts. (Please follow our installation instruction!!)
S70	Except Model 390X - EC-type approval No. e1*2001/116*0344*... for countries with homologation required.
S71	Also for front axle use from production date 33-2010 (Marking 146417 and following - Please note the printing on the spacer!)
S72	Only for cars with Air-ride and levelling control
S73	Only suitable if outer spacer diameter >165mm. - Suitable from production-no.# 161220 -> (Please note the printing on the spacer!)
S74	With charge 170033 (production November 2012 - Please note the printing on the spacer!) also usable for the rear axle, if grease cap directly used on the center hub of the spacer.
S75	With charge 172158 (production February 2013 - Please note the printing on the spacer!) also usable for the rear axle, if grease cap directly used on the center hub of the spacer.
S76	If necessary, the grease cap has to be removed.
S77	Grease cap has to be removed from the hub and mounted to the wheelspacer-hub.
S78	The hub will be enlarged by monting the centering ring. The grease cap has to be removed from the hub and mounted to the centerring ring.

Ihr Händler | Your Local Dealer

PRODUCTION PLANTS

Europe
Germany
Heinrich Eibach GmbH
Am Lennedamm 1
57413 Finnentrop
Phone: +49 27 21 - 5 11-342
Fax: +49 27 21 - 5 11-49 101
e-Mail: sales@eibach.de
Motorsports Requests:
Phone: +49 27 21 - 5 11-344

North America
USA
Eibach Springs, Inc.
264, Mariah Circle
Corona, CA 92879-1751
Phone: +1 951 256 - 83 00
Fax: +1 951 256 - 83 33
e-Mail: eibach@eibach.com

Asia
China
Eibach Asia Center
Eibach Springs Taicang Ltd.
No. 63 Ningbo Road
Taicang, Jiangsu
China, 215400
Phone: +86 512 8278 1666
Fax: +86 512 8278 1660
e-Mail: eibach@eibach-china.com

ENGINEERING & SALES

Australia
Eibach Suspension Technology P.T.Y. Ltd.
3 | 4 Prosperity Parade
Warriewood NSW 2102
Phone: +61 2-99 99-36 55
Fax: +61 2-99 99-38 55
e-Mail: eibach@eibach.com.au

South Africa
Eibach South Africa P.T.Y. Ltd.
P.O. Box 2495
North End 6045
Port Elizabeth
Phone: +27 41 - 4 51 53 11
Fax: +27 41 - 4 53 42 74
e-Mail: sales@eibachsa.co.za

United Kingdom
Eibach UK
25, Swannington Road
Broughton Astley
Leicestershire LE9 6TU
Phone: +44 14 55 - 285 850
Fax: +44 14 55 - 285 853
e-Mail: sales@eibach.co.uk

EPS-23-EU
Artikelnummer | Partnumber: S9950102-2016

eibach.com